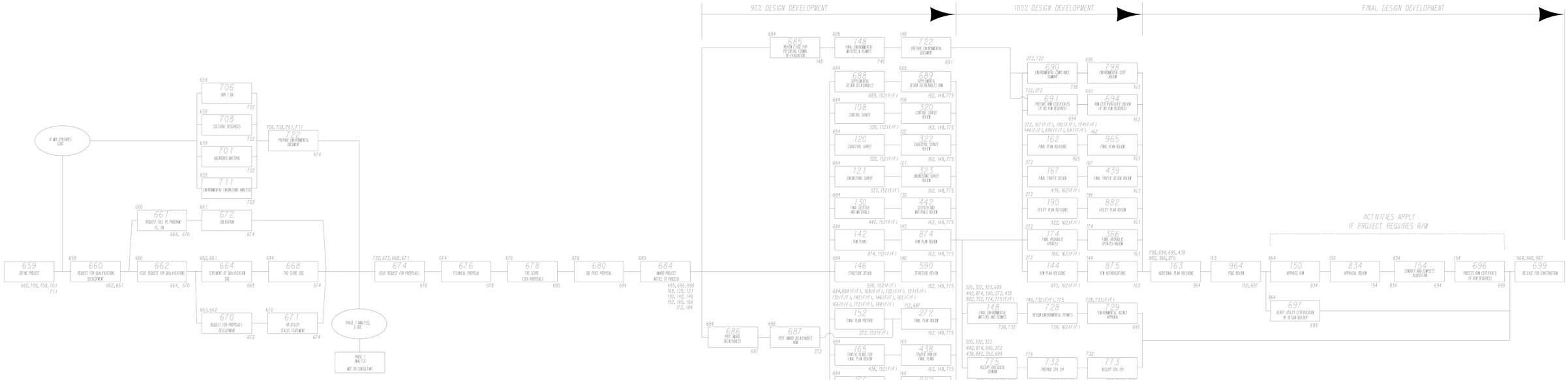

DESIGN BUILD FLOWCHART

REVISED		
REVISED		
REVISED		
REVISED		

MDT MONTANA DEPARTMENT OF TRANSPORTATION

MONTANA CADD

DESIGNED BY	J. PAYSEK	8-31-20
DRAWN BY	E. MILLER	9-1-20
CHECKED BY	D. REYNOLDS	9-2-20
APPROVED BY		

E:\SSABPR\001.DGN
9/4/2020 PM
4:22:02 PM
u6532