COLSTRIP

7/18/06

R-1, overview

T-2, crack detail

R-1, high crack detail

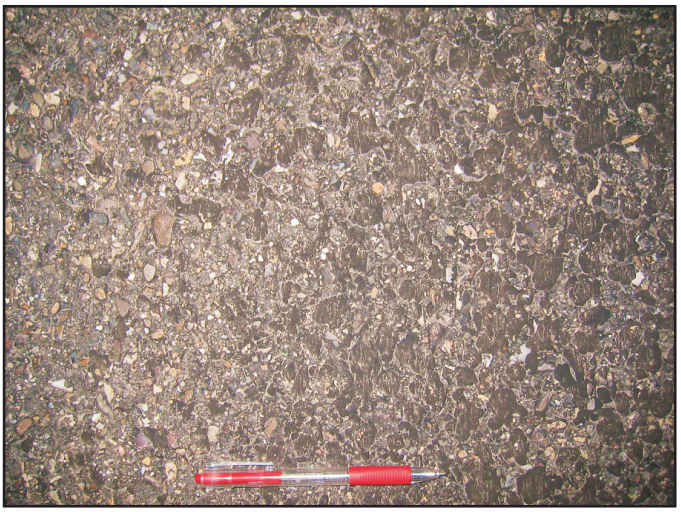

R-1, bleeding surface detail

COLSTRIP

7/18/06

A-1, overview with bleeding

T-1, overview with bleeding

COLSTRIP

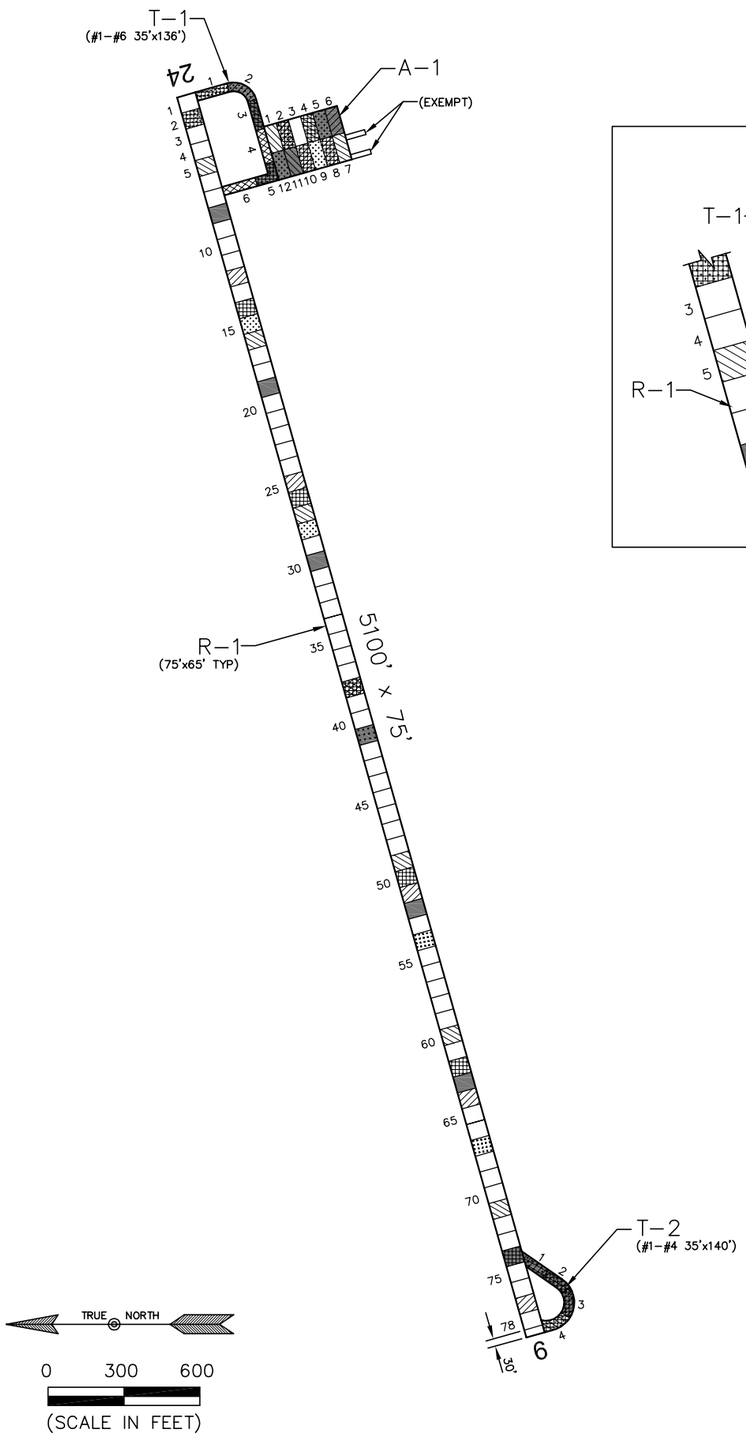

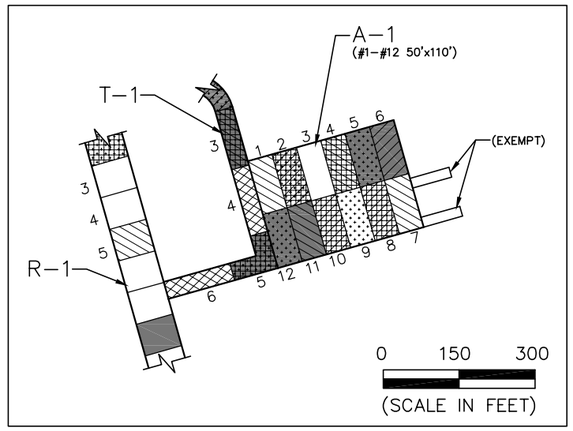

PAVEMENT STRENGTH SURVEY/PAVEMENT CONDITION SURVEY

PAVE. IDENT.	SOIL CLASS	SUB GRADE CLASS	SUBBASE COURSE	BASE COURSE	SURFACE COURSE	OVERLAY	PAVEMENT STRENGTH MAX. GROSS LOAD (LBS) SINGLE	DUAL	DUAL TAN.	REMARKS
RUNWAYS										
R–1			6" P–152	9" P–208	3" P–401	P–609	12,500			1 2
TAXIWAYS										
T–1			6" P–152	9" P–208	3" P–401	P–609	12,500			1 2
T–2			6" P–152	9" P–208	3" P–401	P–609	12,500			1 2
APRONS										
A–1			6" P–152	9" P–208	3" P–401	P–609	12,500			1 2

REMARKS:

1. AIP–06, SEPTEMBER 1990, ALL NEW CONSTRUCTION.
2. AIP–08, 2001, CRACK SEAL, FOG SEAL, AND REMARK ALL PAVEMENTS.

LEGEND

- 1994 SURVEY AREA
- 1997 SURVEY AREA
- 2000 SURVEY AREA
- 2003 SURVEY AREA
- 2006 SURVEY AREA

DATE OF PAVEMENT STRENGTH SURVEY:	
EVALUATED BY:	
DATE OF MOST RECENT PAVEMENT CONDITION SURVEY:	JULY 18, 2006
EVALUATED BY:	B. BURKLAND

MONTANA AVIATION SYSTEM PLAN
2006 UPDATE - PAVEMENT CONDITION INDEXES

COLSTRIP AIRPORT

PREPARED FOR: MONTANA AERONAUTICS DIVISION

COLSTRIP
MONTANA

DATE: NOV. 2006

PREPARED BY: ROBERT PECCIA & ASSOCIATES

COLSTRIP