# TERRY

7/17/06

**R-11**, detail - cracking at Runway paint

**R-11**, overview

**T-11**, overview with raveling

**A-11**, surface detail with pop-out

# TERRY

7/17/06

**T-11**, edge cracking

TERRY

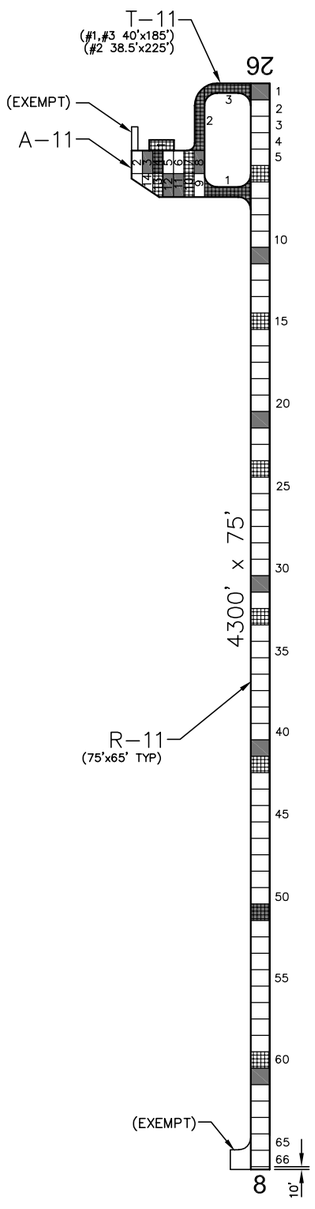


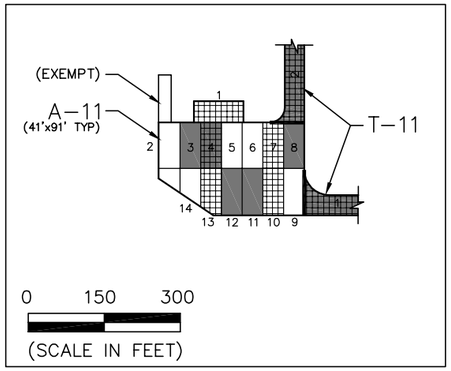


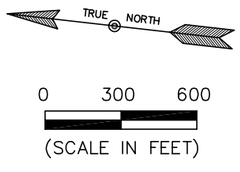


# PAVEMENT STRENGTH SURVEY/PAVEMENT CONDITION SURVEY

TERRY

| PAVE. IDENT. | SOIL CLASS | SUB GRADE CLASS | SUBBASE COURSE | BASE COURSE | SURFACE COURSE | OVERLAY | PAVEMENT STRENGTH MAX. GROSS LOAD (LBS) SINGLE | DUAL | DUAL TAN. | REMARKS |
|---|---|---|---|---|---|---|---|---|---|---|
| **RUNWAYS** | | | | | | | | | | |
| R–11 | E–1 | | | 11.5" P–207 | 2.5" P–401 | | 12,500 | | | 1 |
| **TAXIWAYS** | | | | | | | | | | |
| T–11 | E–1 | | | 11.5" P–207 | 2.5" P–401 | | 12,500 | | | 1 |
| **APRONS** | | | | | | | | | | |
| A–11 | E–1 | | | 11.5" P–207 | 2.5" P–401 | | 12,500 | | | 1 |

**REMARKS:**

ADAP, 1977, CONSTRUCTION

1 AIP–01, 2001, RECONSTRUCT RUNWAY, TAXIWAY, AND APRON.

**LEGEND**

- 1994 SURVEY AREA
- 1997 SURVEY AREA
- 2000 SURVEY AREA (NOT SURVEYED)
- 2003 SURVEY AREA
- 2006 SURVEY AREA

| | |
|---|---|
| DATE OF PAVEMENT STRENGTH SURVEY: | |
| EVALUATED BY: | |
| DATE OF MOST RECENT PAVEMENT CONDITION SURVEY: | JULY 17, 2006 |
| EVALUATED BY: | B. BURKLAND |

**MONTANA AVIATION SYSTEM PLAN**
**2006 UPDATE - PAVEMENT CONDITION INDEXES**

**TERRY AIRPORT**

PREPARED FOR: MONTANA AERONAUTICS DIVISION

TERRY
MONTANA

DATE: NOV. 2006

PREPARED BY: ROBERT PECCIA & ASSOCIATES