STATE	PROJECT NUMBER	SHEET NO.
MONTANA		

BRIDGE BUREAU

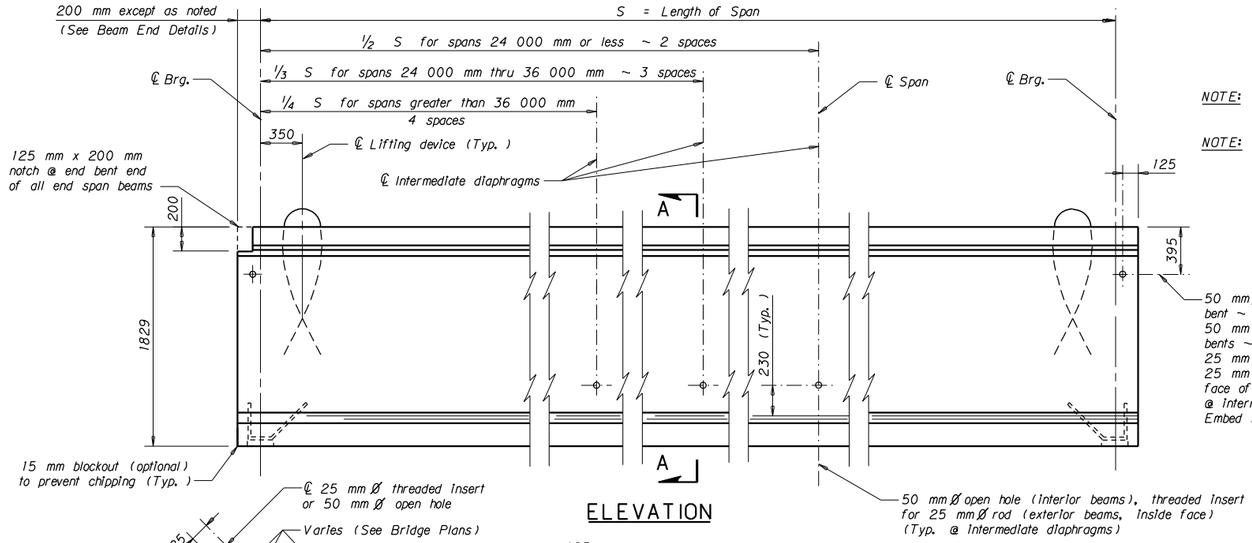

ELEVATION

NOTE: Beam is symmetrical about ℄ of span except as noted.

NOTE: For the number of B1~#16 stirrups required per beam, use the following equation:
N = ((S - 5500)/600 + 17) x 2

If the result of the equation is an odd number, round to the next largest even whole number.

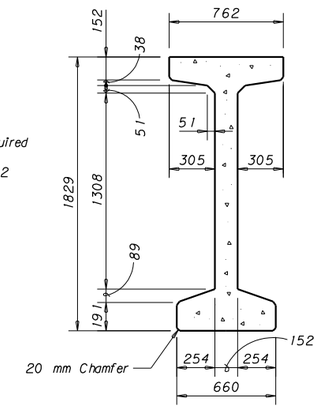

SECTION A-A

NOTES

SPECIFICATIONS: For design specifications, see General Layout. Design and fabricate the beam to support the dead load and live load stresses and provide a minimum ultimate moment capacity shown on the Erection Plan. Show stresses in the beam under each loading condition that is anticipated in the manufacture, handling and service life of the beam.

PRESTRESSING STEEL: Use 12.7 mm diameter, 7 wire strand prestressing steel.

HARDWARE: Threaded inserts, hold down devices, lifting devices and any other hardware which is to be incorporated in the beam will be approved by the Engineer before fabrication is begun.

DIAPHRAGMS: See Erection Plan for location of diaphragms when structure is skewed.

BEAM LENGTH: Increase the overall length of the beam 0.60 mm per meter of length to allow for elastic shortening, shrinkage and creep.

SHOES: If expansion shoes are required, see details on Bridge Plans. For type of shoes required see General Layout.

REINFORCING STEEL: See General Layout.

DIMENSIONS: All dimensions are in millimeters.

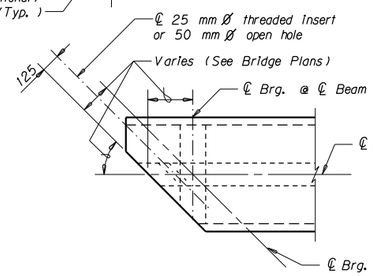

SKEWED BRIDGE

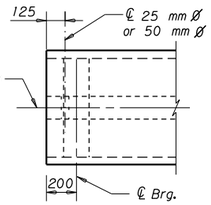

SQUARE BRIDGE

BEAM END DETAILS

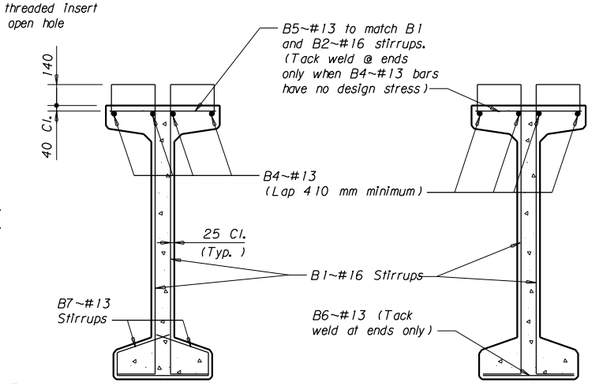

SECTION B-B

SECTION C-C

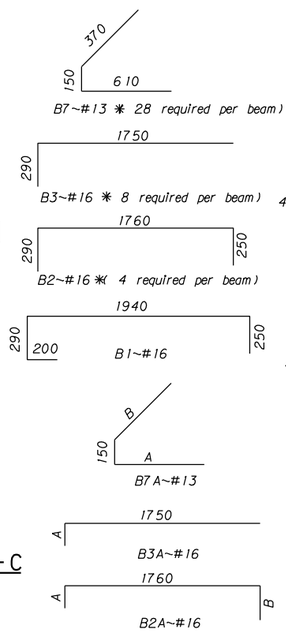

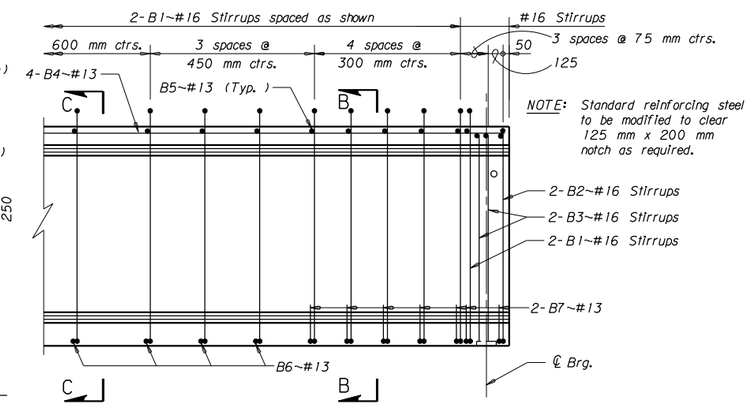

NOTE: Standard reinforcing steel to be modified to clear 125 mm x 200 mm notch as required.

ELEVATION ~ SQUARE BEAM END

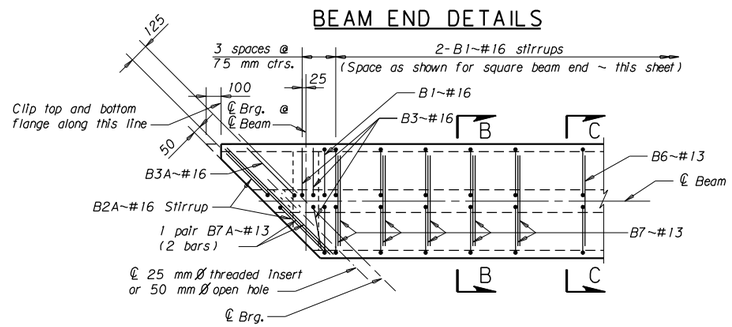

PLAN VIEW ~ SKEWED BEAM END

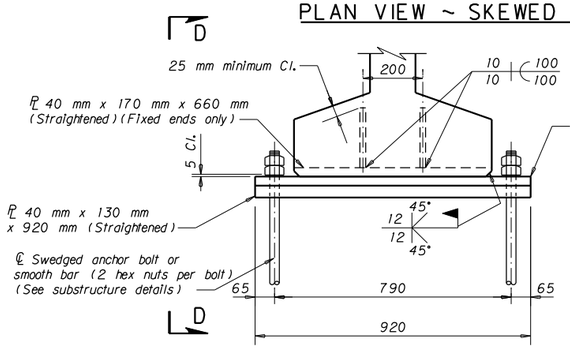

END VIEW

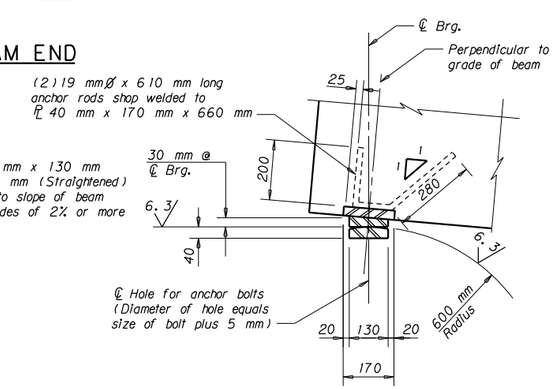

FIXED SHOE DETAILS

VIEW D-D

* NOTE: Number shown is for square beam ends. Number required for skewed beam ends varies.

NOTE: The number of B2A~#16 stirrups required per beam varies due to varying skew.

NOTE: Length of A and B varies due to varying skew.

NOTE: Include all costs to furnish and install anchor bolts, nuts, shoes and embedded plates in the unit price bid for Prestressed Beams ~ Type M-72.

NOTE: See substructure details for length and size of anchor bolts.

NOTE: Use structural steel meeting the requirements of AASHTO M 270M Grade 250 for embedded plates and shoes. Use structural steel meeting the requirements of AASHTO M 314M Grade 248 for anchor bolts.

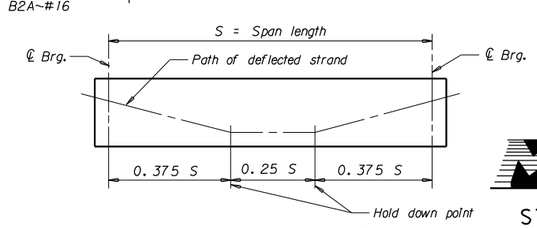

TYPICAL DEFLECTED STRAND
FOR PRE-TENSIONING SYSTEM

MONTANA DEPARTMENT OF TRANSPORTATION

STANDARD PRESTRESSED
CONCRETE BEAM
TYPE M-72

No Scale

CONVERTED	9-24-96	L. M. S.
DRAWN	9-24-96	L. M. S.
CHECKED	12-16-96	B. G. N.
APPROVED	2-18-97	J. P. K.
REVISED	2-20-97	L. M. S.
REVISED	3-5-01	L. M. S.

FILENAME: mm72301.std

DRAWING NO. MM-72