STATE	PROJECT NUMBER	SHEET NO.
MONTANA		

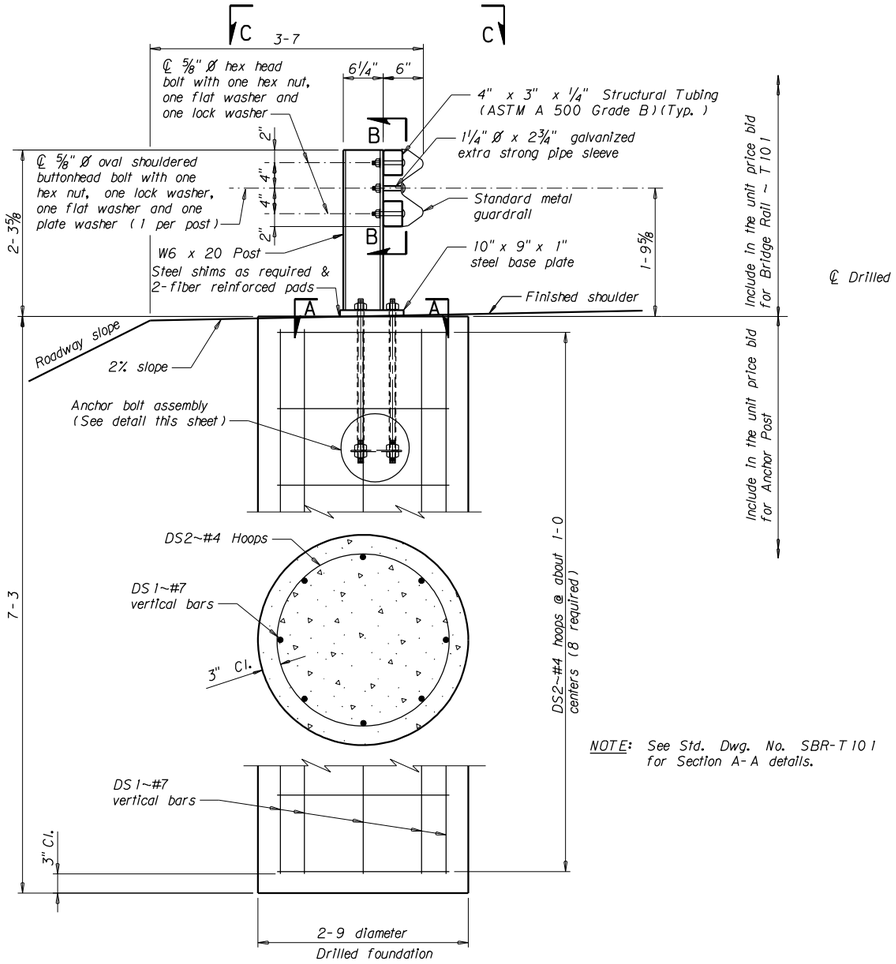

ELEVATION

Scale: 1" = 1'-0"

NOTE: See Std. Dwg. No. SBR-T101 for Section A-A details.

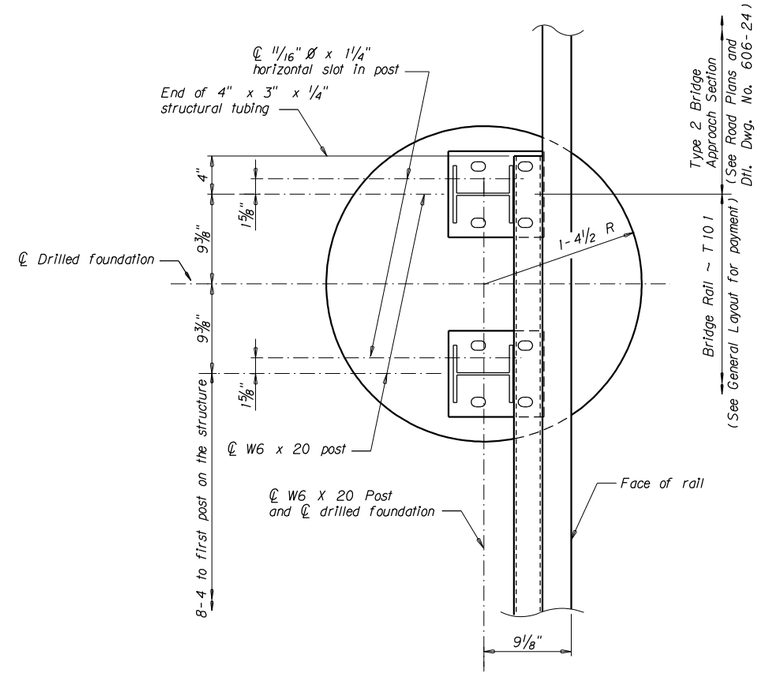

VIEW C-C

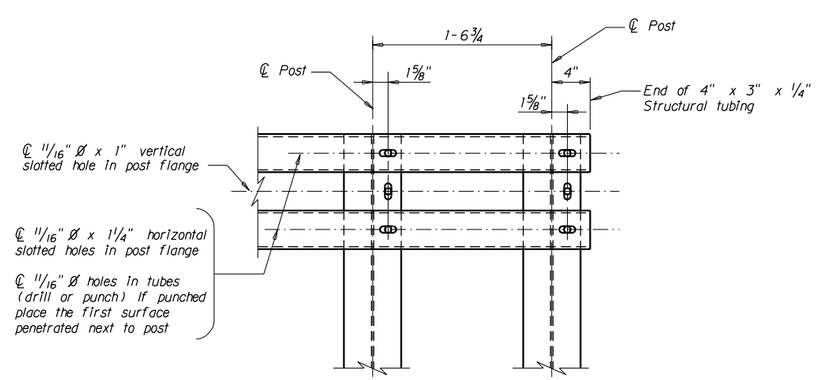

SECTION B-B

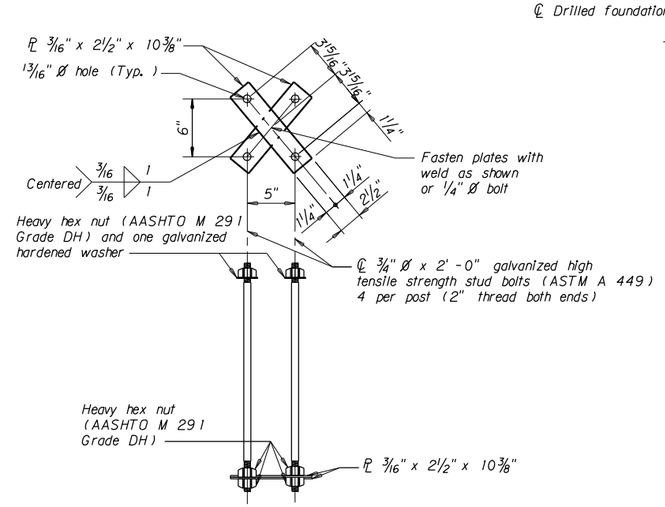

ANCHOR BOLT ASSEMBLY DETAIL

BILL OF REINFORCING STEEL

FOR ONE ANCHOR POST ONLY
All dimensions are out to out

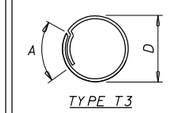

TYPE T3

Mark	Size	No.	Type	Length	A	B	C	D	E	G
DS1	#7	8	STR	6'-10"						
DS2	#4	8	T3	8'-9"	1'-8"			2'-3"		

NOTES

PAYMENT: Anchor Post is paid for at the unit price bid which is full compensation for all resources necessary to complete the item.

ERECTION: Set rail posts perpendicular to roadway grade and set rail parallel to the roadway grade. Adjust rail to proper rail height using vertical slots in the rail posts or rail post shims.

Use Class DD-Bridge Concrete. Estimated volume per foundation = 1.6 cubic yards

Use new deformed type reinforcing steel meeting the requirements of AASHTO M 31 Grade 60. Estimated rebar weight per foundation = 159 lbs.

Construct the portion of the approach fills, where the drilled foundation is constructed, of select material meeting the specified requirements for embankments.

See Std. Dwg. No. SBR-T101 for additional notes and details.

See General Layout for location of the drilled foundations.

Finish the top of the foundation under each rail post to a smooth and uniform surface to assure a proper alignment of the post and a tight fit between the fiber reinforced pad and concrete. Bush hammering is acceptable only to remove high spots.

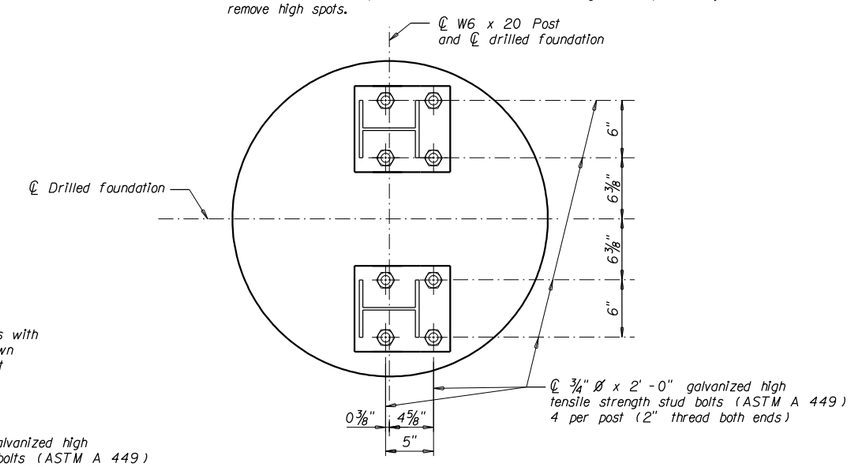

T101 POST ANCHOR BOLT LOCATION

DRAWN	3-22-92	H. A. W.
CHECKED	2-10-96	D. D. R.
APPROVED	4-24-98	J. P. K.
REVISED	3-3-05	L. M. S.
REVISED	2-1-11	D. F. J.
REVISED		
REVISED		
REVISED		

MDT Montana Department of Transportation

STANDARD DRILLED FOUNDATION ANCHOR POST

Scale: 1 1/2" = 1'-0" except as noted

STD REF DS211.STD

DRAWING NO. DS