STATE	PROJECT NUMBER	SHEET NO.
MONTANA		

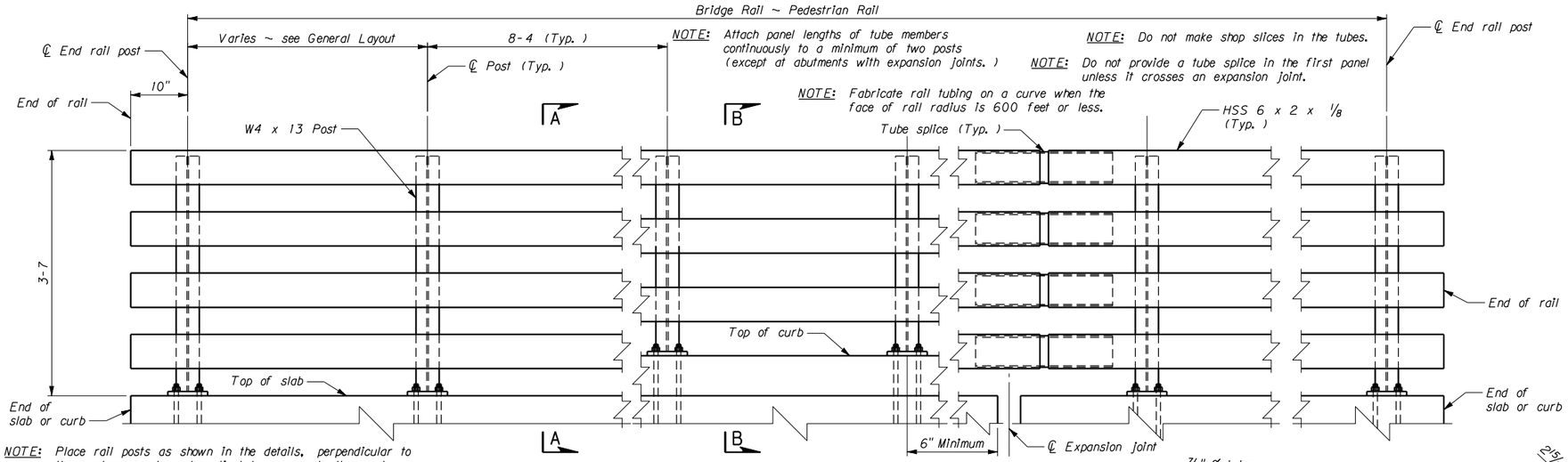

NOTE: Attach panel lengths of tube members continuously to a minimum of two posts (except at abutments with expansion joints.)

NOTE: Do not make shop slices in the tubes.

NOTE: Do not provide a tube splice in the first panel unless it crosses an expansion joint.

NOTE: Fabricate rail tubing on a curve when the face of rail radius is 600 feet or less.

NOTE: Place rail posts as shown in the details, perpendicular to the roadway grade and vertical transverse to the grade.

NOTE: Place expansion splice in rail to position it between the same rail posts as the expansion joint.

INSIDE ELEVATION OF RAIL

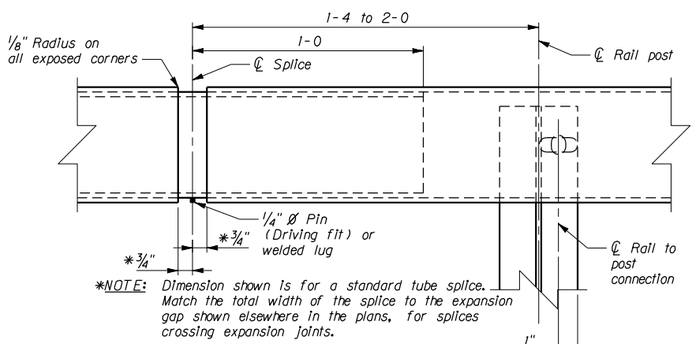

*NOTE: Dimension shown is for a standard tube splice. Match the total width of the splice to the expansion gap shown elsewhere in the plans, for splices crossing expansion joints.

TUBE SPLICE DETAIL

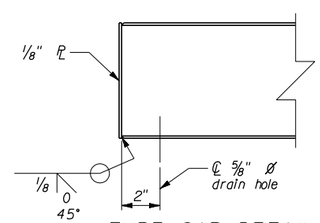

TUBE CAP DETAIL

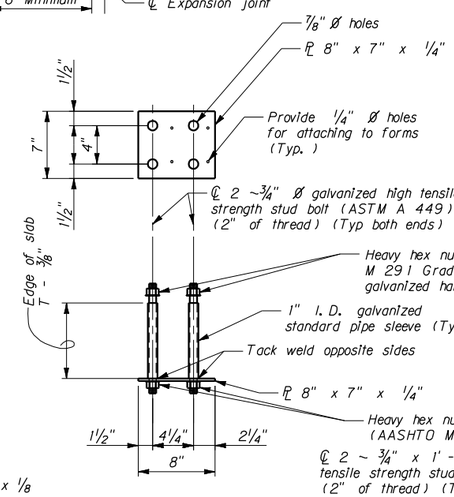

STANDARD SLAB

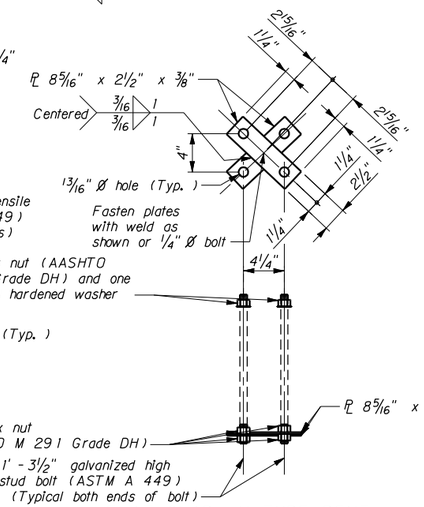

FLAT SLAB, U-TYPE BENT AND CURB

ANCHOR BOLT ASSEMBLY DETAIL

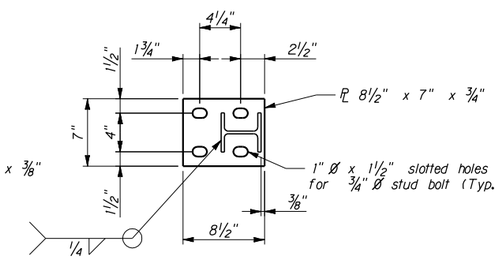

RAIL POST BASE PLATE

NOTES

GALVANIZING: Galvanize all bolts, nuts, washers and pipe sleeves in accordance with AASHTO M 232.

PAYMENT: Bridge Rail ~ Pedestrian is paid for by the linear foot, which is full compensation for all resources necessary to complete the item. The General Layout shows the number of linear feet of Bridge Rail ~ Pedestrian for payment. Use posts and plates conforming to AASHTO M 270 Grade 36 and ASTM A500 Grade B for the tubing.

ERECTION: Set the rail parallel to the roadway grade. Adjust the rail to the proper height using the vertical slots in the rail posts or shims under the posts.

PAINTING: Paint all posts, structural tubing and plates (except as noted) in accordance with the Standard Specifications. Galvanizing the posts, structural tubing and plates in accordance with AASHTO M 111 is allowed.

EXCEPTIONS: Use details shown on this drawing only as they apply to the project. Anchorage details may vary. Refer to other drawings for variations in these details.

FABRICATION: Consider this rail system an ancillary item for the purposes of fabrication. Meet the requirements of subsection 1.3.6 of AASHTO/AWS D1.5.

SHIMS: Place shims as necessary to adjust the rail to grade. Place the shims between fiber reinforced pads.

FIBER REINFORCED PADS: Use fiber reinforced pads meeting the requirements of subsection 711.16 of the Standard Specifications. Size and position the pads so that not less than 1/2" of the pad protrudes on all sides of the base plate. Punch slotted holes in the pads to match the base plate.

FINISHING: Finish the top of the slab or curb under each rail post to a smooth and uniform surface to assure a proper alignment of the post and a tight fit between the fiber reinforced pad and concrete. Bush hammering is acceptable only to remove high spots.

RAIL WEIGHT: For informational purposes only, the rail weight is approximately 33.5 lb/ft for a four-tube rail and 26.0 lb/ft for a three-tube rail.

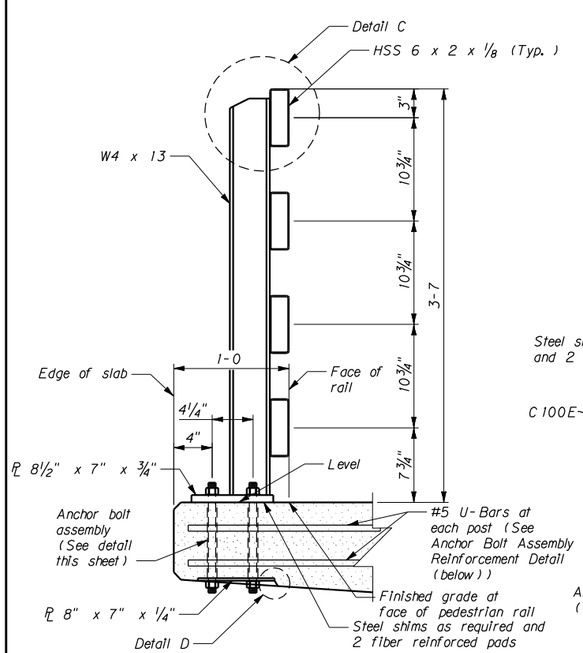

SECTION A-A

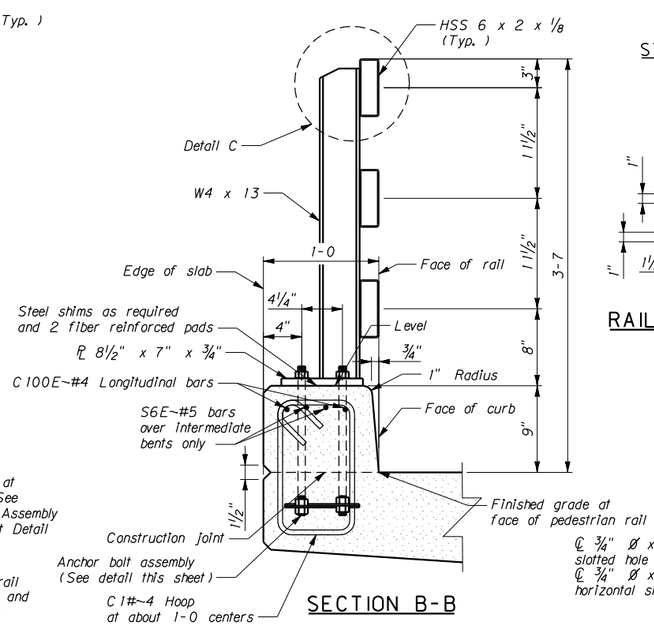

SECTION B-B

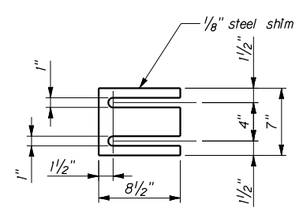

RAIL POST SHIM DETAIL

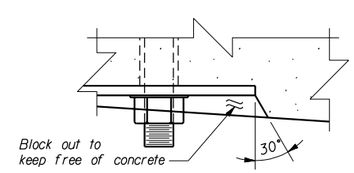

DETAIL D

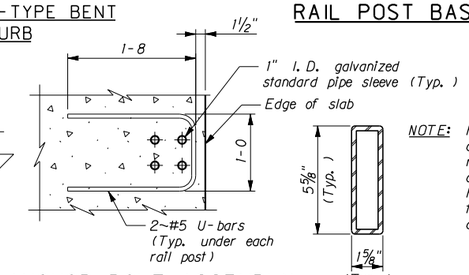

ANCHOR BOLT ASSEMBLY REINFORCEMENT

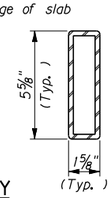

NOTE: Fabricate sleeves using channels, angles, plates, or bent plates meeting the dimensions shown. Weld and grind smooth as required. Fabricate sleeves using no more than four welds. Fabricate sleeves with a minimum wall thickness of 1/4".

SPLICE FABRICATION OPTIONS

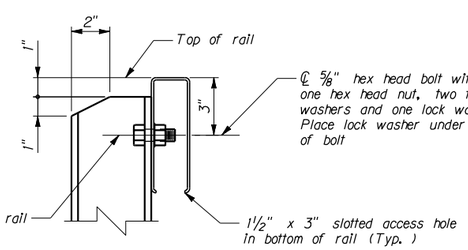

DETAIL C

DRAWN	10-1-09	T. J. B.
CHECKED	10-29-09	N. N. M.
APPROVED	8-26-10	D. F. J.
REVISED		
REVISED		
REVISED		
REVISED		
REVISED		

MDT Montana Department of Transportation

STANDARD BRIDGE RAIL
TYPE PEDESTRIAN

No Scale

STD REF PED0810.STD

DRAWING NO. SBR-PED