STATE	PROJECT NUMBER	SHEET NO.
MONTANA		

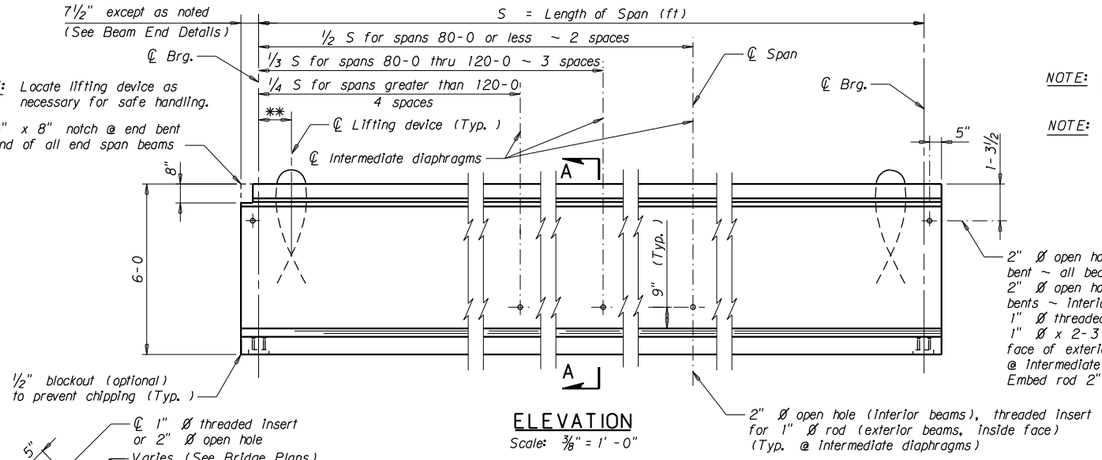

ELEVATION

Scale: ⅜" = 1'-0"

NOTE: Beam is symmetrical about ℄ of span except as noted.

NOTE: Use the following equation to determine the number of B1~#5 stirrups required per beam:
N = ((S - 18)/2 + 37) x 2

If the result of the equation is an odd number, round to the next largest even whole number.

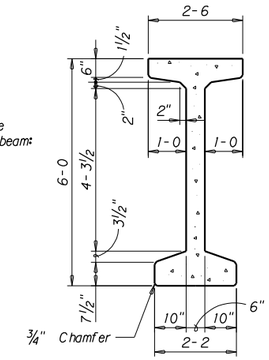

SECTION A-A

NOTES

SPECIFICATIONS: For design specifications, see General Layout. Design and fabricate the beam to support the dead load and live load stresses and provide a minimum ultimate moment capacity shown on the Erection Plan. Show stresses in the beam under each loading condition that is anticipated in the manufacture, handling and service life of the beam.

PRESTRESSING STEEL: Use 0.500" diameter or 0.600" diameter, 7 wire strand prestressing steel.

HARDWARE: Threaded inserts, hold down devices, lifting devices and any other hardware which is to be incorporated in the beam will be approved by the Engineer before fabrication is begun.

DIAPHRAGMS: See Erection Plan for location of diaphragms when structure is skewed.

BEAM LENGTH: Increase the overall length of the beam 0.0075 inches per foot of length to allow for elastic shortening, shrinkage and creep.

SHOES: Paint shoes according to Standard Specifications. See details on Bridge Plans if expansion shoes are required. See General Layout for type of shoes required.

REINFORCING STEEL: See General Layout.

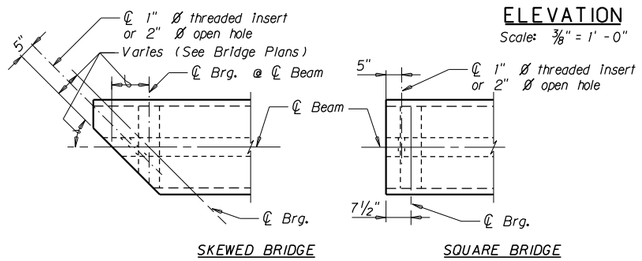

SKEWED BRIDGE

SQUARE BRIDGE

BEAM END DETAILS

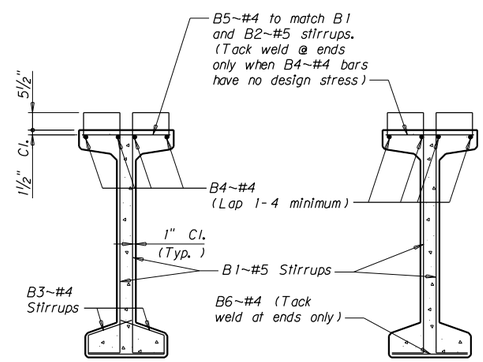

SECTION B-B

SECTION C-C

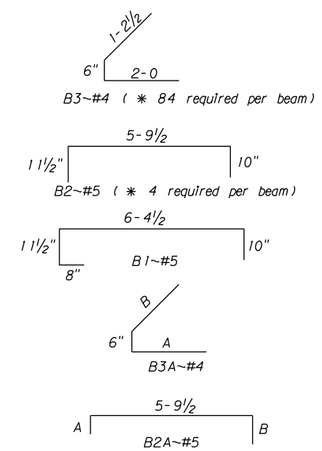

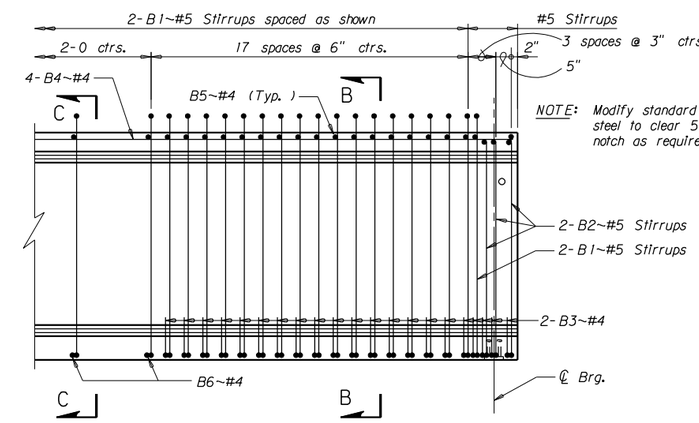

NOTE: Modify standard reinforcing steel to clear 5" x 8" notch as required.

ELEVATION ~ SQUARE BEAM END

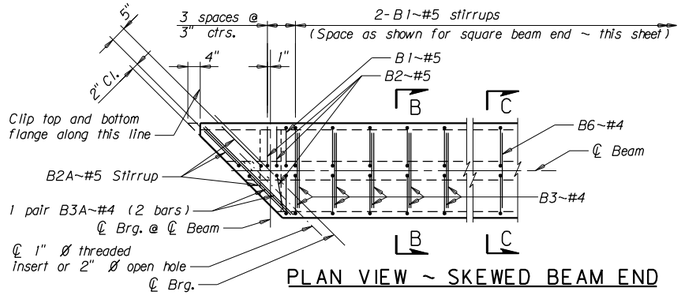

PLAN VIEW ~ SKEWED BEAM END

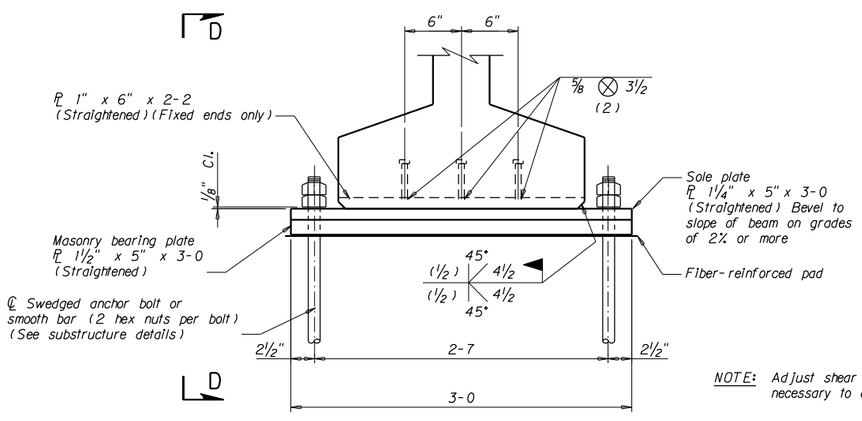

END VIEW

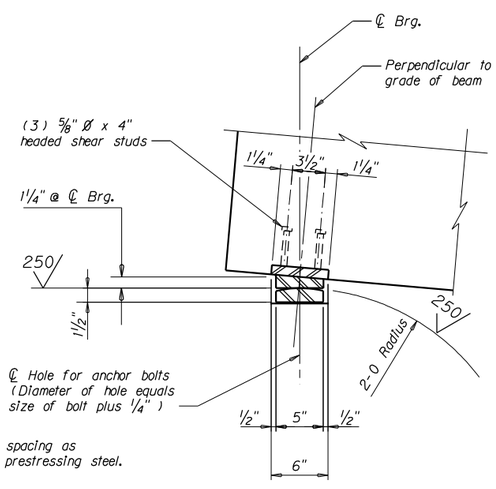

NOTE: Adjust shear stud spacing as necessary to avoid prestressing steel.

FIXED SHOE DETAILS

Scale: 1½" = 1'-0"

VIEW D-D

*NOTE: Number shown is for square beam ends. Number required for skewed beam ends varies.

NOTE: The number of B2A~#5 stirrups required per beam varies due to varying skew.

NOTE: Length of A and B varies due to varying skew.

NOTE: Include all costs to furnish and install anchor bolts, nuts, shoes, fiber-reinforced pads and embedded plates in the unit price bid for Prestressed Beams ~ Type M-72.

NOTE: See substructure details for length and size of anchor bolts.

NOTE: Use structural steel meeting the requirements of AASHTO M 270 Grade 36 for embedded plates and shoes. Use structural steel meeting the requirements of AASHTO M 314 Grade 36 for anchor bolts. Galvanize the anchor bolts meeting the requirements of AASHTO M 232. Use headed shear studs meeting the requirements of AASHTO M 169 Grades 1010 through 1020.

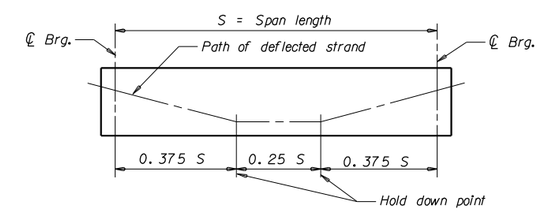

TYPICAL DEFLECTED STRAND FOR PRE-TENSIONING SYSTEM

No Scale

serving you with pride

Montana Department of Transportation

STANDARD PRESTRESSED CONCRETE BEAM

TYPE M-72

DRAWN	9-21-07	L.M.S.
CHECKED	12-21-07	J.S.O.
APPROVED	2-1-08	D.F.J.
REVISED		
REVISED		
REVISED		

Scale: ½" = 1'-0" except as noted

DRAWING NO. M-72

serving you with pride — MONTANA DEPARTMENT OF TRANSPORTATION

C:\dgn\EXXXBRSTDM72.DGN
7/28/2008
2:02:18 PM u1426