STATE	PROJECT NUMBER	SHEET NO.
MONTANA		

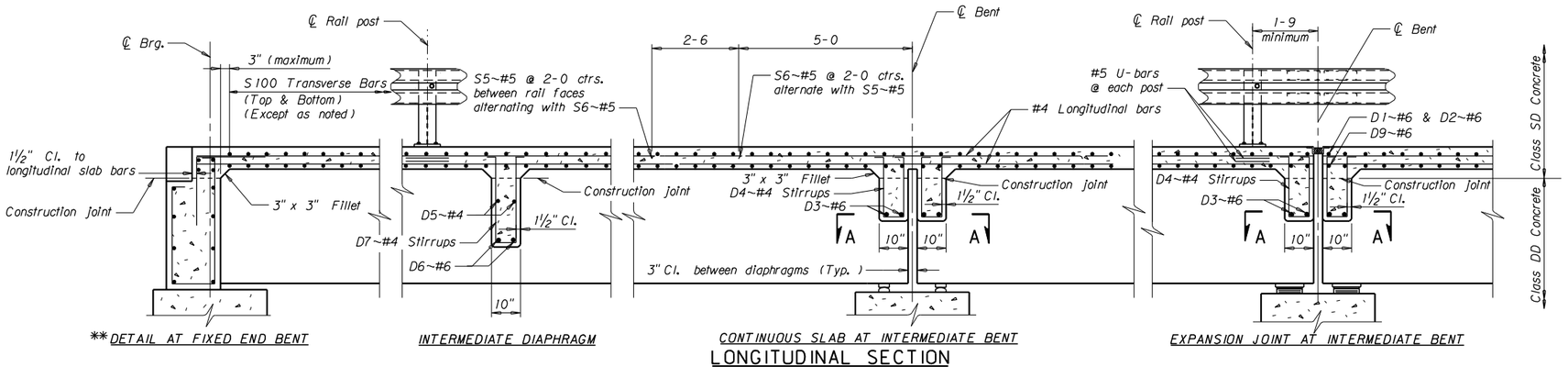

**DETAIL AT FIXED END BENT

INTERMEDIATE DIAPHRAGM

CONTINUOUS SLAB AT INTERMEDIATE BENT

EXPANSION JOINT AT INTERMEDIATE BENT

LONGITUDINAL SECTION

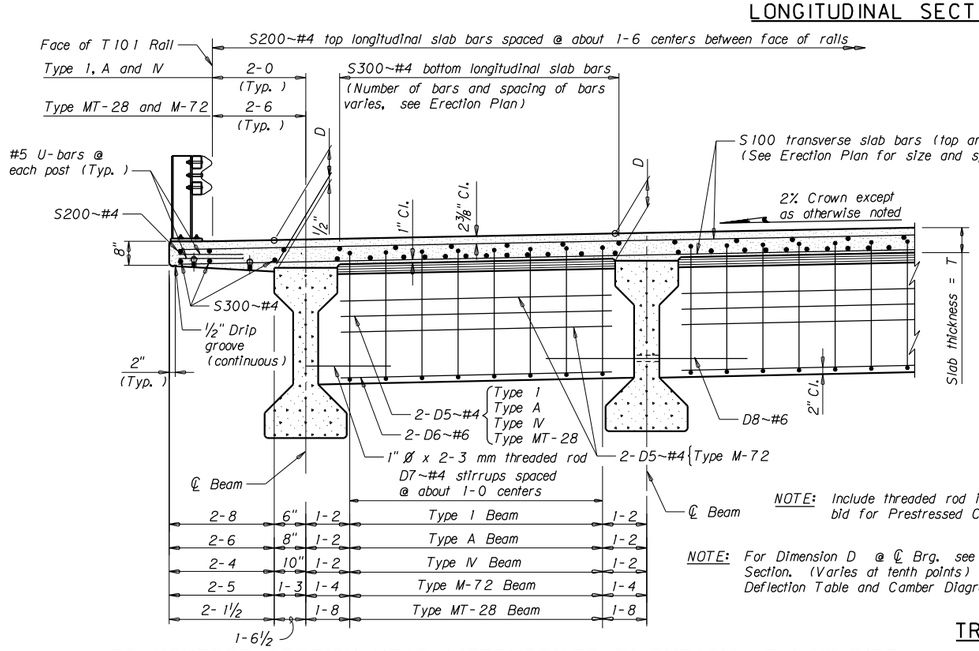

NOTE: Include threaded rod in the unit price bid for Prestressed Concrete Beams.

NOTE: For Dimension D @ ℄ Brg. see slab Transverse Section. (Varies at tenth points) See Dead Load Deflection Table and Camber Diagram.

TRANSVERSE SECTION NEAR INTERMEDIATE DIAPHRAGM AT LOW SIDE

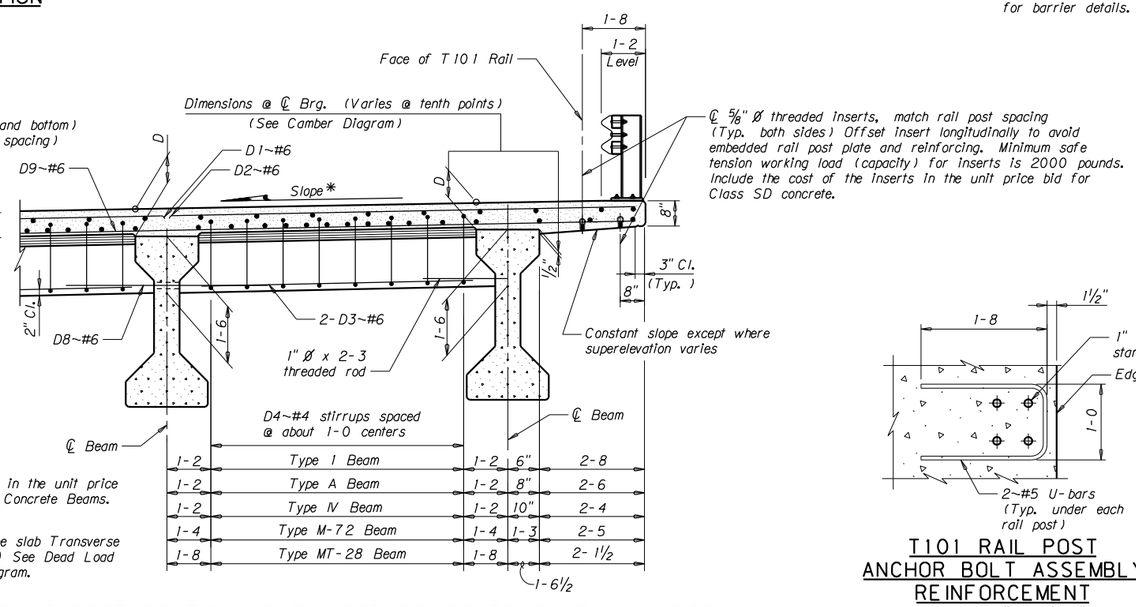

TRANSVERSE SECTION NEAR INTERMEDIATE BENT AT HIGH SIDE

*NOTE: Detail shown is for superelevations other than normal crown.

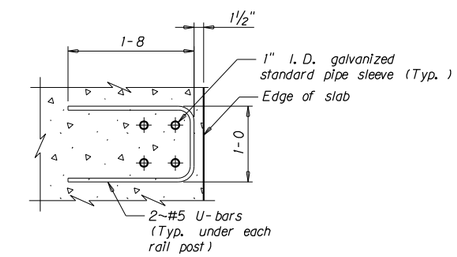

T101 RAIL POST ANCHOR BOLT ASSEMBLY REINFORCEMENT

Scale ~ 1" = 1'-0"

NOTES

Use details shown on this sheet only as they apply to the project. See the General Layout or Erection plan for beam spacing, slab thickness, size and spacing of S100 bars, number and spacing of S200 and S300~#4 bars, deck joint arrangement, barrier length, bill of reinforcing steel and roadway width.

When adjoining spans have a different number of longitudinal slab bars, make the longitudinal bars of the shorter span continuous over the bent and extend them 3-0 into the longer span.

If the bridge is skewed, place the transverse slab reinforcing steel as shown on the Erection Plan.

Do not place concrete barrier for at least 72 hours after concrete in slab has taken initial set.

See Standard Bridge Rail Type Barrier drawing for barrier details.

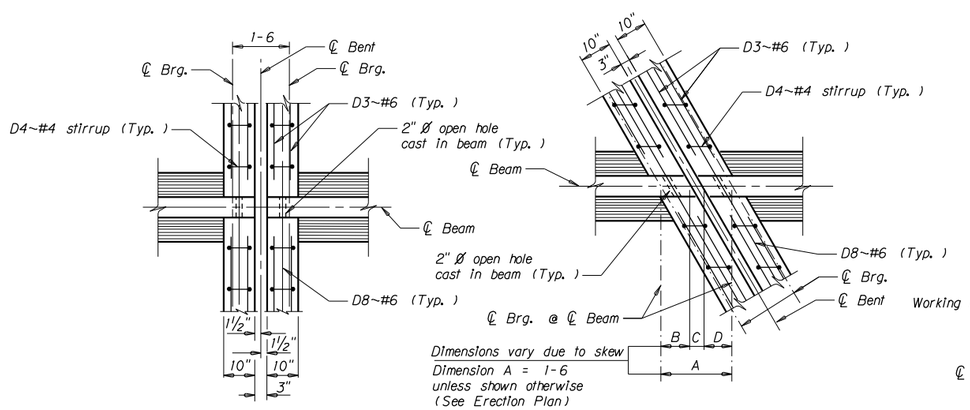

AT SQUARE BRIDGE

SECTION A-A

AT SKEWED BRIDGE

NOTE: See Erection plan for theoretical D.L. Deflection Table for Prestressed Concrete Beams.

NOTE: Camber is noted as the distance from the working line to the top of beam and may vary from theoretically calculated D.L. deflection.

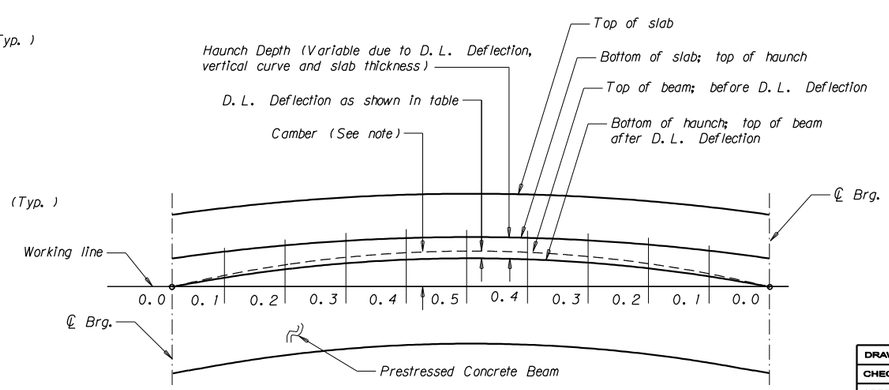

CAMBER DIAGRAM

Montana Department of Transportation

serving you with pride

STANDARD SLAB, RAIL AND DIAPHRAGM DETAILS

No Scale

DRAWN	9-27-07	L.M.S.
CHECKED	10-9-07	D.J.R.
APPROVED	2-12-08	D.F.J.
	3-28-08	T.J.B.
REVISED		
REVISED		

DRAWING NO. SL-6

MONTANA DEPARTMENT OF TRANSPORTATION

serving you with pride

C:\dgn\EXXXBRSTDSL6.DGN
7/28/2008
2:03:32 PM u1426