STATE	PROJECT NUMBER	SHEET NO.
MONTANA		

BRIDGE BUREAU

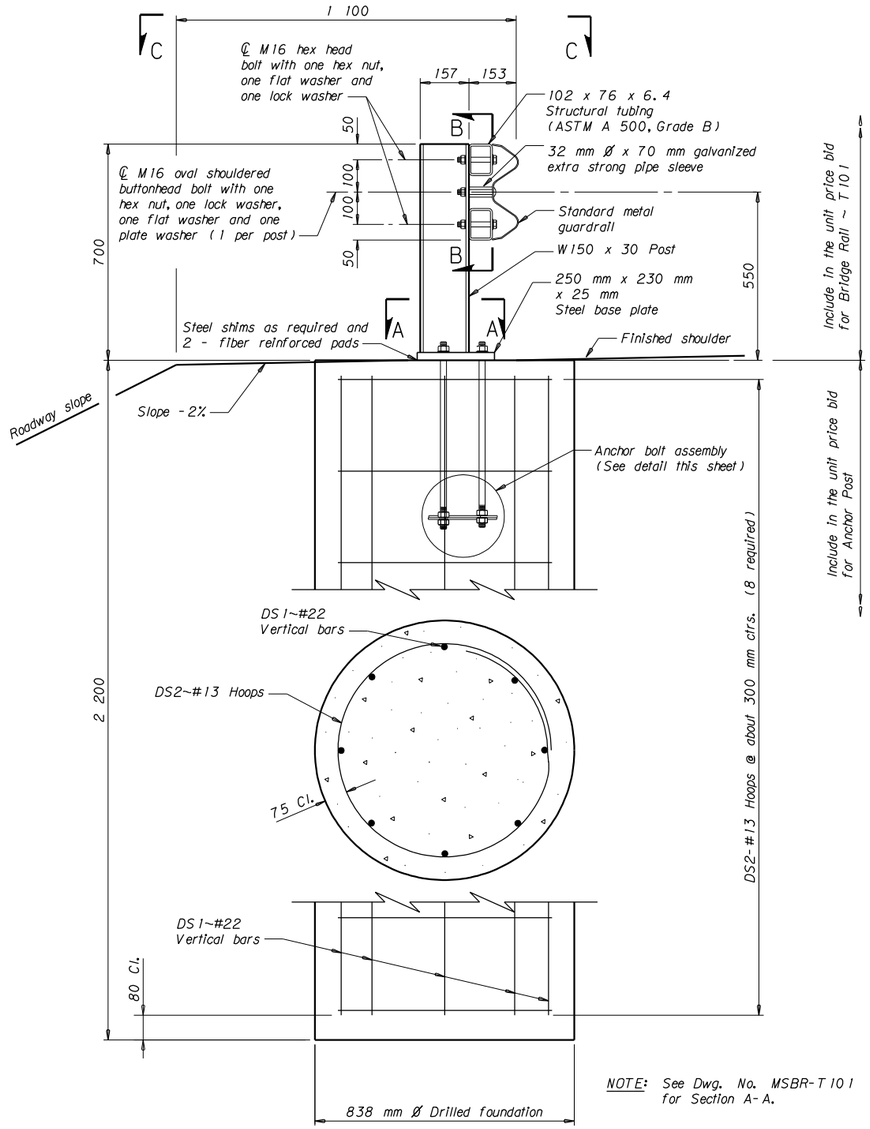

NOTE: See Dwg. No. MSBR-T101 for Section A-A.

ELEVATION

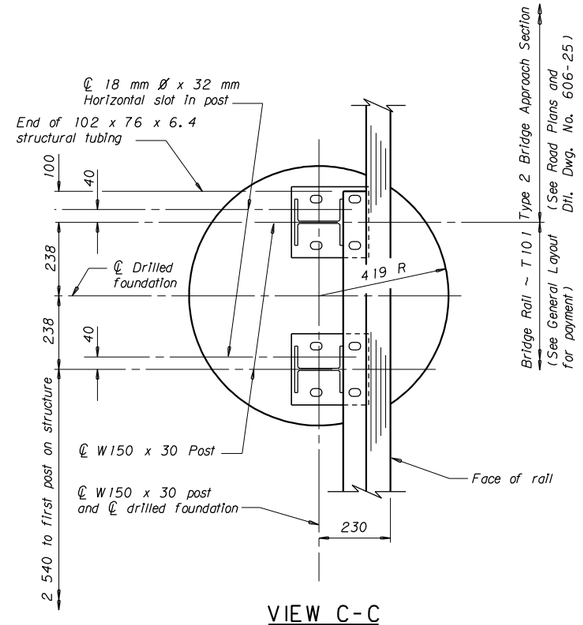

VIEW C-C

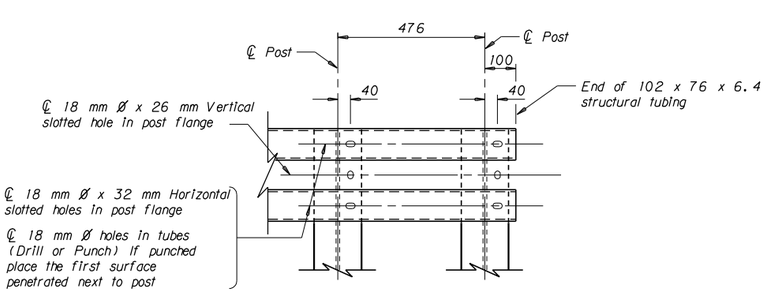

SECTION B-B

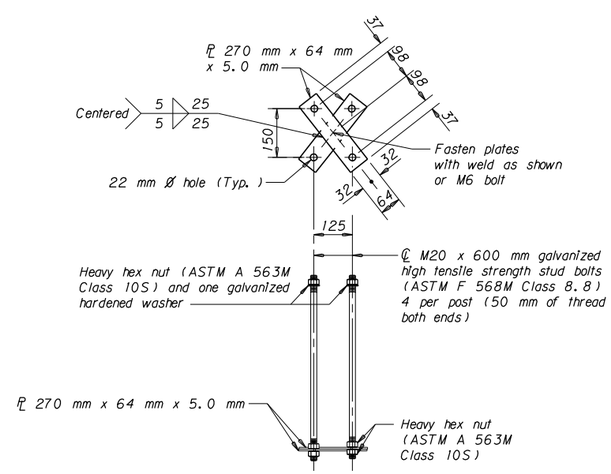

ANCHOR BOLT ASSEMBLY DETAIL

BILL OF REINFORCING STEEL (One Anchor Post)

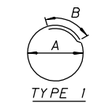

STRAIGHT BARS				BENT BARS (All dimensions are out to out)						
Mark	Size	No.	Length	Mark	Size	No.	Type	Length	A	B
DS1	#22	8	2 070	DS2	#13	8	1	2 680	690	510

NOTES

PAYMENT: Anchor Post is paid for at the unit price bid which is full compensation for all resources necessary to complete the item.

ERECTION: Set rail posts perpendicular to roadway grade and set rail parallel to the roadway grade. Adjust rail to proper rail height using vertical slots in the rail posts or rail post shims.

Use Class DD-Bridge Concrete. Estimated volume per foundation = 1.2 cubic meters

Use new deformed type reinforcing steel meeting the requirements of AASHTO M 31M Grade 60 (420). Estimated rebar mass = 72 kg

Construct the portion of the approach fills, where the drilled foundation is constructed, of select material meeting the specified requirements for embankments.

See Std. Dwg. No. MSBR-T101 for additional notes and details.

See General Layout for location of the drilled foundations.

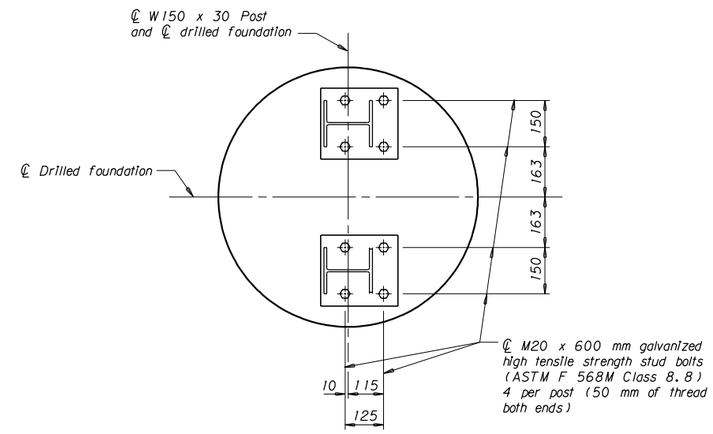

T101 POST ANCHOR BOLT LOCATION

MONTANA DEPARTMENT OF TRANSPORTATION

STANDARD

DRILLED FOUNDATION ANCHOR POST

			CONVERTED	3-27-96	L.R.T.
			DRAWN	3-27-96	L.R.T.
			CHECKED	3-29-96	D.J.R.
			APPROVED	4-24-98	J.P.K.
REVISED	2-1-11	D.F.J.	REVISED	3-5-01	L.M.S.
REVISED	3-22-04	L.M.S.	REVISED	3-4-03	L.M.S.

Scale ~ 1: 10

STD REF: MDS211.STD

DRAWING NO. MDS