STATE	PROJECT NUMBER	SHEET NO.
MONTANA		

BRIDGE BUREAU

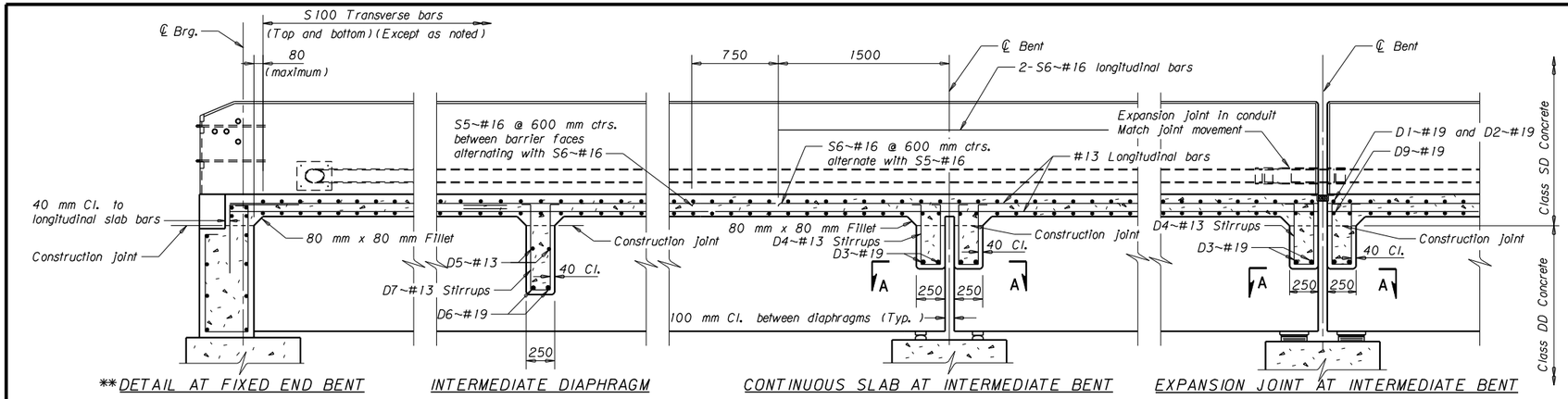

**DETAIL AT FIXED END BENT

INTERMEDIATE DIAPHRAGM

CONTINUOUS SLAB AT INTERMEDIATE BENT

EXPANSION JOINT AT INTERMEDIATE BENT

LONGITUDINAL SECTION

** NOTE: The detail for end bents with expansion joints is similar to the detail for an expansion joint at an intermediate bent.

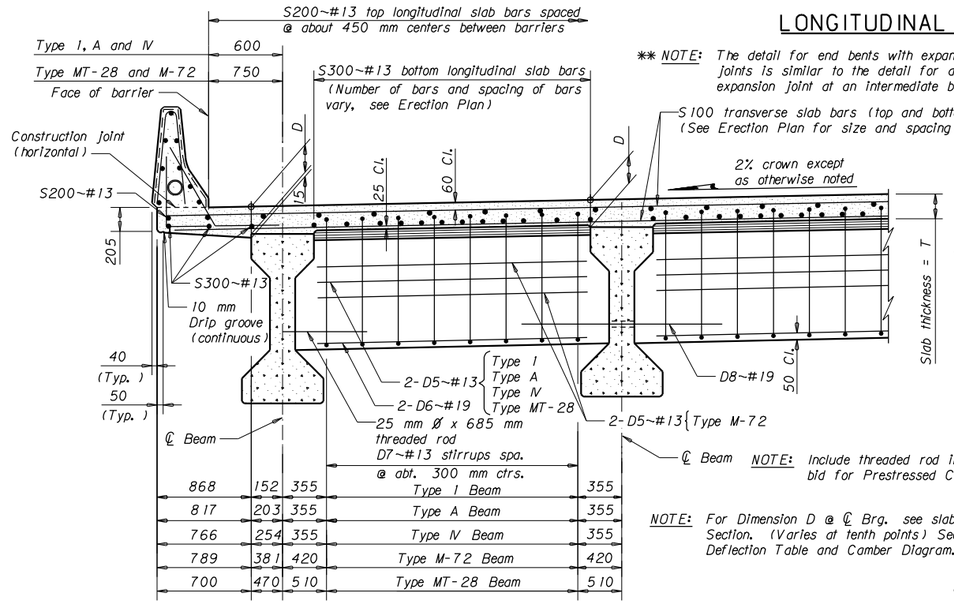

NOTE: Include threaded rod in the unit price bid for Prestressed Concrete Beams.

NOTE: For Dimension D @ ℄ Brg. see slab Transverse Section. (Varies at tenth points) See Dead Load Deflection Table and Camber Diagram.

TRANSVERSE SECTION NEAR INTERMEDIATE DIAPHRAGM AT LOW SIDE

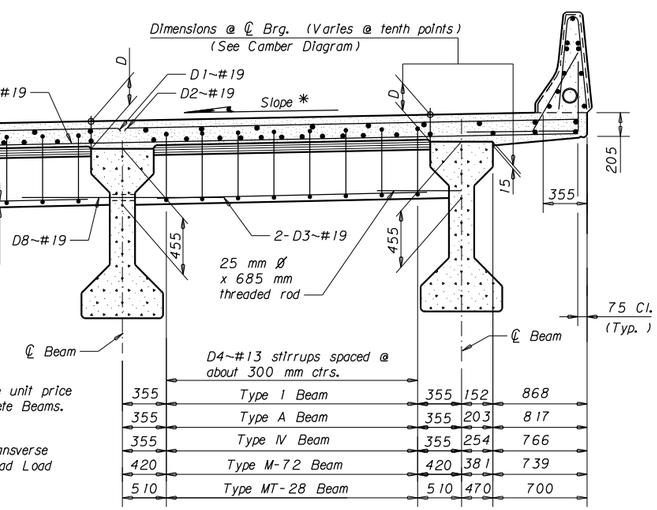

TRANSVERSE SECTION NEAR INTERMEDIATE BENT AT HIGH SIDE

*NOTE: Detail shown is for superelevations other than normal crown.

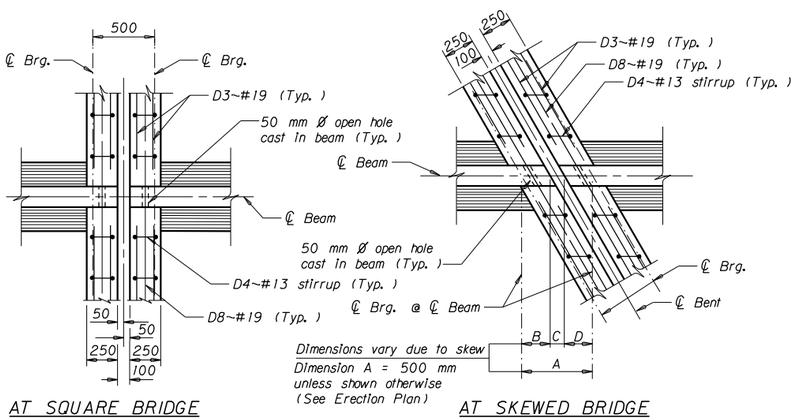

AT SQUARE BRIDGE

AT SKEWED BRIDGE

SECTION A-A

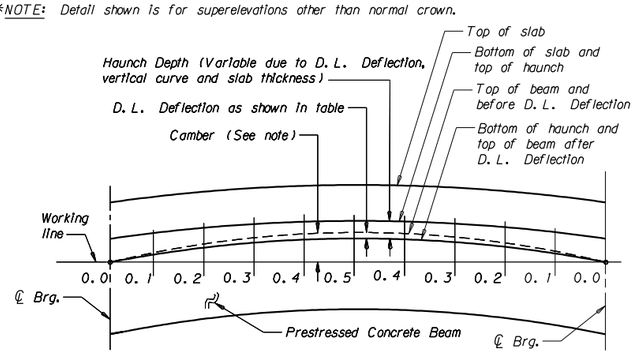

NOTE: See Erection Plan for theoretical D.L. Deflection Table for Prestressed Concrete Beams.

NOTE: Camber is noted as the distance from the working line to the top of beam and may vary from the theoretically calculated D.L. deflection.

CAMBER DIAGRAM

NOTES

Use details shown on this sheet only as they apply to the project. The General Layout or the Erection Plan show beam spacing, slab thickness, size and spacing of S100 bars, number and spacing of S200 and S300~#13 bars, deck joint arrangement, barrier length, bill of reinforcing steel and roadway width.

When adjoining spans have a different number of longitudinal slab bars, continue the longitudinal bars of the shorter span over the bent and extend them 900 mm into the longer span.

If the bridge is skewed, place the transverse slab reinforcing steel as shown on the Erection Plan.

Do not place concrete barrier for at least 72 hours after the slab concrete has taken initial set.

All dimensions are in millimeters.

See the Standard Bridge Rail Type Barrier drawing for barrier details.

MONTANA DEPARTMENT OF TRANSPORTATION

STANDARD SLAB, BARRIER AND DIAPHRAGM DETAILS

No Scale

DRAWN	7-29-08	T.J.B.
CHECKED	7-29-08	N.N.M.
APPROVED	7-31-08	D.F.J.
REVISED		
REVISED		
REVISED		
REVISED		
REVISED		

STD REF: MSL5708.STD

DRAWING NO. MSL-5