STATE	PROJECT NUMBER	SHEET NO.
MONTANA		

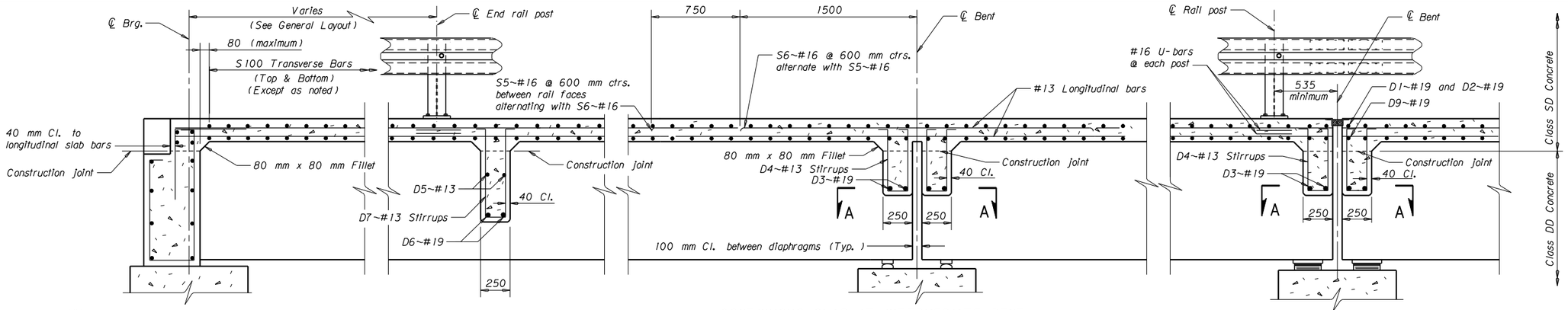

** DETAIL AT FIXED END BENT

INTERMEDIATE DIAPHRAGM

CONTINUOUS SLAB AT INTERMEDIATE BENT

EXPANSION JOINT AT INTERMEDIATE BENT

LONGITUDINAL SECTION

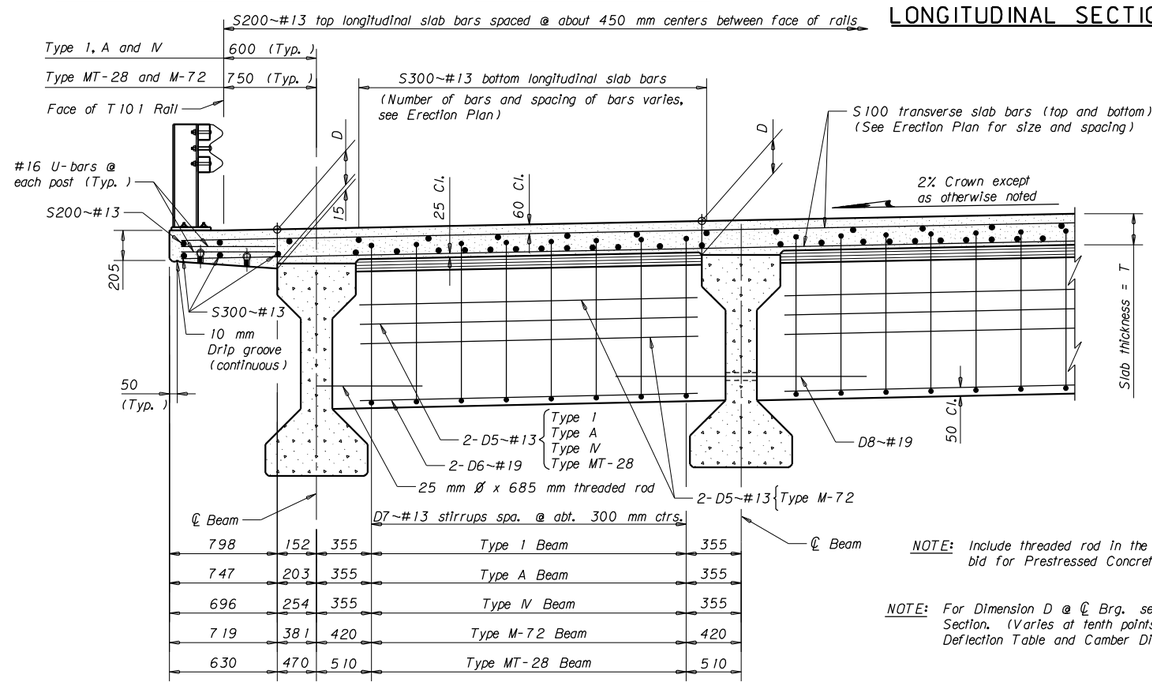

798	152	355	Type 1 Beam	355
747	203	355	Type A Beam	355
696	254	355	Type IV Beam	355
719	381	420	Type M-72 Beam	420
630	470	510	Type MT-28 Beam	510

TRANSVERSE SECTION NEAR INTERMEDIATE DIAPHRAGM AT LOW SIDE

NOTE: Include threaded rod in the unit price bid for Prestressed Concrete Beams.

NOTE: For Dimension D @ ℄ Brg. see slab Transverse Section. (Varies at tenth points) See Dead Load Deflection Table and Camber Diagram.

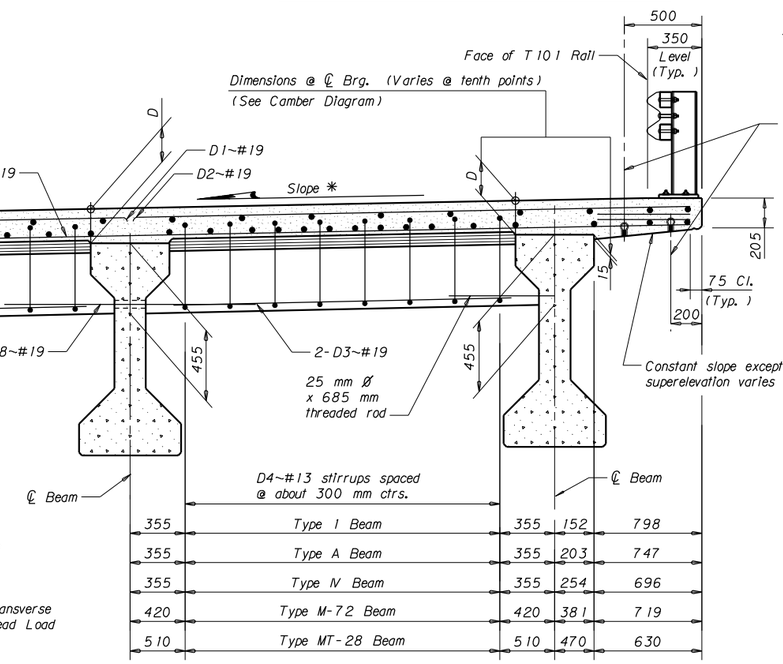

355	Type 1 Beam	355	152	798
355	Type A Beam	355	203	747
355	Type IV Beam	355	254	696
420	Type M-72 Beam	420	381	719
510	Type MT-28 Beam	510	470	630

TRANSVERSE SECTION NEAR INTERMEDIATE BENT AT HIGH SIDE

NOTES

Use details shown on this sheet only as they apply to the subject project. Beam spacing, slab thickness, size and spacing of S100 bars, number and spacing of S200 and S300~#13 bars, deck joint arrangement, rail length, rail post spacing, bill of reinforcing steel and roadway width are shown on the General Layout or Erection Plan.

When adjoining spans have a different number of longitudinal slab bars, the longitudinal bars of the shorter span are continuous over the bent and extend 900 mm into the longer span.

If the bridge is skewed, place the transverse slab reinforcing steel as shown on the Erection Plan.

See Standard Bridge Rail Type T101 drawing for rail details.

All dimensions are in millimeters.

** NOTE: The detail for end bents with expansion joints is similar to the detail for an expansion joint at an intermediate bent.

℄ 16 mm Ø threaded inserts, match rail post spacing (Typ. both sides) Offset insert longitudinally to avoid embedded rail post plate and reinforcing. Minimum safe tension working load for inserts is 8.9 kN. Include the cost of the inserts in the unit price bid for Class SD concrete.

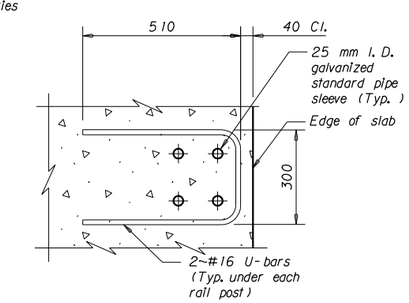

T101 RAIL POST ANCHOR BOLT ASSEMBLY REINFORCEMENT

Scale ~ 1 : 10

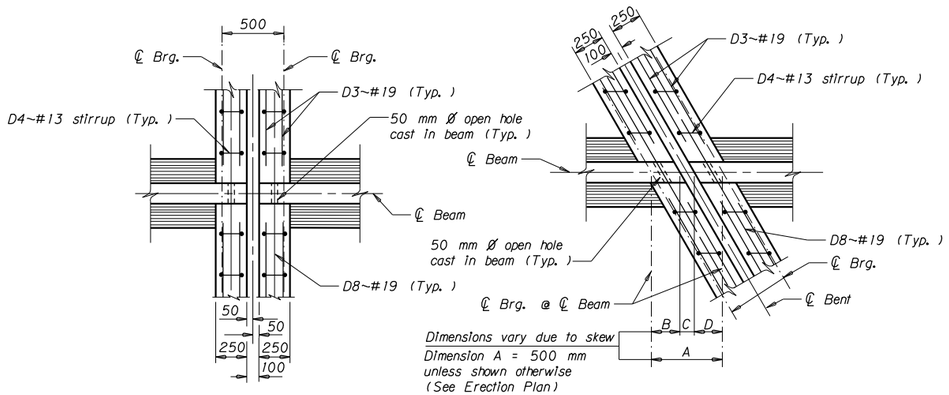

AT SQUARE BRIDGE

SECTION A-A

AT SKEWED BRIDGE

* NOTE: Detail shown is for superelevations other than normal crown.

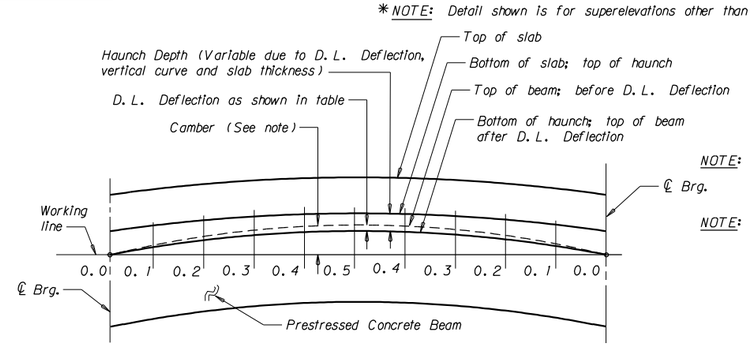

CAMBER DIAGRAM

NOTE: See Erection plan for theoretical D.L. Deflection Table for Prestressed Concrete Beams.

NOTE: Camber is noted as the distance from the working line to the top of beam and may vary from theoretically calculated D.L. deflection.

MONTANA DEPARTMENT OF TRANSPORTATION

STANDARD SLAB, RAIL AND DIAPHRAGM DETAILS

No Scale

			CONVERTED	10-12-95	L.M.S.
			DRAWN	10-12-95	L.M.S.
REVISED	3-28-08	T.J.B.	CHECKED	3-1-96	B.G.N.
REVISED	2-4-08	T.J.B.	APPROVED	12-16-96	J.P.K.
REVISED	5-1-03	L.M.S.	REVISED	1-9-97	B.G.N.
REVISED	3-5-01	L.M.S.	REVISED	2-20-97	L.M.S.

STD REF: MSL6308.STD

DRAWING NO. MSL-6

BRIDGE BUREAU