FED. ROAD DIV. NO.	STATE	FED. AID PROJ. NO.		SHEET NO.	TOTAL SHEETS
8	MONT.				

NOTE:- On skewed bridges with continuous slab, D1-#6 diaphragm bars may be placed in the bottom of the slab

NOTE:- When adjoining spans have a different number of longitudinal slab bars, the longitudinal bars of the shorter are continuous over the bent and extend 3-0 into the longer span.

NOTE:- Lap #4 longit. bars 1-3 min.

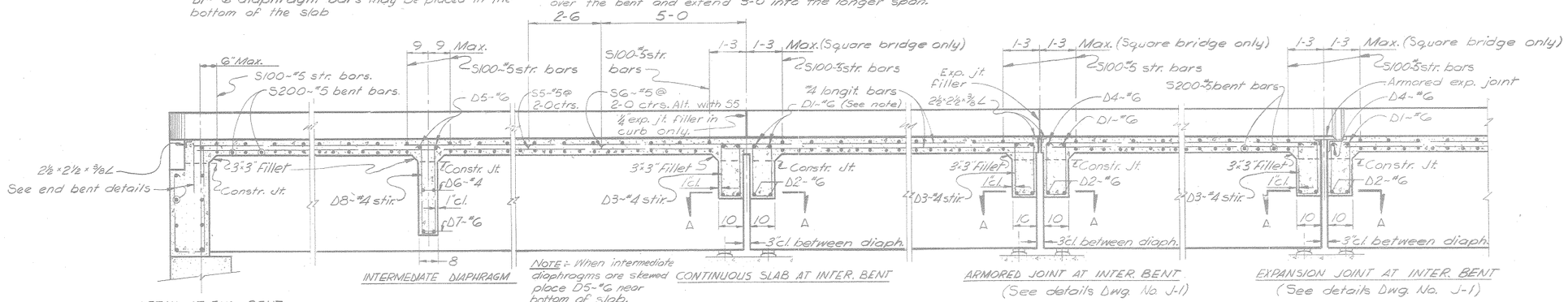

NOTE:- When intermediate diaphragms are skewed place D5-#6 near bottom of slab.

LONGITUDINAL SECTIONS

NOTE:- If bridge is skewed the transverse slab reinforcing steel shall be placed as shown on the "Erection Plan."

NOTE:- Slab forms shall be cambered to allow for settlement of forms & dead load deflection as shown in the table.

D.L. DEFLECTION FOR PRESTRESSED CONCRETE BEAMS (TYPE A)						
SPAN	TENTH POINT					
	0.0	0.1	0.2	0.3	0.4	0.5
30	0	0	0	0	0	0
35	0	1/16	1/16	1/8	1/8	1/8
40	0	1/8	3/16	3/16	1/4	1/4
45	0	1/8	1/4	5/16	3/8	3/8
50	0	3/16	5/16	7/16	1/2	1/2
55	0	1/4	3/8	1/2	7/16	5/8
60	0	1/4	1/2	5/8	11/16	3/4
65	0	5/16	9/16	11/16	13/16	7/8
70	0	3/8	5/8	7/8	15/16	1"
75	0	7/16	11/16	15/16	1 1/16	1 1/8
TYPE B BEAMS						
25	0	0	0	0	0	0
30	0	1/16	1/8	1/8	3/16	3/16
35	0	1/16	1/8	3/16	1/4	1/4
40	0					
45	0					
TYPE 4 BEAMS						
70	0	1/8	1/4	3/8	7/16	1/2
75	0	3/16	3/8	1/2	9/16	5/8
80	0	1/4	7/16	5/8	3/4	3/4
85	0	5/16	9/16	3/4	7/8	7/8
90	0	3/8	5/8	7/8	1 1/16	1 1/8
95	0	3/8	11/16	13/16	1 1/8	1 3/16
100	0	3/8	11/16	13/16	1 1/8	1 3/16

NOTE:- DETAILS SHOWN ON THIS SHEET ARE TO BE USED ONLY AS THEY APPLY TO THE SUBJECT PROJECT.

Beam spacing, slab thickness, S100 & S200 spacing, deck joint arrangement, bridge rail, bill of reinforcing steel & curb width are shown on the General Layout or Erection Plan.

Crown .02' per ft. except as otherwise noted | Crown .02' per ft. except as otherwise noted.

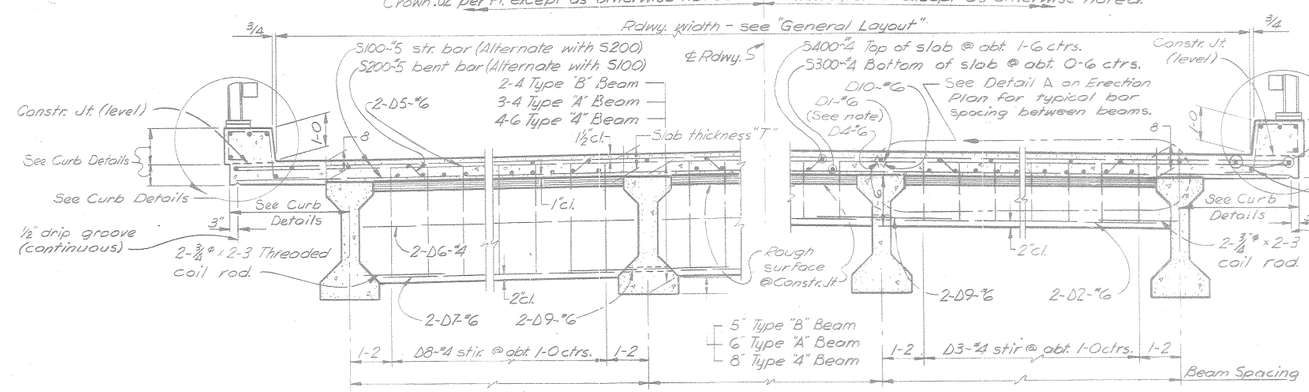

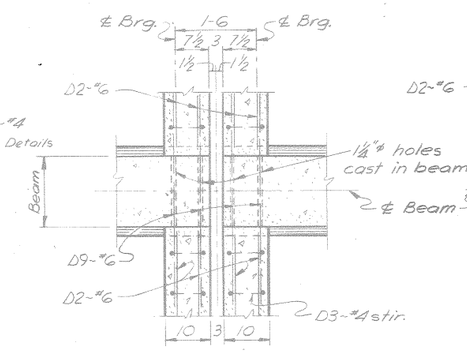

SECTION A-A SQUARE BRIDGE

Scale: ¾"=1'-0"

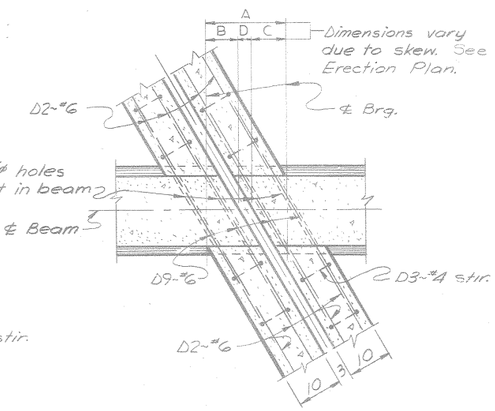

SECTION A-A SKEWED BRIDGE

Scale: ¾"=1'-0"

TRANSVERSE SECTIONS

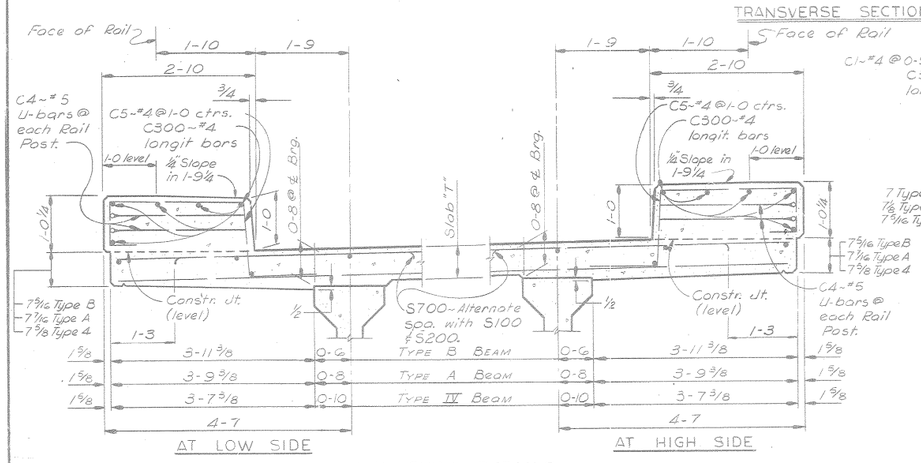

1-10 CURB DETAILS

Scale: ¾"=1'-0"

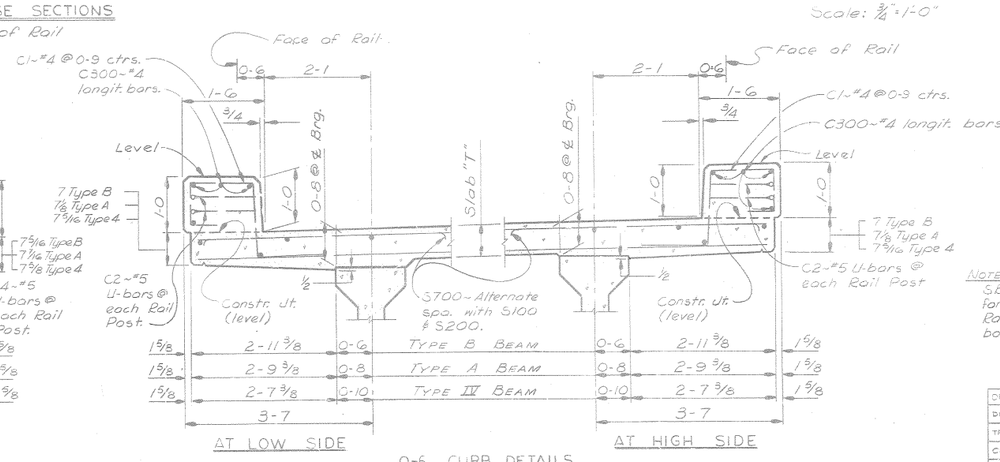

0-6 CURB DETAILS

Scale: ¾"=1'-0"

NOTE: See Dwg. No. SBR-T5 or SBR-T6 for details of Bridge Rail supporting bolts.

STATE OF MONTANA
STATE HIGHWAY COMMISSION

STANDARD SLAB, CURB, SAFETY WALK, & DIAPHRAGM DETAILS

Scale: ½"=1'-0" except as otherwise noted

DESIGNED	R. D. K	7-15-63
DRAWN	D. M. B.	8-15-63
TRACED		
CHECKED	R. D. K.	8-28-63
REVISED	R.D.K	8-18-64
REVISED		

APPROVED BY _____ BRIDGE ENGINEER

DRAWING NO. SL-1

V.R.O.