DETAILED DRAWINGS

SUPPLEMENT TO

2005 METRIC EDITION

EFFECTIVE: JANUARY 2008

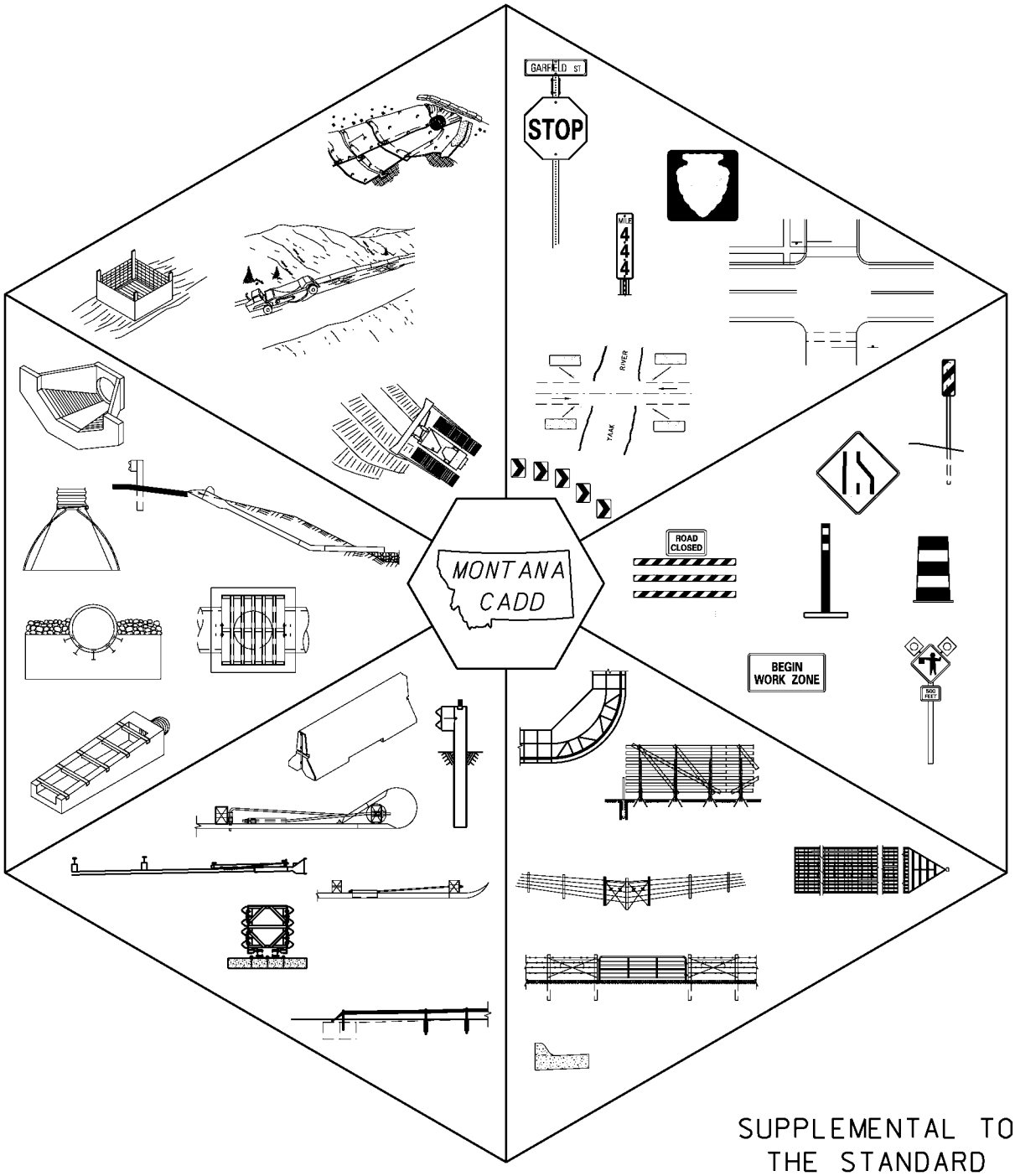

SUPPLEMENTAL TO THE STANDARD SPECIFICATIONS FOR ROAD AND BRIDGE CONSTRUCTION

serving you with pride

MONTANA DEPARTMENT OF TRANSPORTATION

DETAILED DRAWINGS

TABLE OF CONTENTS

SUPPLEMENT TO 2005 METRIC EDITION
EFFECTIVE: JANUARY 2008

STANDARD SPECIFICATION SECTION AND DRAWING TITLE	DRAWING NUMBER
SECTION 101: DEFINITIONS AND TERMS	
ABBREVIATIONS	101–05
ABBREVIATIONS	101–06
ABBREVIATIONS	101–07
ABBREVIATIONS	101–08
SYMBOLS	101–10
SECTION 203: EXCAVATION AND EMBANKMENT	
ROADWAY EMBANKMENT AT BRIDGE END	203–00
APPROACHES	203–05
MAILBOX TURNOUT	203–15
DITCH BLOCKS	203–20
SECTION 208: WATER POLLUTION CONTROL AND STREAM PRESERVATION	
SCHEDULE OF BEST MANAGEMENT PRACTICES	208–00
INLET/OUTLET PROTECTION	208–1A
WATERWAY PROTECTION	208–1B
WATER RESOURCE PROTECTION	208–1C
PRESERVATION OF EXISTING VEGETATION (SS–2)	208–02
HYDRAULIC MULCH (SS–3)	208–04
TEMPORARY SEEDING (SS–4)	208–06
SOIL BINDERS (SS–5)	208–08
STRAW MULCH (SS–6)	208–10
EROSION CONTROL BLANKETS /MATS, PLASTIC COVERS & GEOTEXTILES (SS–7)	208–12A
EROSION CONTROL BLANKETS /MATS, PLASTIC COVERS & GEOTEXTILES (SS–7)	208–12B
WOOD MULCH (SS–8)	208–14
EARTH DIKES / DRAINAGE SWALES & LINED DITCHES (SS–9)	208–16
OUTLET PROTECTION / VELOCITY DISSIPATION DEVICES (SS–10)	208–18
SLOPE DRAINS (SS–11)	208–20
SLOPE ROUGHENING (SS–12)	208–22
TERRACED SLOPES (SS–13)	208–24
VEGETATED BUFFER (SS–14)	208–26
EROSION SEEDING (SS–15)	208–28
SILT FENCE (SC–1)	208–30
DESILTING BASIN (SC–2)	208–32A
DESILTING BASIN (SC–2)	208–32B
SEDIMENT TRAP (SC–3)	208–34
CHECK DAMS (SC–4)	208–36
FIBER ROLLS (SC–5)	208–38
GRAVEL BAG BERM (SC–6)	208–40
SAND BAG BARRIERS (SC–8)	208–42

STANDARD SPECIFICATION SECTION AND DRAWING TITLE	DRAWING NUMBER

STRAW BALE BARRIERS (SC–9) 208–44
STORM DRAIN INLET PROTECTION (SC–10) 208–46A
STORM DRAIN INLET PROTECTION (SC–10) 208–46B
DUGOUT DITCH BASIN (SC–11) 208–48
WIND EROSION CONTROL (WE–1) 208–50
SNOW ACCUMULATION MANAGEMENT (SN–2) 208–52
FREEZE REDUCTION (SN–3) 208–54
STABILIZED CONSTRUCTION ENTRANCE / EXIT (TC–1) 208–56
ENTRANCE / EXIT TIRE WASH (TC–3) 208–58
TEMPORARY STREAM CROSSINGS (NS–4) 208–60

SECTION 401: COLD MILLING

SHOULDER RUMBLE STRIPS 401–02

SECTION 552: CONCRETE STRUCTURES

CONCRETE CUTOFF WALLS FOR CULVERTS 552–00
CONCRETE, RIPRAP AND BEDDING MATERIAL QUANTITIES FOR SING. AND DBL. CULVERT INSTALLATION 552–04
CONCRETE, RIPRAP AND BEDDING MATERIAL QUANTITIES FOR SING. AND DBL. CULVERT INSTALLATION 552–06
CONCRETE, RIPRAP AND BEDDING MATERIAL QUANTITIES FOR SING. AND DBL. CULVERT INSTALLATION 552–08

SECTION 603: CULVERTS, STORM DRAINS, SANITARY SEWERS, STOCKPASSES AND UNDERPASSES

CMP FLARED END TERMINAL SECTION (FETS) 603–02
PREFABRICATED RCP FLARED END TERMINAL SECTION (FETS) 603–08
PREFABRICATED RCP ARCH FLARED END TERMINAL SECTION (FETS) 603–10
RCP ROAD APPROACH CULVERT END TREATMENT (RACET) 603–12
CMP ROAD APPROACH CULVERT END TREATMENT (RACET) 603–14
PRECAST MEDIAN U–TURN CROSS DRAIN AND CONC. BEVELED END 603–17
BEDDING FOR MAINLINE & PUBLIC APPROACH CULVERTS 1200 mm EQUIVALENT & SMALLER 603–18
BEDDING FOR CULVERTS 1350 mm EQUIVALENT & LARGER 603–19
WATER TIGHT JOINT FOR REINFORCED CONCRETE PIPE 603–22
REINFORCED CONCRETE PIPE JOINT 603–24
TYPICAL FIELD CAST CONCRETE CONNECTIONS 603–26
EMBANKMENT PROTECTOR 603–28
VEHICULAR UNDERPASS AND BACKFILL RETAINER & CUTOFF WALL DETAIL 603–30
STEP BEVEL FOR CIRCULAR METAL CULVERT 603–32
BEVEL ON ARCH METAL CULVERT 603–34
CORRUGATED STEEL PIPE STOCKPASS 603–36

SECTION 604: MANHOLES, COMBINATION MANHOLES AND INLETS, AND INLETS

MEDIAN INLET COVER 604–00
CONCRETE MANHOLE 604–02
CURB INLET TYPE II 604–03
DROP INLET TYPE IV 604–04
TYPE IV DROP INLET WITH SLOTTED DRAIN 604–06

STANDARD SPECIFICATION SECTION AND DRAWING TITLE	DRAWING NUMBER
TYPE II CURB INLET WITH SLOTTED DRAIN	604–08
DROP INLETS	604–14

SECTION 606: GUARDRAIL AND CONCRETE BARRIER RAIL

METAL GUARDRAIL – WOOD POSTS	606–05A
METAL GUARDRAIL – STEEL POSTS	606–05B
STIFFENED GUARDRAIL SECTIONS	606–07
NESTED W–BEAM GUARDRAIL	606–09
METAL GUARDRAIL – 2.1 m WOOD POSTS	606–11A
METAL GUARDRAIL – 2.1 m STEEL POSTS	606–11B
OPTIONAL TERMINAL SECTION – ET–PLUS	606–13A
OPTIONAL TERMINAL SECTION – SKT 350	606–13B
ONE–WAY DEPARTURE TERMINAL SECTION	606–18
BRIDGE APPROACH SECTIONS – WOOD POSTS	606–24A
BRIDGE APPROACH SECTIONS – STEEL POSTS	606–24B
SKEWED BRIDGE APPROACH SECTIONS – WOOD POSTS	606–25A
SKEWED BRIDGE APPROACH SECTIONS – STEEL POSTS	606–25B
TAPERED CONCRETE CURB DETAIL	606–26
TAPERED CONCRETE CURB DETAIL	606–27
IMPACT ATTENUATOR – QUADGUARD	606–30A
IMPACT ATTENUATOR – TRACC	606–30B
IMPACT ATTENUATOR – QUEST	606–30C
IMPACT ATTENUATOR – QUADGUARD ASSEMBLY DETAILS	606–31A
IMPACT ATTENUATOR – TRACC ASSEMBLY DETAILS	606–31B
IMPACT ATTENUATOR – QUEST ASSEMBLY DETAILS	606–31C
CABLE GUARDRAIL	606–40
CABLE GUARDRAIL TERMINAL ANCHOR ASSEMBLY	606–41
INTERSECTING ROADWAY TERMINAL SECTION	606–46
BOX BEAM GUARDRAIL	606–50
BOX BEAM ONE–WAY DEPARTURE TERMINAL SECTION	606–52
BOX BEAM BRIDGE APPROACH SECTION – TYPES 1 & 2	606–53
BOX BEAM BRIDGE APPROACH SECTION – TYPE 3	606–53A
BOX BEAM ONE–WAY BRIDGE DEPARTURE SECTION	606–54
OPTIONAL BOX BEAM TERMINAL SECTION – WY–BET	606–55A
OPTIONAL BOX BEAM TERMINAL SECTION – BEAT	606–55B
WY–BET BOX BEAM TERMINAL SECTION DETAILS	606–56A
BEAT BOX BEAM TERMINAL SECTION DETAILS	606–56B
BOX BEAM TO W–BEAM TRANSITION SECTION	606–58
CONCRETE BARRIER RAIL	606–60
CONCRETE BARRIER RAIL ANCHORS	606–62
TALL CONCRETE BARRIER RAIL	606–64
CONCRETE BARRIER RAIL TRANSITION	606–66
CONCRETE BARRIER RAIL TERMINAL SECTION (ONE–WAY DEPARTURE)	606–68
SCHEDULE OF GUARDRAIL HARDWARE	606–80
GUARDRAIL HARDWARE	606–82
W–BEAM METAL GUARDRAIL HARDWARE	606–84
W–BEAM METAL GUARDRAIL HARDWARE	606–88
CABLE GUARDRAIL HARDWARE	606–92
CABLE GUARDRAIL HARDWARE	606–94

STANDARD SPECIFICATION SECTION AND DRAWING TITLE	DRAWING NUMBER

CABLE GUARDRAIL HARDWARE 606–95
BOX BEAM GUARDRAIL HARDWARE 606–97
BOX BEAM GUARDRAIL HARDWARE 606–98
BOX BEAM GUARDRAIL HARDWARE 606–99

SECTION 607: FENCES

FARM FENCE 607–00
INTERSTATE FENCE 607–05
FENCING DETAILS 607–10
FENCING DETAILS 607–15
FARM ENTRANCE GATES 607–20
CHAIN LINK FENCE 607–25
2.4 m WOOD SNOW FENCE W/ ANCHOR SYSTEM #1 607–30
3.6 m WOOD SNOW FENCE W/ ANCHOR SYSTEM #1 607–35
WOOD SNOW FENCE ANCHOR SYSTEM #3 AND #1 DETAILS 607–40
WOOD SNOW FENCE ANCHOR SYSTEM #2 DETAILS 607–45
WILDLIFE FENCE 607–50

SECTION 608: CONCRETE SIDEWALKS

CONCRETE SIDEWALK 608–05
NEW CONSTRUCTION PUBLIC SIDEWALK CURB RAMPS 608–15
ALTERATIONS TO EXISTING FACILITIES – PUBLIC SIDEWALK CURB RAMPS 608–20
PERPENDICULAR PUBLIC SIDEWALK CURB RAMPS 608–25
PARALLEL PUBLIC SIDEWALK CURB RAMPS 608–30
DIAGONAL PERPENDICULAR PUBLIC SIDEWALK CURB RAMPS 608–35
TRUNCATED DOMES 608–40

SECTION 609: CURBS AND GUTTERS

CONCRETE VALLEY GUTTER 609–00
MISCELLANEOUS CURBS 609–05
MEDIAN CONCRETE CURBS 609–10
CONCRETE MEDIAN CAPS 609–12

SECTION 610: ROADSIDE RE–VEGETATION

TOPSOIL AND SEEDING 610–00

SECTION 611: CATTLE GUARDS

CAST–IN–PLACE CATTLE GUARD 611–00
CAST–IN–PLACE CATTLE GUARD REBAR DETAILS 611–05
PRECAST CONCRETE BASE FOR CATTLE GUARD – APPROACHES 611–10
PRECAST CONCRETE BASE FOR CATTLE GUARD 611–15
PRECAST CONCRETE CATTLE GUARD BASE DETAILS 611–20

SECTION 613: RIPRAP AND SLOPE AND BANK PROTECTION

CONCRETE EDGE PROTECTION FOR METAL CULVERTS 613–06
CONCRETE EDGE PROTECTION FOR CONCRETE CULVERTS 613–08
CONCRETE SLOPE PROTECTION 613–10
INLET AND OUTLET HEADWALLS FOR RCP AND CMP PIPES 613–12

STANDARD SPECIFICATION SECTION AND DRAWING TITLE	DRAWING NUMBER

CULVERT RIPRAP 613–14
EMBANKMENT PROTECTION 613–16
CONCRETE DRAINAGE CHUTE 613–18

SECTION 615: IRRIGATION FACILITIES AND HEADWALLS

TRASHGUARD FOR CONCRETE IRRIGATION INLET AND OUTLET TRANSITION STRUCTURES 615–02
STANDARD CONCRETE IRRIGATION DIVISION BOXES 615–04
CONCRETE IRRIGATION INLET AND OUTLET TRANSITION FOR RCP AND CSP PIPES 615–06

SECTION 617: TRAFFIC SIGNALS AND LIGHTING

ROAD CLOSURE GATE 617–00
ROAD CLOSURE GATE DETAILS 617–02
ROAD CLOSURE GATE PIVOT ASSEMBLY 617–04
ROAD CLOSURE GATE PIVOT ASSEMBLY DETAILS 617–06
FOUR BOLT SLIP BASE 617–08
FOUR BOLT SLIP BASE DETAILS 617–10

SECTION 618: TRAFFIC CONTROL

BARRICADES, CHANNELIZING DEVICES AND OBJECT MARKERS 618–00
CONSTRUCTION SIGN DETAILS 618–01
PORTABLE SIGN SUPPORT ASSEMBLY 618–02
TWO–LANE CONSTRUCTION PROJECT 618–04
TWO–LANE CONSTRUCTION PROJECT WORK ZONES 618–08
TWO–LANE CONSTRUCTION PROJECT SEAL COAT 618–10
TWO–LANE CONSTRUCTION PROJECT LANE CLOSURE – FLAGGER CONTROLLED 618–12
TWO–LANE CONSTRUCTION PROJECT LANE CLOSURE – SIGNAL CONTROLLED 618–13
TWO–LANE EQUIPMENT ENTRANCES 618–14
TWO–LANE EQUIPMENT ENTRANCES 618–16
TWO–LANE CONSTRUCTION PROJECT DETOUR 618–18
DIVIDED FOUR–LANE CONSTRUCTION PROJECT 618–20
TEMPORARY ENTRANCE RAMP MEDIAN CROSSING 618–21
TEMPORARY EXIT RAMP MEDIAN CROSSING 618–22
DIVIDED FOUR–LANE CONSTRUCTION PROJECT WORK ZONES 618–24
DIVIDED FOUR–LANE EQUIPMENT ENTRANCES 618–27
DIVIDED FOUR–LANE MEDIAN CROSSINGS 618–28
TEMPORARY FOUR–LANE TO TWO–LANE MEDIAN CROSSING 618–30
TEMPORARY TWO–LANE TO FOUR–LANE MEDIAN CROSSING 618–32
SHORT DURATION CREW SIGNING 618–34
SHORT–TERM STATIONARY CREW SIGNING 618–36
MAINTENANCE GUIDELINE FOR SHORT–TERM TWO–LANE CRACK SEALING WORK ZONE 618–M1
MAINTENANCE GUIDELINE FOR SHORT–TERM TWO–LANE CHIP SEAL AND OVERLAY (PILOTED TRAFFIC) 618–M2
MAINTENANCE GUIDELINE FOR SHORT–TERM LANE CLOSURE ON INTERSTATE 618–M3

SECTION 619: SIGNS, DELINEATORS AND GUIDEPOSTS

SIGN CLEARANCES AND MOUNTING HEIGHTS 619–00

STANDARD SPECIFICATION SECTION AND DRAWING TITLE	DRAWING NUMBER

TYPICAL RURAL AND URBAN APPROACHES 619–02
ALUMINUM SHEET INCREMENT SIGN CONSTRUCTION DETAILS 619–04
PLYWOOD SHEET INCREMENT GUIDE SIGN CONSTRUCTION DETAILS 619–06
GUIDE SIGN CLEARANCE AND MOUNTING DETAILS 619–08
SHEET ALUMINUM OVERLAY 619–10
TUBULAR SIGN POST DETAILS 619–12
BREAKAWAY AND FOUNDATION DETAILS FOR MULTIPLE GUIDE SIGN SUPPORTS 619–13
TYPICAL STEEL POST MOUNTING DETAILS 619–16
CANTILEVER TYPE SIGN SUPPORT DETAILS FOR SIDEWALK AREAS 619–18
STRUCTURAL STEEL POST SIGN MOUNTING DETAILS 619–19
TREATED WOOD POLE SIGN MOUNTING AND SUPPORT DETAILS 619–20
TREATED WOOD POLE SIGN MOUNTING DETAILS 619–21
TREATED WOOD POLE OPTIONAL BACKBRACE 619–22
CHEVRON MOUNTING DETAILS 619–24
SPECIAL DESIGN ROUTE MARKER PANELS AND SHIELDS 619–26
SIGN HINGE DETAILS 619–30
REFERENCE POST DETAILS 619–32
DELINEATOR DETAILS 619–34
DELINEATOR PLACEMENT DETAILS 619–36
OBJECT MARKER DESIGN AND PLACEMENT DETAILS FOR OBSTRUCTIONS ADJACENT TO OR WITHIN HIGHWAYS 619–38
FLEXIBLE DELINEATORS 619–40
PERMANENT BARRICADE DESIGN DETAILS 619–42
INSTALLATION DATE TAGS 619–44

SECTION 620: PAVEMENT MARKING APPLICATION

PAVEMENT MARKINGS (LETTERS) 620–00
PAVEMENT MARKINGS (NUMBERS) 620–05
PAVEMENT MARKINGS (WORDS) 620–10
PAVEMENT MARKINGS (ARROWS) 620–15
PAVEMENT MARKINGS (SYMBOLS) 620–20

SECTION 621: REMOVE, RE–SET AND ADJUST FACILITIES

MANHOLE AND VALVE BOX ADJUSTMENT DETAILS 621–00
OPTIONAL MANHOLE AND VALVE BOX ADJUSTMENT DETAILS 621–05

MISCELLANEOUS

U–TURN MEDIAN OPENINGS ON CONTROLLED ACCESS HIGHWAYS 900–00
MAILBOX DETAIL 900–05
OPTIONAL MAILBOX DETAIL 900–10
ADJUSTABLE MONUMENT BOXES 900–15

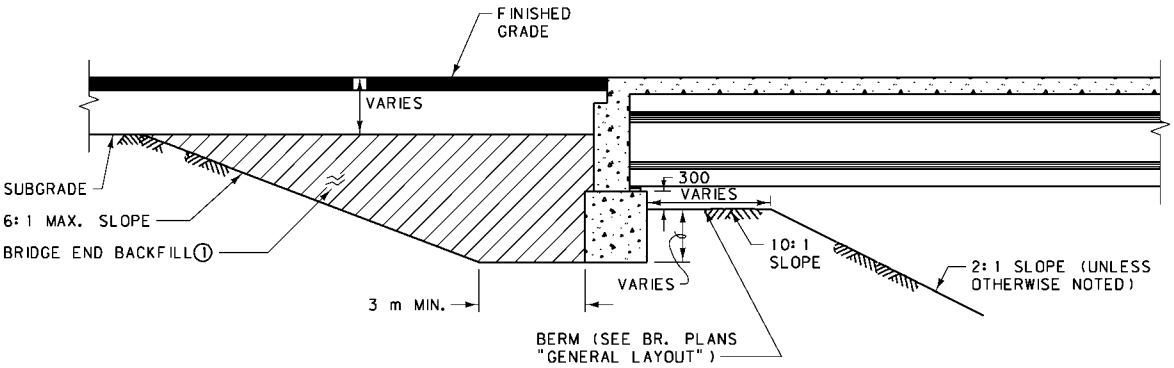

SECTION A-A

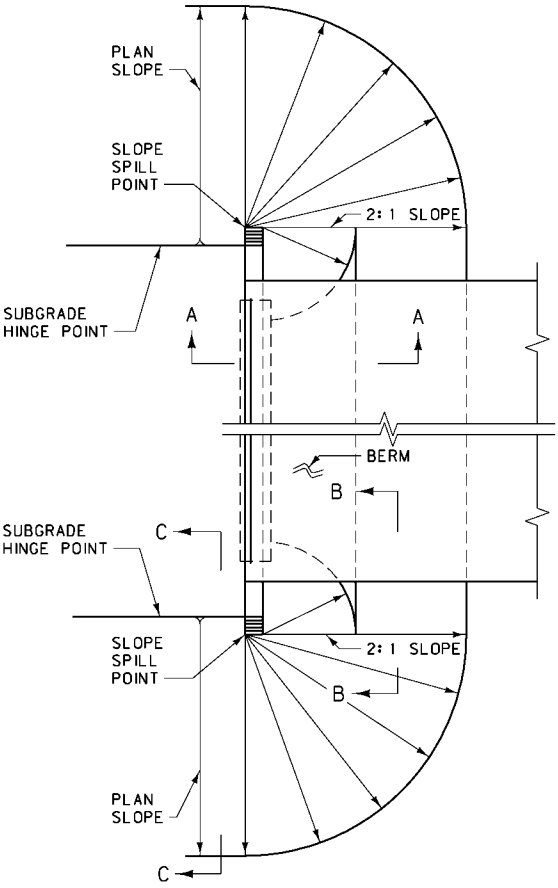

PLAN VIEW

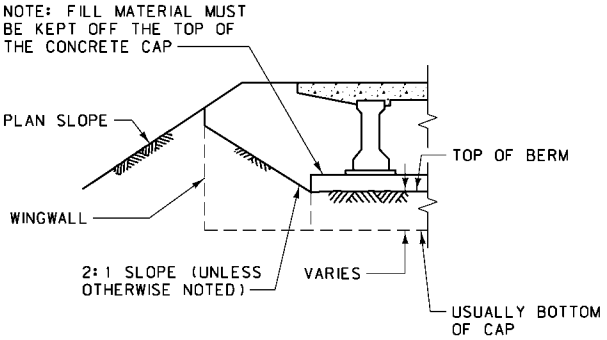

SECTION B-B

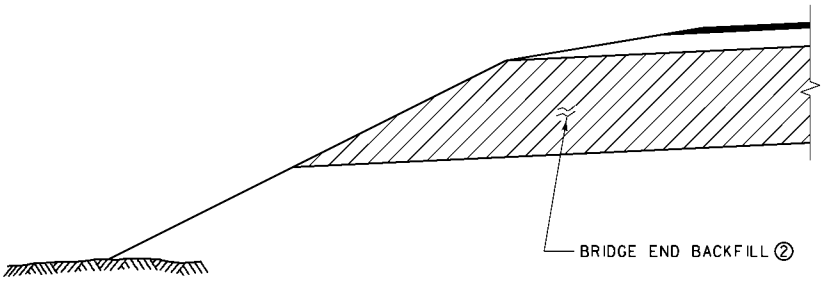

SECTION C-C

ALL DIMENSIONS ARE MILLIMETERS (mm) UNLESS OTHERWISE NOTED.

NOTES:

① DO NOT PLACE THE BRIDGE END BACKFILL UNTIL AFTER THE BACKWALL AND DECK SLAB ARE COMPLETED. PLACE ALL MATERIAL IN 155 mm LAYERS AND COMPACT IN ACCORDANCE WITH SECTION 203.03.3 OF THE STANDARD SPECIFICATIONS.

② WHEN THE BRIDGE END BACKFILL DOES NOT DAYLIGHT AT AN EMBANKMENT SLOPE TO PROVIDE DRAINAGE, EXTEND THE BRIDGE END BACKFILL 1 m BEYOND THE WINGWALL AND DAYLIGHT TO THE SLOPE FACING THE SPANNED CHANNEL.

DETAILED DRAWING	
REFERENCE STANDARD SPEC. SECTION 203	DWG. NO. 203-00
ROADWAY EMBANKMENT AT BRIDGE END	
--REVISED-- January 2008	EFFECTIVE: FEBRUARY 2005
	MDT serving you with pride — MONTANA DEPARTMENT OF TRANSPORTATION

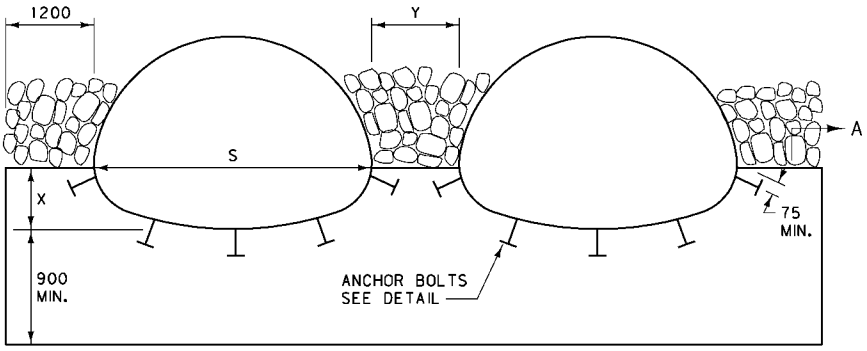

MULTIPLE ARCH CULVERTS

(METAL CULVERTS SHOWN)

X: VARIABLE (SEE DTL. DWG. NO. 603-10 FOR CONCRETE CULV. AND 603-34 FOR METAL CULV.)

Y: FOR METAL CULV. AND CULV. WITHOUT FETS:
Y = 1200 (OUTSIDE WALL TO OUTSIDE WALL)

FOR CONRETE CULV. WITH FETS: USE Y AS REQUIRED FOR PARALLEL PIPE INSTALLATION, PER DTL. DWG. NO. 613-08

NOTE: Y MAY BE INCREASED ON LARGE DIAMETER PIPES (UP TO A MAX. OF 2400) TO AID IN INSTALLATION AND BACKFILL. THE QUANTITIES SHOWN IN 552-04, 06 & 08 WERE FIGURED USING Y = 1200. ADJUST QUANTITIES AS NEEDED WHEN Y IS OTHER THAN 1200.

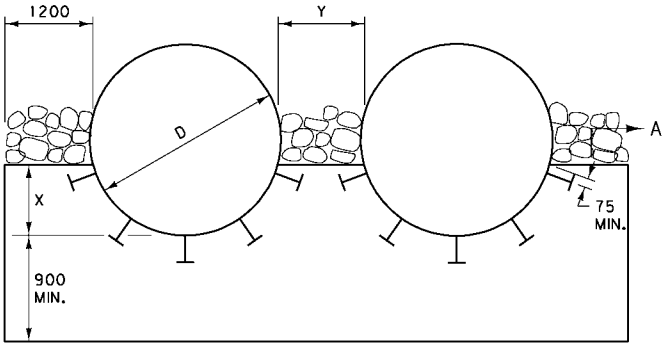

MULTIPLE ROUND CULVERTS

(METAL CULVERTS SHOWN)

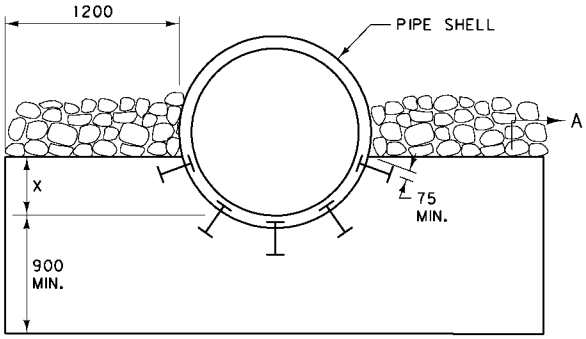

SINGLE ROUND CULVERT

(CONCRETE CULVERT SHOWN)

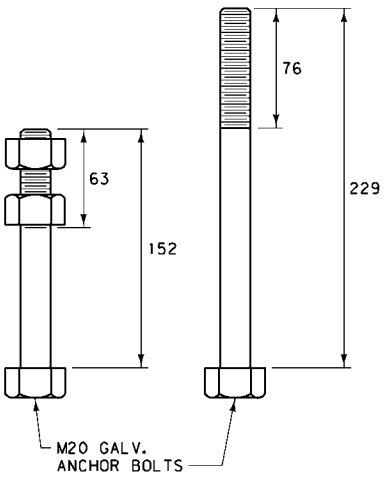

ANCHOR BOLT DETAILS

152 mm LONG FOR METAL PIPE
229 mm LONG FOR CONCRETE PIPE

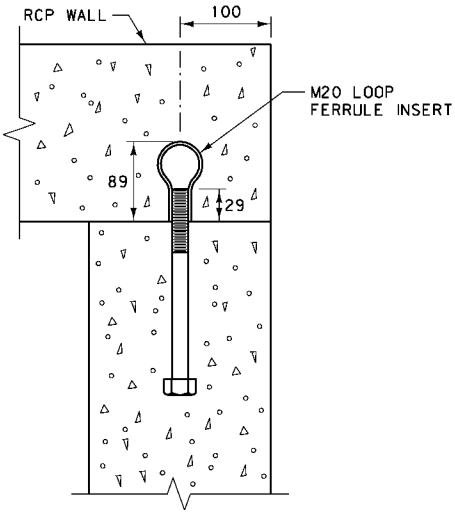

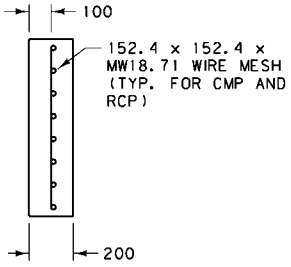

SECTION A-A

NOTES:

USE CL. "DD" CONCRETE OR EQUAL.

SEE DTL. DWG. NO. 603-18 AND 603-19 FOR BEDDING UNDER CULVERTS.

SEE DTL. DWG. NO. 613-14 FOR RIPRAP.

ALL DIMENSIONS ARE MILLIMETERS (mm) UNLESS OTHERWISE NOTED.

ANCHOR BOLT SPACING:
MIN. OF FIVE M20 GALV. ANCHOR BOLTS IN WALL. USE MAX. SPACING OF 455 mm.

DETAILED DRAWING	
REFERENCE STANDARD SPEC. SECTION 552	DWG. NO. 552-00
CONCRETE CUTOFF WALLS FOR CULVERTS	
--REVISED-- January 2008	EFFECTIVE: FEBRUARY 2005
	serving you with pride — MONTANA DEPARTMENT OF TRANSPORTATION

DIAMETER OR SPAN x RISE (mm)	CUBIC METERS OF CLASS DD CONCRETE (EACH END)								CUBIC METERS OF RIPRAP (EACH END) ① (DTL. DWG. NO. 613-14)						m³ BEDDING MATERIAL ② PER METER OF PIPE (DTL. DWG. NO. 603-19)	
	CUTOFF WALL (DTL. DWG. NO. 552-00)		CONCRETE EDGE PROTECTION (DTL. DWG. NO. 613-08)													
			1.5:1		2:1		2.5:1		1.5:1		2:1		2.5:1			
	SING.	DBL.	SING.	DBL.	SING.	DBL.	SING.	DBL.	SING.	DBL.	SING.	DBL.	SING.	DBL.	SING.	DBL.
RCP (SQ. END)																
1350	1.0	1.7	1.7	2.5	2.0	3.0	~	~	6.7	10.8	8.3	13.4	~	~	2.57	5.14
1500	1.1	1.8	1.8	2.7	2.2	3.3	~	~	7.2	11.7	9.0	14.5	~	~	2.80	5.60
1650	1.2	2.0	2.0	3.0	2.4	3.6	~	~	7.7	12.6	9.8	15.9	~	~	3.03	6.06
1800	1.2	2.1	2.2	3.2	2.6	3.9	~	~	8.4	13.7	10.4	17.0	~	~	3.27	6.54
1950	1.3	2.2	2.3	3.5	2.8	4.2	~	~	9.0	14.6	11.1	18.1	~	~	3.52	7.04
2100	1.4	2.4	2.5	3.7	3.0	4.5	~	~	9.5	15.6	11.8	19.3	~	~	3.78	7.56
2250	1.4	2.5	2.6	4.0	3.2	4.8	~	~	10.1	16.5	12.5	20.5	~	~	4.04	8.08
2400	1.5	2.6	2.8	4.2	3.4	5.1	~	~	10.6	17.5	13.2	21.7	~	~	4.31	8.62
RCPA (SQ. END)																
1650 x 1015	0.9	1.5	1.6	2.5	1.9	2.9	~	~	6.7	11.0	8.3	13.6	~	~	2.60	5.20
1855 x 1145	1.0	1.6	1.8	2.7	2.1	3.3	~	~	7.3	12.0	9.0	15.0	~	~	2.84	5.68
2235 x 1370	1.1	1.8	2.1	3.3	2.6	3.9	~	~	8.6	14.5	10.7	17.9	~	~	3.27	6.54
2590 x 1575	1.1	2.0	2.5	3.8	3.0	4.6	~	~	9.8	16.6	12.2	20.5	~	~	3.66	7.32
2920 x 1830	1.3	2.2	2.7	4.3	3.3	5.2	~	~	10.8	18.3	13.3	22.7	~	~	4.15	8.30
3100 x 1960	1.3	2.2	2.9	4.6	3.6	5.6	~	~	11.5	19.6	14.3	24.4	~	~	4.33	8.66
3505 x 2215	1.4	2.4	3.4	5.3	4.1	6.4	~	~	13.1	22.4	16.2	27.8	~	~	4.81	9.62
3910 x 2460	1.5	2.6	3.8	6.1	4.6	7.4	~	~	14.7	25.3	18.2	31.4	~	~	5.31	10.62
4285 x 2705	1.6	2.8	4.0	6.4	4.9	7.8	~	~	15.4	26.7	19.1	33.1	~	~	5.73	11.46

DIAMETER OR SPAN x RISE (mm)	CUBIC METERS OF CLASS DD CONCRETE (EACH END)								CUBIC METERS OF RIPRAP (EACH END) ① (DTL. DWG. NO. 613-14)				SLOPE	m³ BEDDING MATERIAL ② PER LIN. m OF PIPE (DTL. DWG. NO. 603-19)	
	CUTOFF WALL (DTL. DWG. NO. 552-00)		CONCRETE EDGE PROTECTION (DTL. DWG. NO. 613-08)												
	SING.	DBL.		SING.	DBL.				SING.	DBL.				SING.	DBL.
RCP (FETS)															
1350	1.3	2.2		2.0	3.1				9.3	15.7			2.0:1	2.57	5.14
1500	1.4	2.4		1.9	2.9				8.8	14.9			1.9:1	2.80	5.60
1650	1.4	2.3		2.2	3.4				9.8	16.7			1.7:1	3.03	6.06
1800	1.5	2.5		2.3	3.7				10.5	17.9			1.9:1	3.27	6.54
1950	1.5	2.6		2.6	4.1				11.6	19.8			1.8:1	3.52	7.04
2100	1.6	2.7		2.7	4.2				11.7	20.1			1.5:1	3.78	7.56
2250	1.7	2.9		2.8	4.5				12.3	21.3			1.5:1	4.04	8.08
RCPA (FETS)															
1650 x 1015	1.3	2.2		2.2	3.4				11.3	19.2			3.0:1	2.60	5.20
1855 x 1145	1.4	2.3		2.3	3.6				11.9	20.4			3.0:1	2.84	5.68
2235 x 1370	1.5	2.6		2.1	3.4				10.4	18.0			2.0:1	3.27	6.54
2590 x 1575	1.6	2.8		3.1	4.9				14.1	24.4			2.0:1	2.98	5.97

NOTES:

① QUANTITIES ARE BASED ON A THICKNESS OF 600 mm AND ARE PROPORTIONED WHEN A DIFFERENT THICKNESS IS SPECIFIED.

② BEDDING QUANTITIES FOR CONCRETE PIPES ARE BASED ON BEDDING DETAILS SHOWN ON DTL. DWG. NO. 603-19 WITH A WIDTH EQUAL TO (DIAMETER OR SPAN) + 1200 mm + (2 TIMES CONCRETE SHELL THICKNESS) AND A DEPTH EQUAL TO 600 mm + (D/4 OR R/3) + (CONCRETE SHELL THICKNESS). TO COMPUTE THE TOTAL BEDDING QUANTITY MULTIPLY BY (LENGTH OF PIPE MINUS 7.0 m).

ALL DIMENSIONS ARE MILLIMETERS (mm) UNLESS OTHERWISE NOTED.

DETAILED DRAWING

REFERENCE STANDARD SPEC. SECTION 552, 603, 613

DWG. NO. 552-04

CONCRETE, RIPRAP AND BEDDING MATERIAL QUANTITIES FOR SING. AND DBL. CULVERT INSTALLATION

--REVISED--
January 2008

EFFECTIVE: APRIL 2006

serving you with pride

MONTANA DEPARTMENT OF TRANSPORTATION

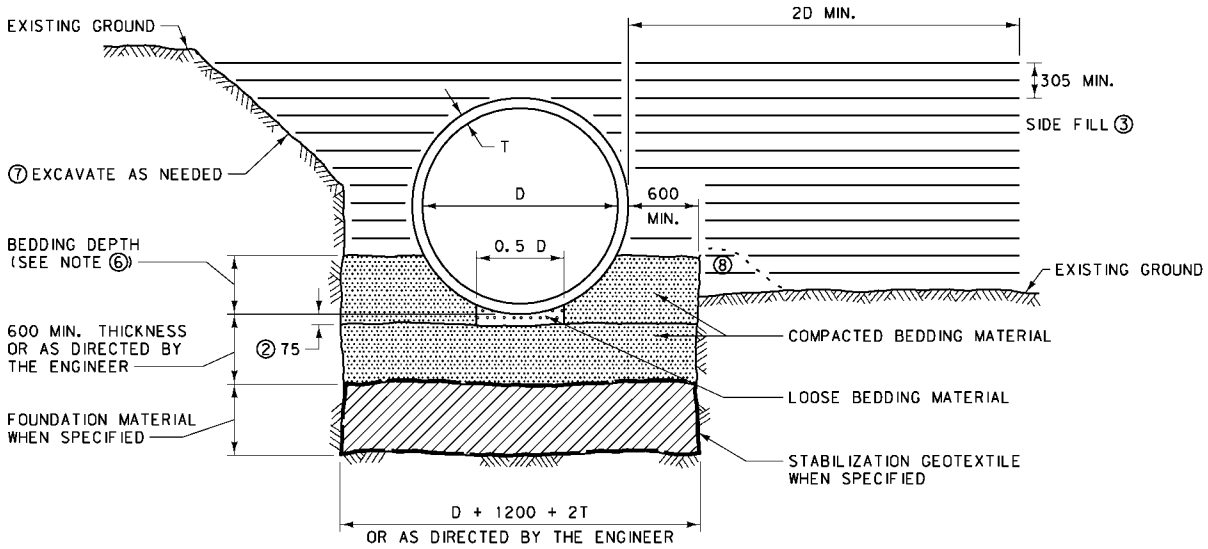

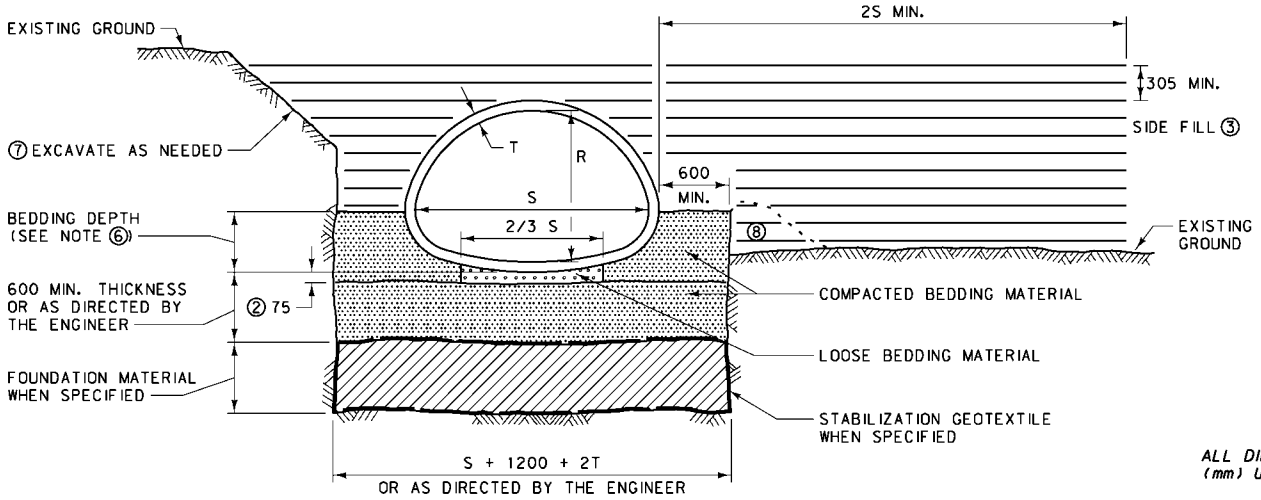

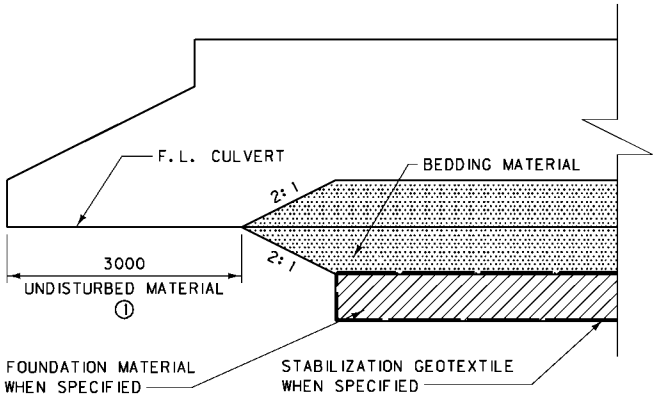

PIPE END DETAIL

NOTES:

① DO NOT EXTEND BEDDING MATERIAL TO THE END OF THE PIPE. LEAVE 3000 mm OF UNDISTURBED MATERIAL AT EACH END UNLESS OTHERWISE NOTED IN PLANS. SEE PIPE END DETAIL.

② PLACE LOOSE BEDDING MATERIAL UNIFORMLY IN THE BOTTOM OF THE TRENCH AND SHAPE TO FIT BOTTOM OF PIPE. THE MINIMUM THICKNESS BEFORE PLACING PIPE IS 75 mm. RCP IRR. REQUIRE GREATER THAN 75 mm OF LOOSE BEDDING MATERIAL TO ACCOMODATE BELL THICKNESS. AFTER LAYING CULVERT, COMPACT BEDDING MATERIAL AT HAUNCHES AND SIDES OF PIPE.

③ COMPACT SIDE FILL IN 155 mm LOOSE LAYERS TO DENSITY SPECIFIED FOR ADJACENT EMBANKMENT. SEE SECTION 203.03.3 OF THE STANDARD SPECIFICATIONS FOR THE DENSITY REQUIREMENTS.

④ SEE SECTION 701.04 OF THE STANDARD SPECIFICATIONS FOR BEDDING AND FOUNDATION MATERIAL REQUIREMENTS.

⑤ DIMENSIONS D, S, AND R ARE THE INSIDE PIPE DIAMETER, SPAN, AND RISE. DIMENSION T IS THE CULVERT SHELL THICKNESS FOR CONCRETE OR CORRUGATION WIDTH FOR METAL.

⑥ THE BEDDING DEPTH FOR CONCRETE PIPE IS D/4 + T OR R/3 + T. THE BEDDING DEPTH FOR METAL PIPE IS "X" + T. SEE DTL. DWG. NO. 603-32 AND 603-34 FOR "X" DIMENSIONS OF METAL PIPES.

⑦ EXCAVATE A SUFFICIENT AMOUNT TO PROVIDE A SAFE WORKING ENVIRONMENT AND TO ALLOW ACHIEVEMENT OF ALL CULVERT INSTALLATION AND COMPACTION REQUIREMENTS. SLOPE, BENCH OR PROVIDE SHORING FOR ALL EXCAVATIONS IN ACCORDANCE WITH THE U.S. DEPARTMENT OF LABOR, OCCUPATIONAL SAFETY AND HEALTH ADMINISTRATION (OSHA) SAFETY AND HEALTH REGULATIONS FOR CONSTRUCTION.

⑧ BUILD BERM WITH FILL MATERIAL AS NEEDED TO CONTAIN THE BEDDING MATERIAL TO THE PROPER DEPTH.

ALL DIMENSIONS ARE MILLIMETERS (mm) UNLESS OTHERWISE NOTED.

DETAILED DRAWING	
REFERENCE STANDARD SPEC. SECTION 207, 603, 701	DWG. NO. 603-19
BEDDING FOR CULVERTS 1350 mm EQUIVALENT & LARGER	
--REVISED-- January 2008	EFFECTIVE: APRIL 2006
	serving you with pride — MONTANA DEPARTMENT OF TRANSPORTATION

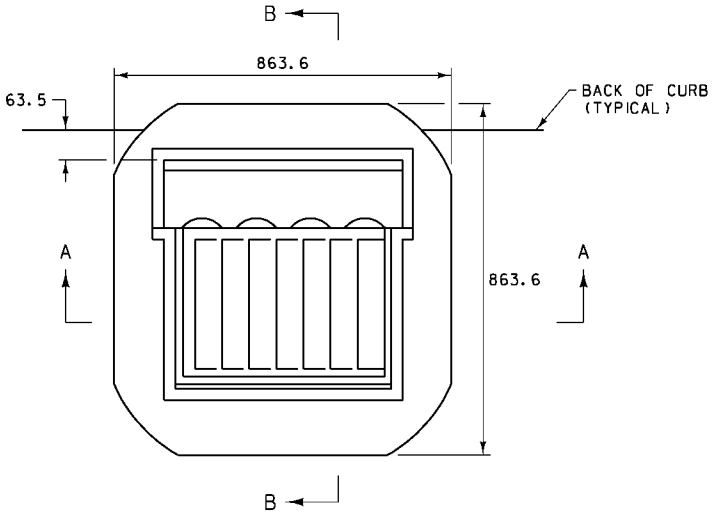

PLAN

NEENAH FOUNDRY R-3286-8V (JUNE 1992 REVISION), D & L FOUNDRY MODEL I-3559, OR APPROVED EQUAL (VANE STYLE)

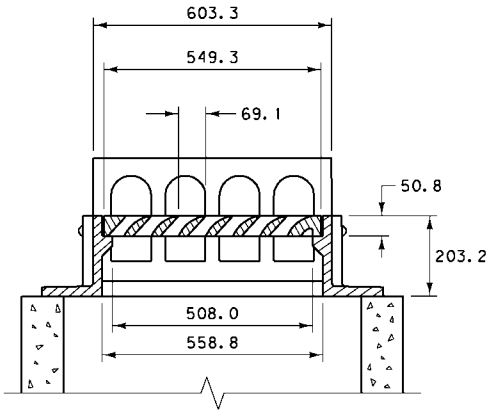

SECTION A-A

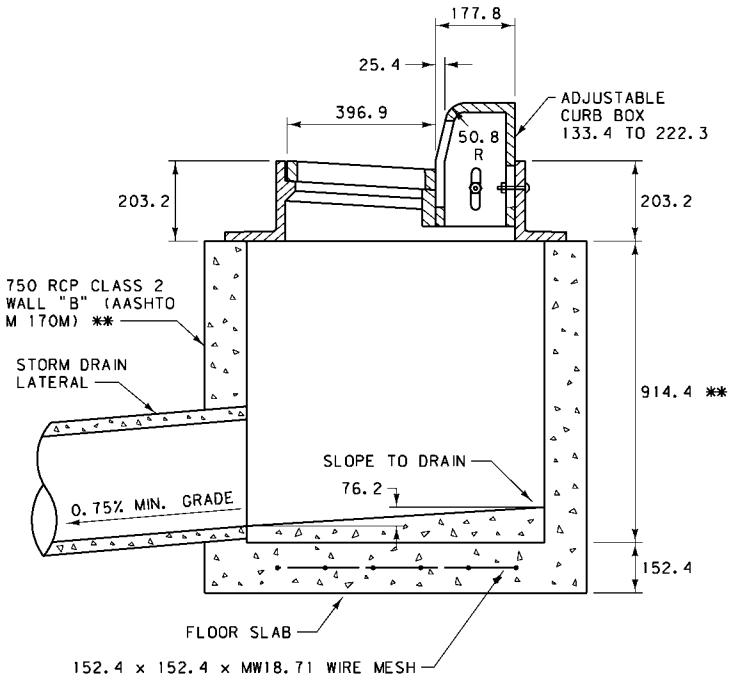

SECTION B-B

** STANDARD UNLESS OTHERWISE NOTED ON THE PLANS.

COMBINATION

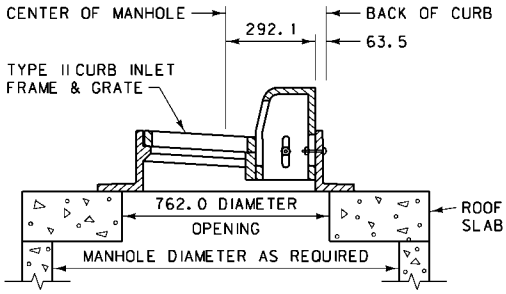

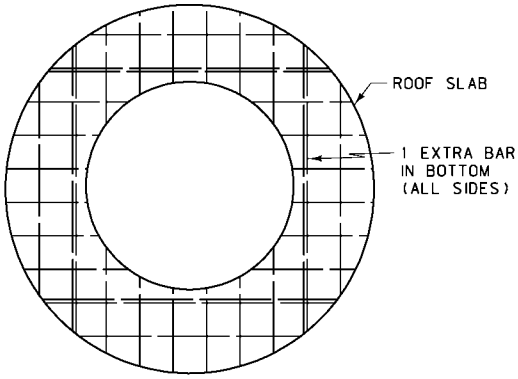

ROOF SLAB

SEE DETAILED DRAWING NO. 604-02 FOR DIAMETER, SLAB THICKNESS AND REINFORCING REQUIREMENTS FOR COMBINATION TYPE 3 MANHOLE, TYPE II CURB INLET.

NOTE:
ALL CONCRETE IS CLASS "DD" OR APPROVED EQUAL.

ALL DIMENSIONS ARE MILLIMETERS (mm) UNLESS OTHERWISE NOTED.

DETAILED DRAWING	
REFERENCE STANDARD SPEC. SECTION 604	DWG. NO. 604-03
CURB INLET TYPE II	
--REVISED-- January 2008	EFFECTIVE: FEBRUARY 2005
	serving you with pride — MONTANA DEPARTMENT OF TRANSPORTATION

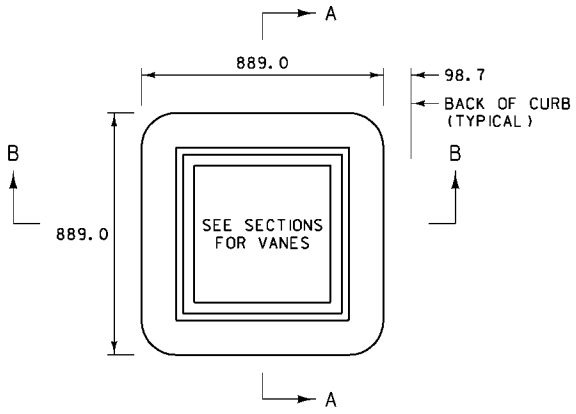

PLAN

NEENAH CASTING R-3210-L (VANE STYLE), D & L FOUNDRY MODEL I-3425, OR APPROVED EQUAL

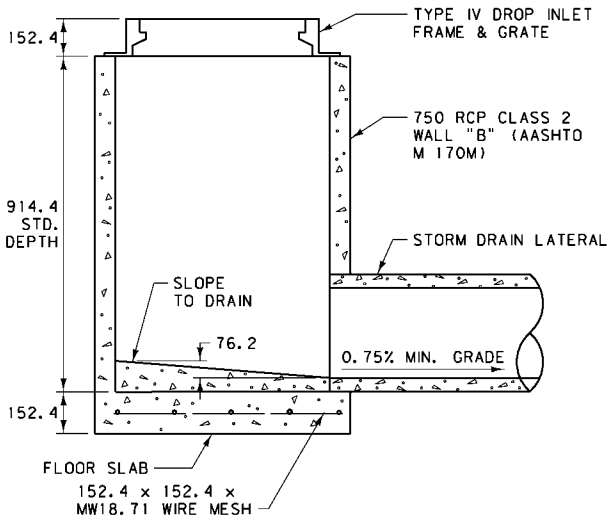

SINGLE DROP INLET
TYPE IV

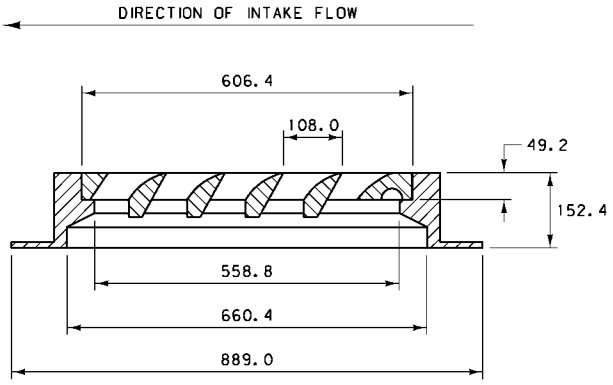

SECTION A-A

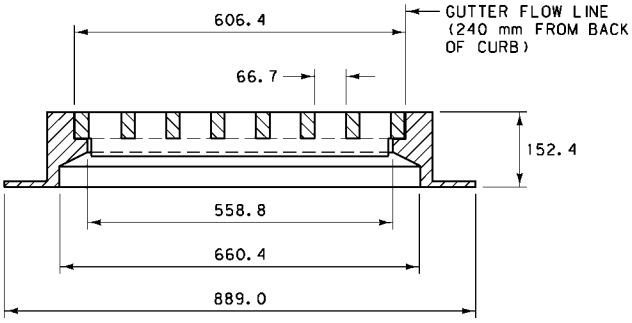

SECTION B-B

COMBINATION

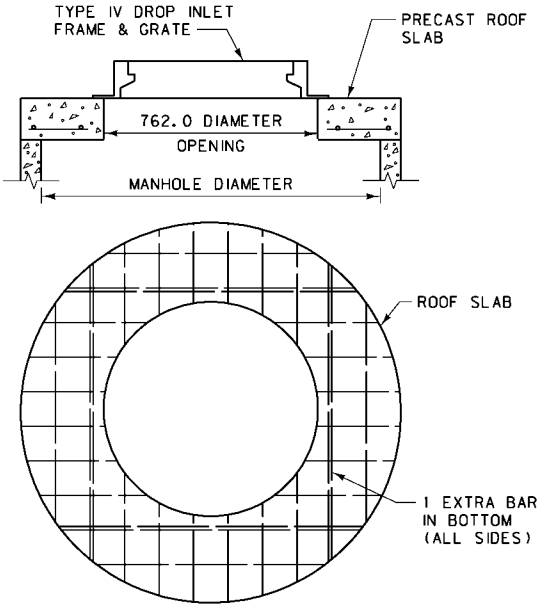

ROOF SLAB

SEE DETAILED DRAWING NO. 604-02 FOR DIAMETER, SLAB THICKNESS AND REINFORCING REQUIREMENTS FOR COMBINATION TYPE 3 MANHOLE, TYPE IV DROP INLET.

NOTE:
ALL CONCRETE IS CLASS "DD" OR APPROVED EQUAL.

ALL DIMENSIONS ARE MILLIMETERS (mm) UNLESS OTHERWISE NOTED.

DETAILED DRAWING	
REFERENCE STANDARD SPEC. SECTION 604	DWG. NO. 604-04
DROP INLET TYPE IV	
--REVISED-- January 2008	EFFECTIVE: FEBRUARY 2005
	serving you with pride — MONTANA DEPARTMENT OF TRANSPORTATION

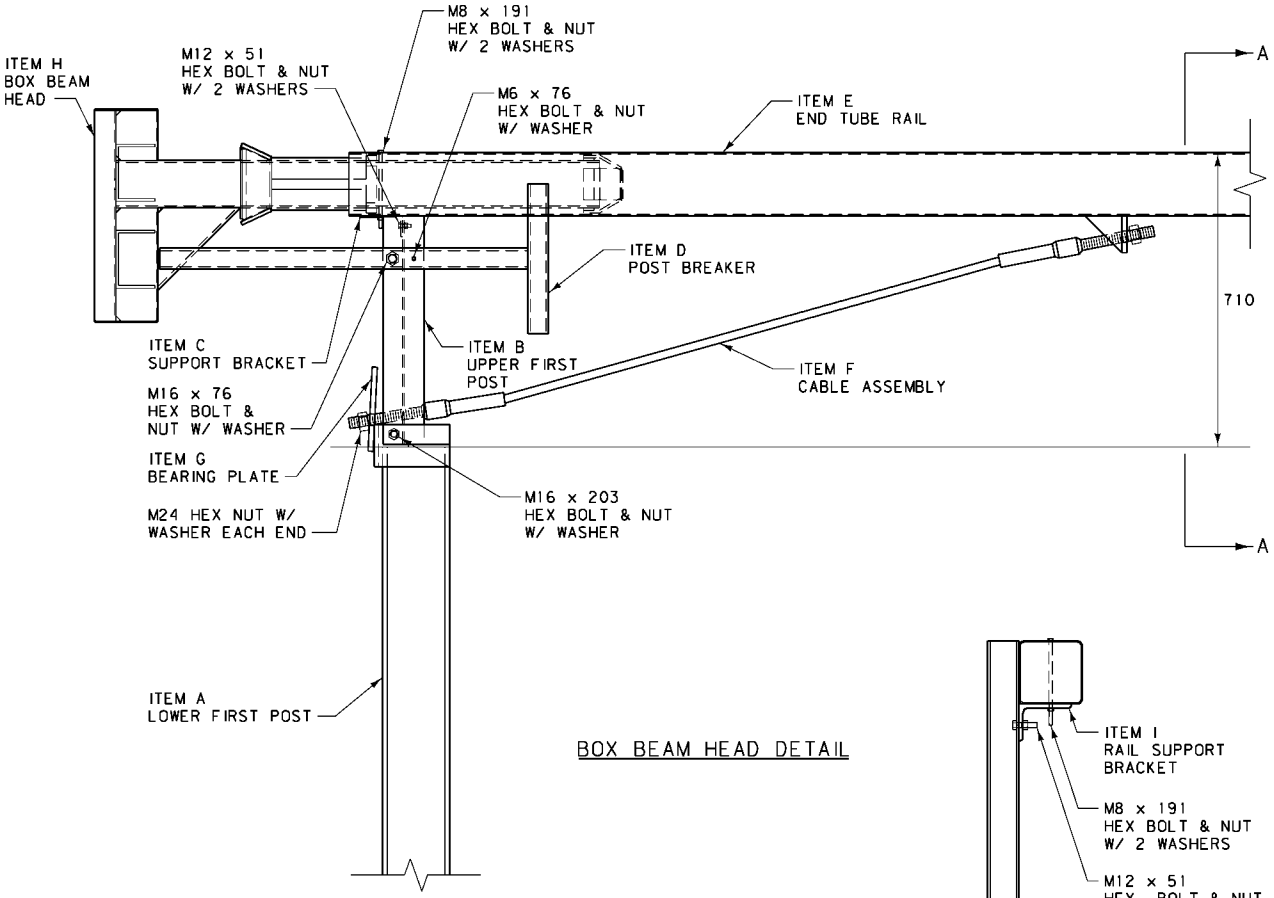

BOX BEAM HEAD DETAIL

BILL OF MATERIAL		
ITEM	QTY	DESCRIPTION
A	1	LOWER FIRST POST, W152 x 22.3 kg/m, 2440 LG.
B	1	UPPER FIRST POST, W152 x 13.4 kg/m, 546 LG.
C	1	SUPPORT BRACKET, 10 GA. (3.5 THK.) BENT PLATE
D	1	POST BREAKER
E	1	END TUBE RAIL, TS 152 x 152 x 3.2 x 3660
F	1	CABLE ASSEMBLY
G	1	BEARING PLATE
H	1	BOX BEAM HEAD
I	1	RAIL SUPPORT BRACKET, L 127 x 89 x 9.5 x 115
J	1	BOX BEAM POST W/ SOIL PLATE
K	2	END TUBE SECTION TIE PLATE
a	2	M8 x 191 HEX BOLT (GRADE 5)
b	1	M6 x 76 HEX BOLT (GRADE 2)
c	2	M12 x 51 HEX BOLT (GRADE 2)
d	8	M16 x 51 HEX BOLT (GRADE 5)
e	1	M16 x 203 HEX BOLT (GRADE 5)
f	1	M16 x 76 HEX BOLT (GRADE 5)
g	2	M8 HEX NUT
h	1	M6 HEX NUT
j	2	M12 HEX NUT
k	14	M16 HEX NUT
n	2	M24 ANCHOR CABLE HEX NUT
p	4	M8 WASHER
q	1	M6 WASHER
r	3	M12 WASHER
s	10	M16 WASHER
u	2	M24 ANCHOR CABLE WASHER

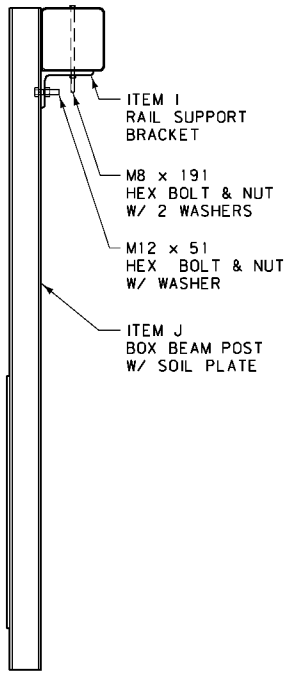

SECTION "A-A"

NOTE:

① BEAT TERMINAL SECTION TO INCLUDE 10.98 m OF BOX BEAM GUARDRAIL AS SHOWN ON DTL. DWG. NO. 606-55B.

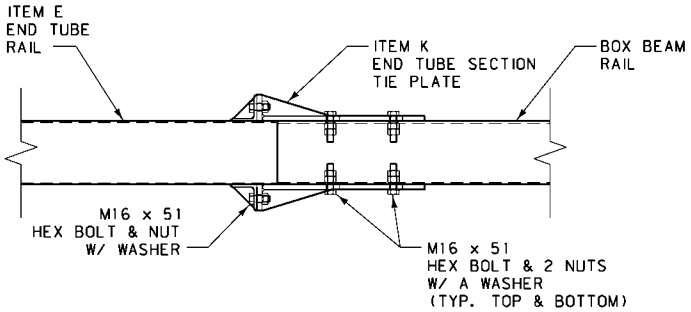

FIRST RAIL TIE DETAIL

ALL DIMENSIONS ARE MILLIMETERS (mm) UNLESS OTHERWISE NOTED.

DETAILED DRAWING

REFERENCE STANDARD SPEC. SECTION 606

DWG. NO. 606-56B

BEAT
BOX BEAM TERMINAL
SECTION DETAILS

--REVISED--
January 2008

EFFECTIVE: FEBRUARY 2005

serving you with pride

MONTANA DEPARTMENT OF TRANSPORTATION

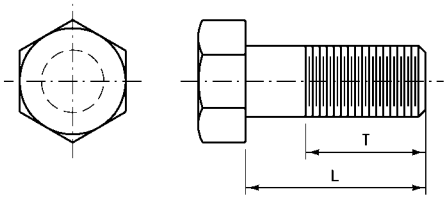

HEX BOLTS

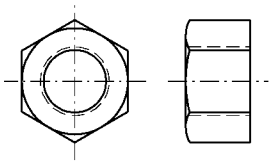

HEX NUT

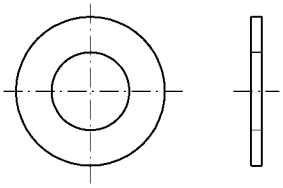

FLAT WASHERS

BOLT SIZE	DESIGNATION *	L	T (MIN.)
REGULAR HEX BOLTS			
M10	FBX10a	89	38
M10	FBX10a	191	38
M12	FBX12a	38	FULL
M12	FBX12a	63	44
M14	FBX14a	203	51
M16	FBX16a	38	FULL
M20	FBX20a	203	51
M20	FBX20a	241	51
HIGH STRENGTH HEX BOLTS			
M20	FBX20b	51	38
M20	FBX20b	102	51
M20	FBX20b	203	51
M22	FBX22b	305	AS REQUIRED
M24	FBX24b	AS REQUIRED	AS REQUIRED

NUT SIZE	DESIGNATION *
REGULAR HEX NUTS	
M8	FNX08a
M10	FNX10a
M12	FNX12a
M14	FNX14a
M16	FNX16a
M20	FNX20a
M24	FNX24a
HIGH STRENGTH HEX NUTS	
M20	FNX20b
M22	FNX22b
M24	FNX24b

WASHER SIZE	DESIGNATION *
REGULAR FLAT WASHERS	
M10	FWC10a
M12	FWC12a
M14	FWC14a
M16	FWC16a
M20	FWC20a
M24	FWC24a
HARDENED FLAT WASHERS	
M20	FWC20b

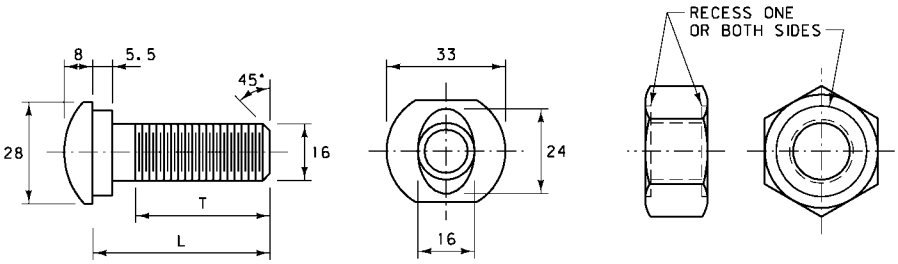

DESIGNATION *	L	T (MIN.)
FBB01	32	29
FBB02	51	44
FBB03	254	102
FBB04	457	102
FBB05	635	102

M16 GUARDRAIL BOLT & RECESSED NUT

FBB01-05*

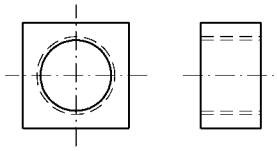

M20 SQUARE NUT

FNS20*

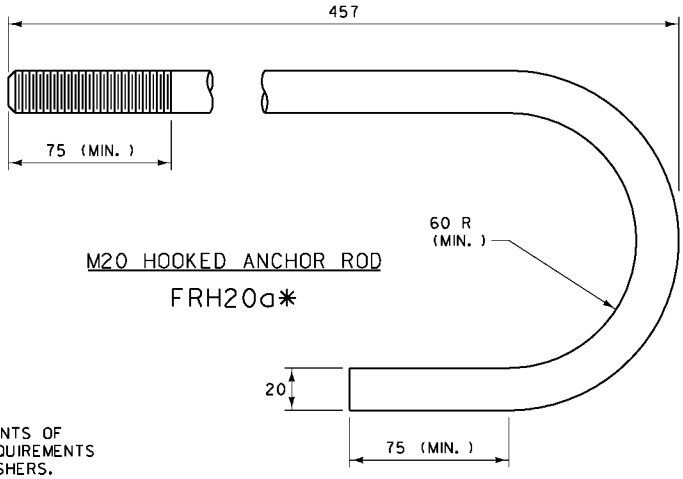

M20 HOOKED ANCHOR ROD

FRH20a*

NOTES:

1. BOLTS AND ANCHOR RODS ARE TO CONFORM TO THE REQUIREMENTS OF ASTM F 568M CLASS 4.6. NUTS ARE TO CONFORM TO THE REQUIREMENTS OF AASHTO M 291M (ASTM A 563M) CLASS 5. USE STEEL WASHERS.

2. HIGH STRENGTH BOLTS ARE TO CONFORM TO THE REQUIREMENTS OF AASHTO M 164M (ASTM A 325M) TYPE 1. HIGH STRENGTH NUTS ARE TO CONFORM TO THE REQUIREMENTS OF AASHTO M 291M (ASTM A 563M) CLASS 10S. HARDENED WASHERS ARE TO CONFORM TO THE REQUIREMENTS OF AASHTO M 293M (ASTM F 436M).

3. GALVANIZE BOLTS, NUTS AND WASHERS IN ACCORDANCE WITH AASHTO M 232M (ASTM A 153M). NO PUNCHING, DRILLING OR CUTTING IS PERMITTED AFTER GALVANIZING.

* SEE DTL. DWG. NO. 606-80 FOR SCHEDULE OF GUARDRAIL HARDWARE.

ALL DIMENSIONS ARE MILLIMETERS (mm) UNLESS OTHERWISE NOTED.

DETAILED DRAWING

REFERENCE
STANDARD SPEC.
SECTION 606

DWG. NO.
606-82

GUARDRAIL HARDWARE

--REVISED--
January 2008

EFFECTIVE: FEBRUARY 2005

serving you with pride

MONTANA DEPARTMENT OF TRANSPORTATION

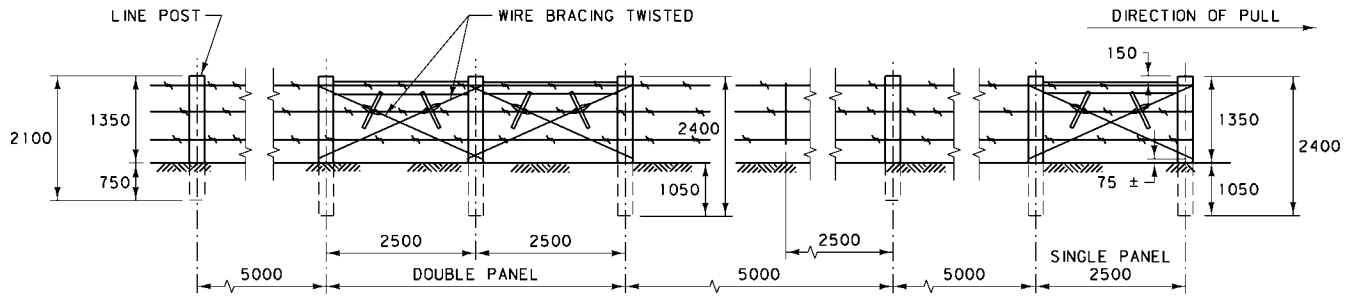

WIRE SPACING TABLE

COMBINATION WOVEN WIRE & BARBED WIRE FENCE			BARBED WIRE FENCE				WILDLIFE-FRIENDLY FARM FENCE
1200 FENCE HEIGHT		1280 FENCE HEIGHT	1.2 m FENCE HEIGHT				1.2 m FENCE HEIGHT
813 WW-2 BW *	813 WW-3 BW *	990 WW-2 BW *	3 BW	4 BW	5 BW	6 BW	
TYPE F2-813WW	TYPE F3-813WW	TYPE F2-990WW	TYPE F3	TYPE F4	TYPE F5	TYPE F6	
225, 125, 150, 140, 125, 115, 100, 90, 80, 50	150, 100, 100, 150, 140, 125, 115, 100, 90, 80, 50	150, 100, 180, 150, 140, 125, 115, 100, 90, 80, 50	400, 400, 400	300, 300, 300, 300	300, 300, 250, 200, 150	300, 200, 200, 200, 150, 150	BARBLESS WIRE (12½GAGE), 300; BARB WIRE (12½GAGE), 250; BARBLESS WIRE (12½GAGE), 250, 400

APPROXIMATE WEIGHT OF 813 mm WOVEN WIRE FABRIC (832-6-12.5) PER 100 m ROD ROLL IS 68 kg ±5 kg (NOTE: 12.5 GAGE)

APPROXIMATE WEIGHT OF 990 WOVEN WIRE FABRIC (939-6-12.5) PER 100 m ROLL IS 77 kg ±5 kg. (NOTE: 12.5 GAGE)

○ DENOTES STAPLE LOCATIONS

* OTHER WOVEN WIRE HEIGHTS AND NUMBER OF BARBED WIRE COMBINATIONS ARE AVAILABLE.

STAYS

1. USE WIRE STAYS ON ALL FENCES UNLESS WOOD STAYS ARE SPECIFIED.
2. LOCATE STAYS HALFWAY BETWEEN LINE POSTS.
3. WIRE STAYS FOR BARBED WIRE FENCING ARE 50 mm LONGER THAN THE DISTANCE BETWEEN THE TOP AND BOTTOM WIRES.
4. FOR WOVEN WIRE FENCING WITH BARBED WIRE ON TOP, EXTEND WIRE STAYS 150 mm MINIMUM BELOW THE TOP OF THE WOVEN WIRE.
5. WHEN WOOD STAYS ARE SPECIFIED, USE EITHER 50 mm ROUND, A ROUGH DIMENSION 50 mm x 50 mm, OR A 37.5 mm x 87.5 mm (NOMINAL 50 mm x 100 mm). THE STAY MUST BE OF SUFFICIENT LENGTH TO BE PLACED ON THE GROUND WITH THE TOP OF THE STAY EXTENDING 50 mm ABOVE THE TOP WIRE. ATTACH EACH WIRE TO THE WOOD STAYS USING 44 mm x 9 GAGE STAPLES. WOOD STAYS DO NOT NEED TO BE TREATED.

NOTES:

"M" DENOTES METAL POSTS, EG. TYPE F3M.
"W" DENOTES WOOD POSTS, EG. TYPE F4W.

SEE DTL. DWG. NO. 607-05 FOR SINGLE AND DOUBLE PANEL DETAILS.
SEE DTL. DWG. NO. 607-10 FOR ADDITIONAL FENCING DETAILS.

SEE THE STANDARD SPECIFICATIONS FOR POST REQUIREMENTS.

ALL DIMENSIONS ARE MILLIMETERS (mm) UNLESS OTHERWISE NOTED.

DETAILED DRAWING

REFERENCE STANDARD SPEC. SECTION 607

DWG. NO. 607-00

FARM FENCE

--REVISED--
January 2008

EFFECTIVE: FEBRUARY 2005

serving you with pride

MONTANA DEPARTMENT OF TRANSPORTATION

CONCRETE CURBS

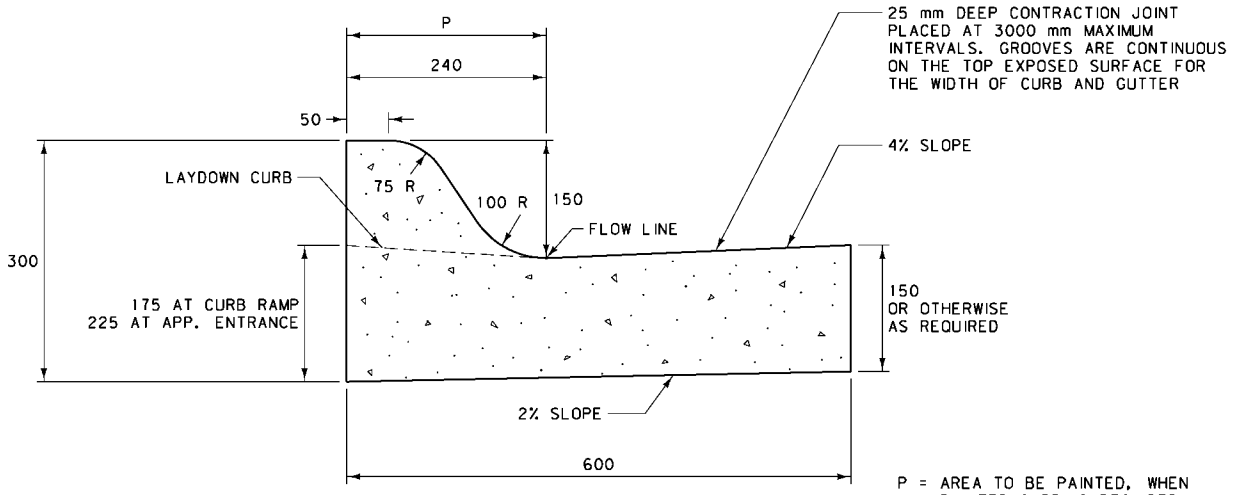

P = AREA TO BE PAINTED, WHEN PAINTED CURB IS REQUIRED (30.7 m² PER 100 m OF CURB)

CURB & GUTTER SECTION

0.110 m³ CONC. PER METER OF CURB FOR 150 mm GUTTER. *

JOINTS:

(A) WHEN INTEGRAL WITH, TIED TO, OR PLACED AGAINST PORTLAND CEMENT CONCRETE PAVEMENT (P.C.C.P.): MATCH TRANSVERSE CONTRACTION AND/OR EXPANSION JOINTS IN THE ADJACENT P.C.C.P. SLAB. IF REQUIRED, EXTEND 13 mm MIN. WIDTH PREFORMED EXPANSION JOINTS COMPLETELY THROUGH CURB AND GUTTER THE SAME WIDTH AS THE P.C.C.P. SLAB JOINT. FILL CURB AND GUTTER EXPANSION JOINTS WITH PREFORMED EXPANSION JOINT FILLER.

(B) ALL OTHER CASES:
SPACE CONTRACTION JOINTS IN CURB AND GUTTER AT 3000 mm INTERVALS OR LESS EXCEPT AS SPECIFIED IN (A) ABOVE. EXTEND 13 mm MIN. WIDTH EXPANSION JOINTS COMPLETELY THROUGH CURB AND GUTTER EVERY 30 m (± 10 METERS), AT INTERVALS EQUAL TO THE NEAREST MULTIPLE OF THE CONTRACTION JOINT INTERVAL, AND FILL WITH EXPANSION JOINT FILLER.

(C) CONTRACTION JOINTS:
CONTRACTION JOINTS ARE 3 mm MIN. AND 10 mm MAX. IN WIDTH. FORM JOINTS BY SAWING OR SCORING TO A MINIMUM DEPTH OF 25 mm. FORM SCORED JOINTS BY A TOOL WHICH WILL LEAVE ROUNDED CORNERS AND DESTROY AGGREGATE INTERLOCK TO A MINIMUM DEPTH OF 25 mm.

(D) OTHER JOINTS:
SEPARATE THE CURB AND GUTTER FROM ADJACENT SIDEWALK AT POINTS SHOWN ON DTL. DWG. NO. 608-05 WITH A BOND BREAKER MATERIAL, EXCEPT AT APPROACH LAYDOWN CURB LOCATIONS, WHICH REQUIRE SEPARATION USING 13 mm MIN. WIDTH PREFORMED EXPANSION JOINT MATERIAL. PLACE 13 mm MIN. WIDTH PREFORMED EXPANSION JOINT MATERIAL AT ALL CURB RETURNS, BRIDGES, DROP INLETS, AND WHERE MEETING CURB AND GUTTER IN PLACE.

EXPANSION JOINT FILLER MATERIAL:

USE PREFORMED EXPANSION JOINT FILLER MEETING THE REQUIREMENTS OF STD. SPEC. 707.

BOND BREAKER MATERIAL:

USE A 6.8 OR 13.6 KILOGRAM ROOFING FELT MATERIAL, OR OTHER PRODUCT AS APPROVED BY THE ENGINEER DO NOT USE EXPANSION JOINT MATERIAL.

RADII:

MINIMUM CURB RETURN RADII = 3050 mm. 4575 mm RADII ARE DESIRABLE FOR STREETS.

CONCRETE:

UNLESS OTHERWISE SPECIFIED, CONSTRUCT CONCRETE CURBS AND CONCRETE INTEGRAL CURB AND GUTTER WITH CLASS "D" CONCRETE OR APPROVED EQUAL.

* QUANTITIES FOR ESTIMATING PURPOSES ONLY.

BITUMINOUS CURBS

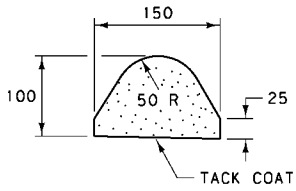

CURB SECTION

1 m³ OF MATERIAL WILL MAKE ABOUT 89 METERS OF CURB. *

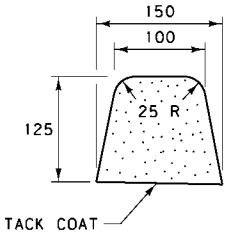

CURB SECTION

1 m³ OF MATERIAL WILL MAKE ABOUT 64 METERS OF CURB. *

NOTES:

WHEN CURB IS USED IN CONJUNCTION WITH GUARDRAIL, USE THE 100 mm TYPE. OTHERWISE, THE CONTRACTOR MAY USE EITHER SECTION.

CONFORM ALL MATERIALS AND CONSTRUCTION TO THE STANDARD SPECIFICATIONS FOR BITUMINOUS CURB.

CONCRETE MAY BE SUBSTITUTED FOR THE BITUMINOUS MATERIAL. WHEN CONCRETE IS USED, CONSTRUCT CURB IN ACCORDANCE WITH STANDARD SPECIFICATION 609.

ALL DIMENSIONS ARE MILLIMETERS (mm) UNLESS OTHERWISE NOTED.

DETAILED DRAWING	
REFERENCE STANDARD SPEC. SECTION 609	DWG. NO. 609-05
MISCELLANEOUS CURBS	
--REVISED-- January 2008	EFFECTIVE: FEBRUARY 2005
	serving you with pride — MONTANA DEPARTMENT OF TRANSPORTATION

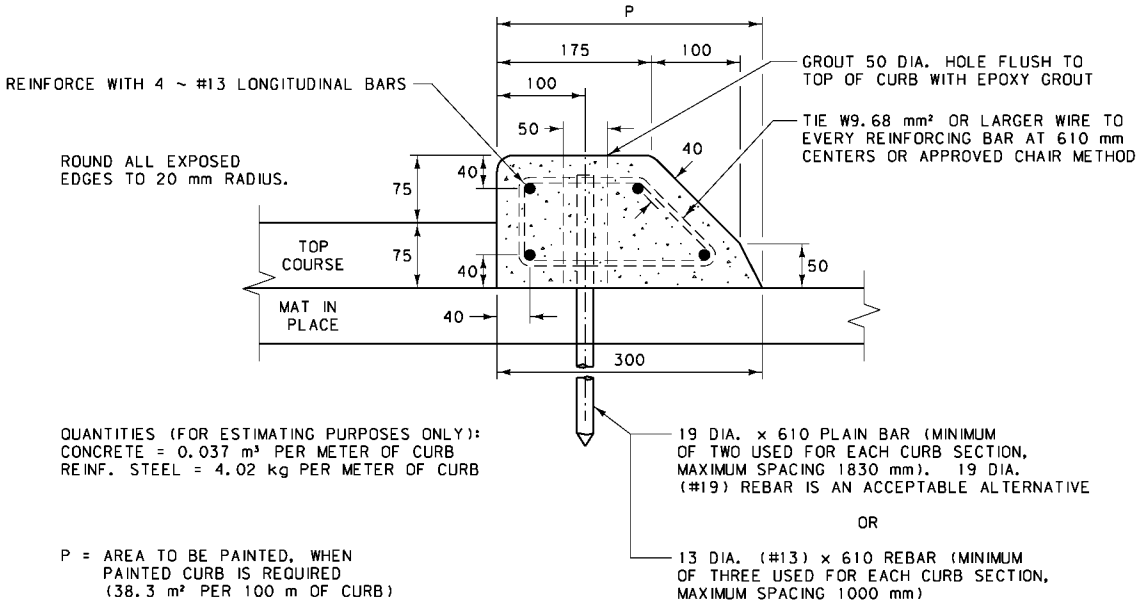

TYPE "A" - MAT IN PLACE

CONSTRUCTION:

CURBS MAY BE CONSTRUCTED USING ANY OF THE FOLLOWING THREE METHODS:
(1) PRECAST
(2) CAST IN PLACE
(3) CONSTRUCTED BY THE USE OF AN APPROVED CURB FORMING OR SLIP FORM MACHINE.

WHEN USING EITHER METHOD (2) OR (3), REINFORCING STEEL IS NOT REQUIRED, WITH THE EXCEPTION OF THE PINS, AND THE CURBS ARE SCORED OR SAWN TO A DEPTH OF 25 mm TO FORM CONTRACTION JOINTS AT INTERVALS OF 3000 mm OR LESS. EXTEND 13 mm MIN. WIDTH EXPANSION JOINTS COMPLETELY THROUGH CURB EVERY 30 m (± 10 METERS), AT INTERVALS EQUAL TO THE NEAREST MULTIPLE OF THE CONTRACTION JOINT INTERVAL AND FILL WITH PREFORMED EXPANSION JOINT FILLER MEETING STD. SPEC. 707.

FORM PRECAST CURBS IN THEIR INVERTED POSITION, IN LENGTHS NOT LESS THAN 1220 mm, OR MORE THAN 3050 mm.

MATERIAL:

CONSTRUCT CURBS OF CLASS "D" CONCRETE, OR AN APPROVED EQUIVALENT MIX.

EPOXY BINDER FOR GROUTING MUST MEET THE REQUIREMENTS OF AASHTO M 235M (ASTM C 881M).

ALL DIMENSIONS ARE MILLIMETERS (mm) UNLESS OTHERWISE NOTED.

DETAILED DRAWING	
REFERENCE STANDARD SPEC. SECTION 609	DWG. NO. 609-10
MEDIAN CONCRETE CURBS	
--REVISED-- January 2008	EFFECTIVE: FEBRUARY 2005
	serving you with pride — MONTANA DEPARTMENT OF TRANSPORTATION

NOTES:

13 mm EXPANSION JOINTS ARE SHOWN AS DARK SOLID LINES FOR VISUAL PURPOSES.

BOND BREAKER IS SHOWN AS DARK DASHED LINE FOR VISUAL PURPOSES.

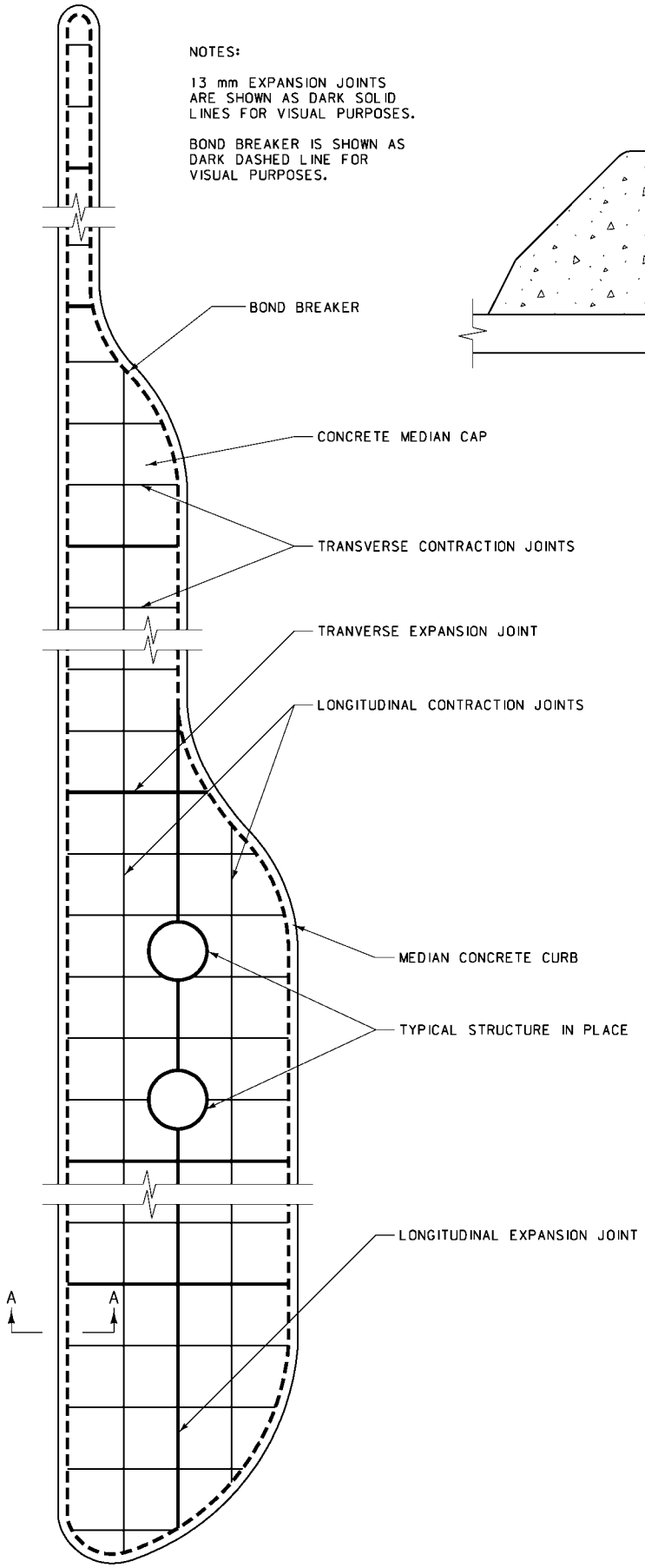

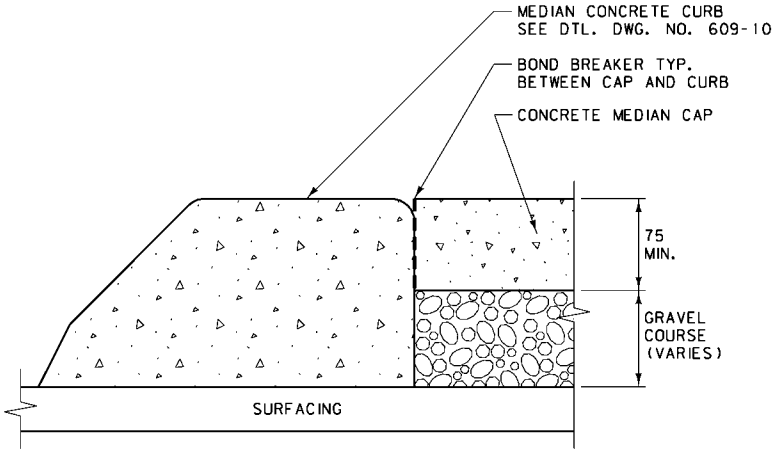

SECTION A-A

NOTES:

INSTALL PREFORMED EXPANSION JOINT FILLER, STD. SPEC. 707.01.3, AT ALL EXPANSION JOINTS, FOR THE FULL THICKNESS OF THE CONCRETE MEDIAN CAP.

INSTALL A BOND BREAKER FOR THE FULL THICKNESS OF THE CONCRETE MEDIAN CAP BETWEEN THE CAP AND THE CURB. USE A 6.8 OR 13.6 KILOGRAM ROOFING FELT MATERIAL, OR OTHER PRODUCT AS APPROVED BY THE ENGINEER, FOR THE BOND BREAKER. DO NOT USE EXPANSION JOINT MATERIAL AS A BOND BREAKER.

ALL JOINTS MUST BE STRAIGHT AND PERPENDICULAR TO THE CENTERLINE AND THE SURFACE OF THE MEDIAN CAP. WHERE PRACTICAL, ALIGN ALL JOINTS WITH LIKE JOINTS IN ADJOINING WORK. USE JOINTS TO OUTLINE ALL PANELS IN THE MEDIAN CAP. USE SQUARE PANELS WHEN PRACTICAL. ON NARROW MEDIAN CAPS RECTANGULAR SHAPED PANELS ARE ACCEPTABLE.

CONTRACTION JOINTS MAY NOT BE MORE THAN 3 mm WIDE AND NOT LESS THAN 25 mm IN DEPTH AND MAY BE CUT BY A GROOVE FORMING TOOL.

LOCATE EXPANSION JOINTS AT ALL JOINTS BETWEEN THE MEDIAN CAP AND STRUCTURES IN PLACE AND EVERY 30 METERS (± 10 METERS) AT INTERVALS EQUAL TO THE NEAREST MULTIPLE OF THE CONTRACTION JOINT INTERVAL. USE A LONGITUDINAL EXPANSION JOINT IN THE CENTERLINE OF ALL MEDIAN CAPS WIDER THAN 3660 mm.

USE LONGITUDINAL CONTRACTION JOINTS IN MEDIAN CAPS WIDER THAN 1830 mm, WITH SPACING NOT TO EXCEED 1830 mm. SPACE TRANSVERSE CONTRACTION JOINTS EQUAL TO THE LONGITUDINAL SPACING ON MEDIAN CAPS WIDER THAN 1830 mm. FOR MEDIAN CAPS NARROWER THAN 1830 mm, SPACE TRANSVERSE CONTRACTION JOINTS 3000 mm OR LESS.

ALL DIMENSIONS ARE MILLIMETERS (mm) UNLESS OTHERWISE NOTED.

DETAILED DRAWING	
REFERENCE STANDARD SPEC. SECTION 609	DWG. NO. 609-12
CONCRETE MEDIAN CAPS	
--REVISED-- January 2008	EFFECTIVE: FEBRUARY 2005
	serving you with pride — MONTANA DEPARTMENT OF TRANSPORTATION

ROUND PIPE

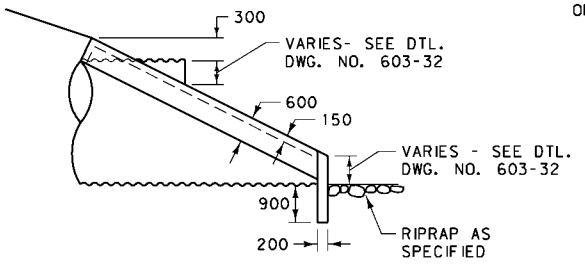

SIDE ELEVATION

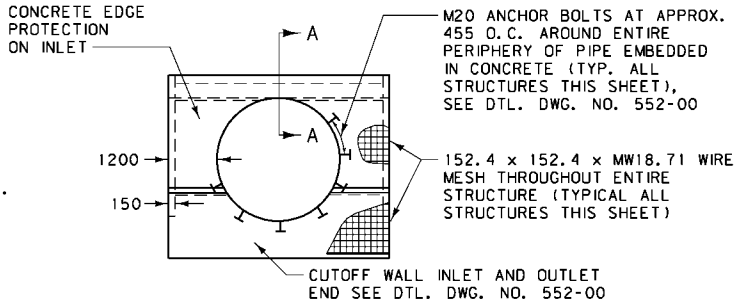

FRONT ELEVATION

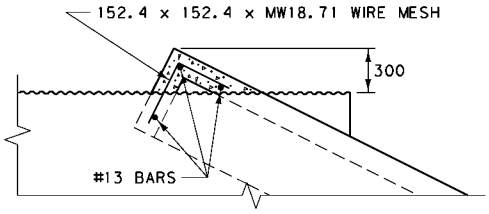

SECTION A-A

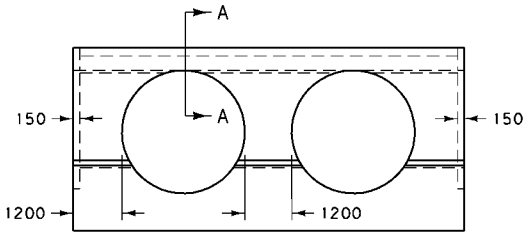

FRONT ELEVATION MULTIPLE PIPES

ARCH PIPE

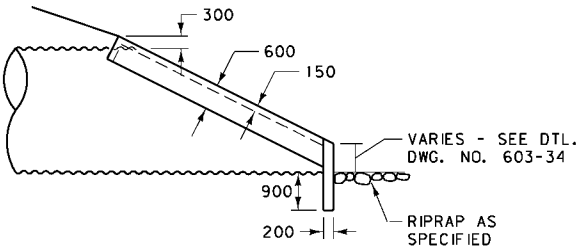

SIDE ELEVATION

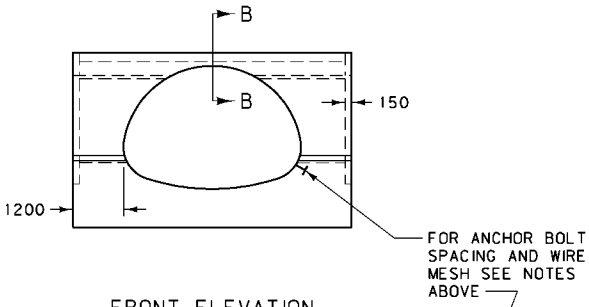

FRONT ELEVATION

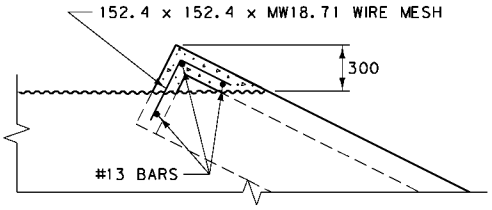

SECTION B-B

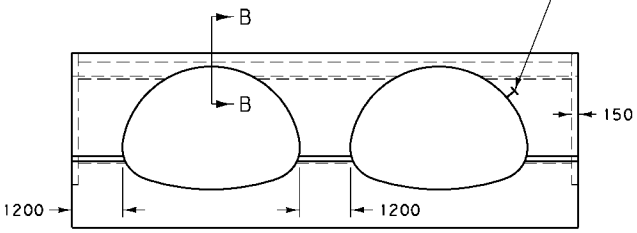

FRONT ELEVATION MULTIPLE PIPES

NOTE:
ALL CONCRETE IS CLASS "DD" OR EQUAL.

ALL DIMENSIONS ARE MILLIMETERS (mm) UNLESS OTHERWISE NOTED.

DETAILED DRAWING	
REFERENCE STANDARD SPEC. SECTION 613	DWG. NO. 613-06
CONCRETE EDGE PROTECTION FOR METAL CULVERTS	
--REVISED-- January 2008	EFFECTIVE: FEBRUARY 2005
	serving you with pride — MONTANA DEPARTMENT OF TRANSPORTATION

ROUND PIPE

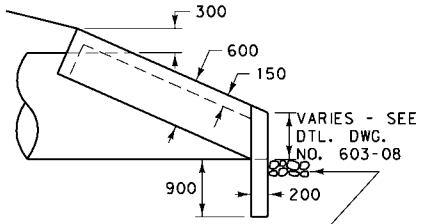

SIDE ELEVATION

RIPRAP AS SPECIFIED

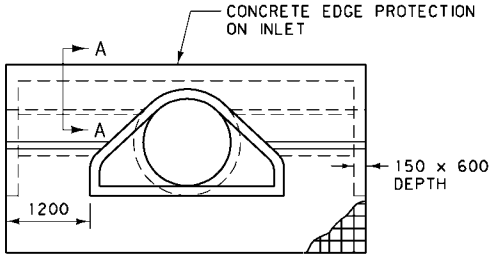

FRONT ELEVATION

ARCH PIPE

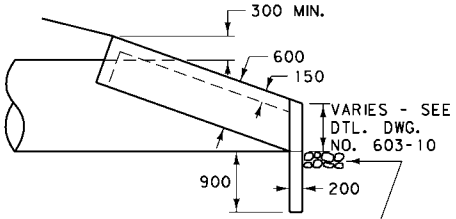

SIDE ELEVATION

RIPRAP AS SPECIFIED

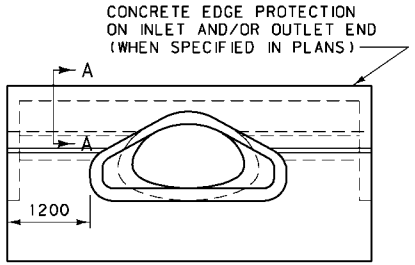

FRONT ELEVATION

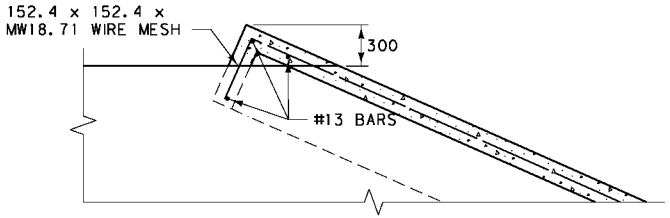

SECTION A-A

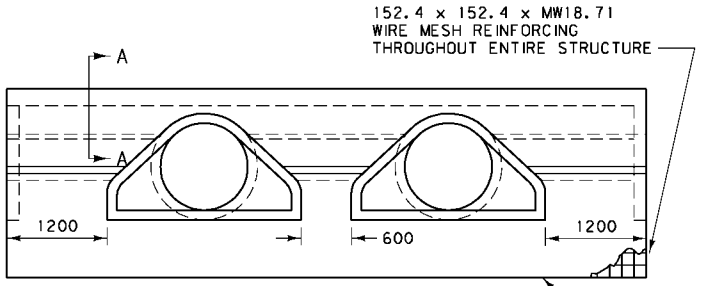

FRONT ELEVATION MULTIPLE PIPES

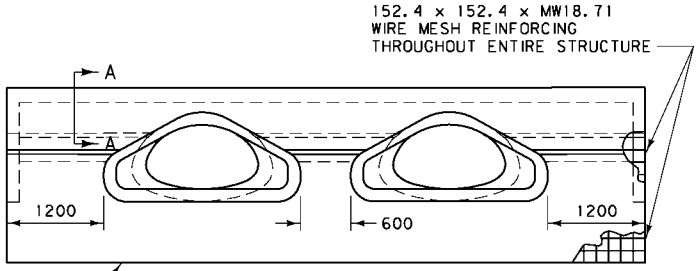

FRONT ELEVATION MULTIPLE PIPES

CUTOFF WALL INLET AND OUTLET END SEE DTL. DWG. NO. 552-00 (WHEN SPECIFIED IN PLANS)

ALL DIMENSIONS ARE MILLIMETERS (mm) UNLESS OTHERWISE NOTED.

NOTES:
ALL CONCRETE IS CLASS "DD" OR EQUAL.

DETAILED DRAWING	
REFERENCE STANDARD SPEC. SECTION 603, 613	DWG. NO. 613-08
CONCRETE EDGE PROTECTION FOR CONCRETE CULVERTS	
--REVISED-- January 2008	EFFECTIVE: FEBRUARY 2005
	MDT serving you with pride — MONTANA DEPARTMENT OF TRANSPORTATION

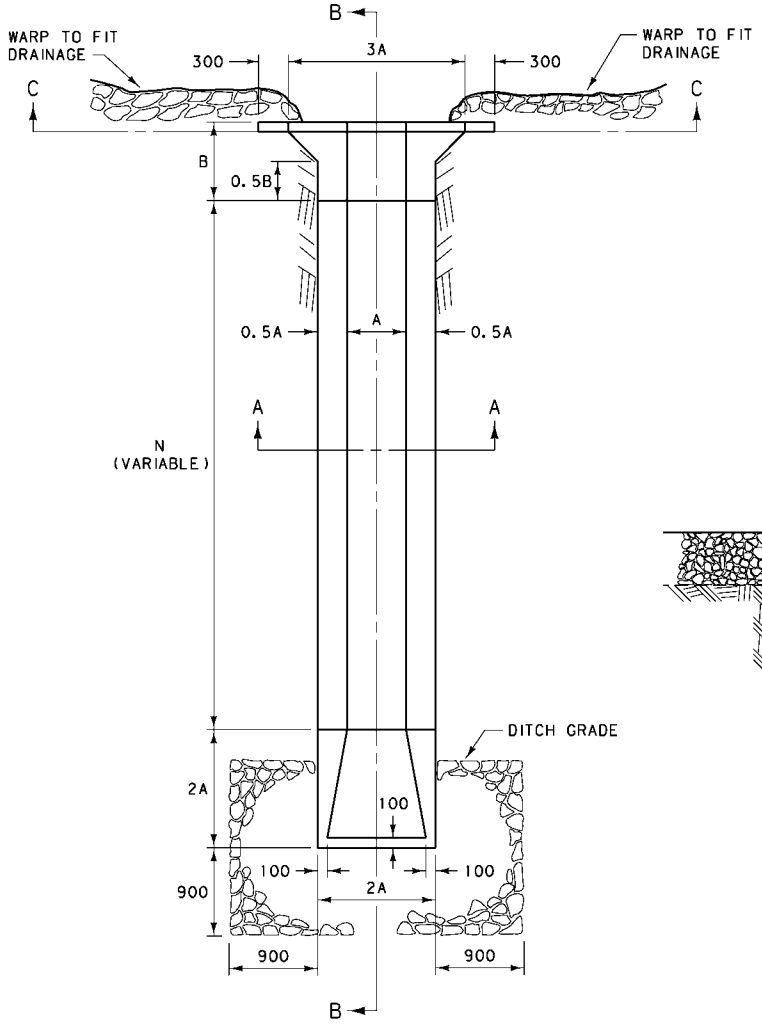

CONCRETE:

USE CLASS "AC" OR "DC" CONCRETE UNLESS OTHERWISE NOTED, CONFORMING TO SECTION 551 OF THE STANDARD SPECIFICATIONS. CONCRETE MAY BE PNEUMATICALLY APPLIED.

✱ BANK PROTECTION:

USE TYPE III BANK PROTECTION, CONFORMING TO SUBSECTION 613.03.2 OF THE STANDARD SPECIFICATIONS. THICKNESS IS 300 mm MIN.

INLET CONDITIONS:

DEPRESS THE INLET BELOW THE NATURAL DRAINAGE BASIN TO PREVENT FLOW FROM SIDE CHANNELING OVER THE SLOPE BEFORE REACHING THE CHUTE.

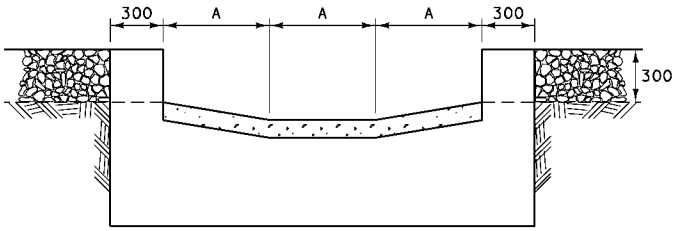

SECTION C-C

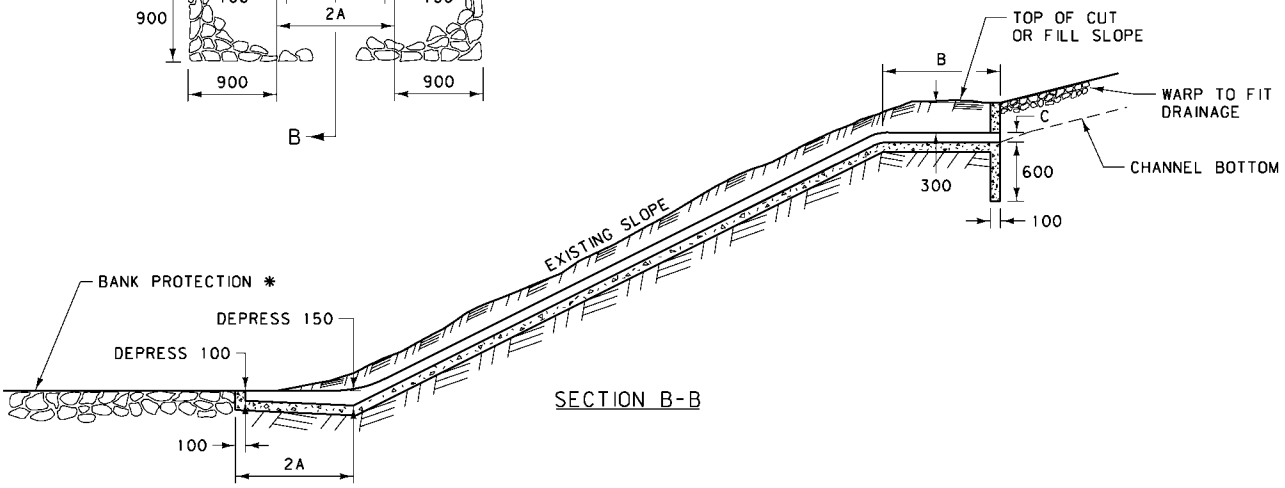

SECTION B-B

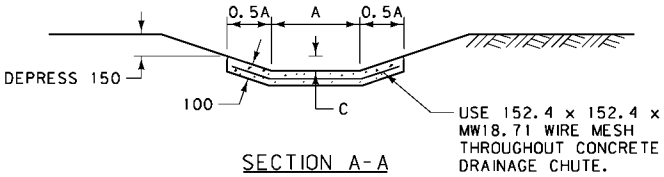

SECTION A-A

TYPE	DIMENSIONS			QUANTITIES
	A	B	C	CONCRETE
1	600	1200	100	0.49 m³ + N x 0.123 m³/m
2	600	1200	300	0.53 m³ + N x 0.143 m³/m
3	1200	2450	300	1.60 m³ + N x 0.254 m³/m
4	1200	2450	450	1.66 m³ + N x 0.269 m³/m

ALL DIMENSIONS ARE MILLIMETERS (mm) UNLESS OTHERWISE NOTED.

DETAILED DRAWING

REFERENCE STANDARD SPEC. SECTION 551, 613

DWG. NO. 613-18

CONCRETE DRAINAGE CHUTE

--REVISED--
January 2008

EFFECTIVE: FEBRUARY 2005

serving you with pride

MONTANA DEPARTMENT OF TRANSPORTATION

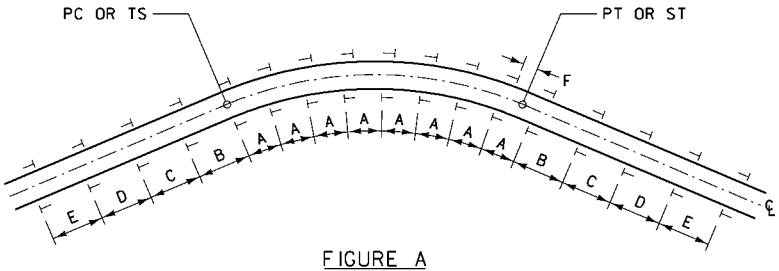

FIGURE A

SEE TABLE BELOW FOR SPACING VALUES

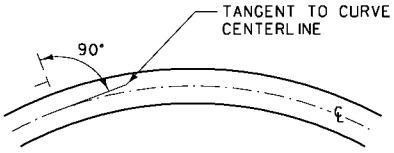

FIGURE B

HORIZONTAL CURVE SPACING TABLE					
RADIUS, m	SPACING ON CURVE, m	SPACING ON BOTH APPROACH TANGENTS, m			
	A	B	C	D	E
1750 & UP	90	120	120	120	120
900 - 1749	65	120	120	120	120
600 - 899	50	95	120	120	120
450 - 599	40	75	120	120	120
300 - 449	35	65	100	120	120
200 - 299	25	55	80	120	120
150 - 199	20	45	70	90	120
100 - 149	20	35	55	90	120
0 - 99	15	25	40	80	120

NOTES:

FURNISH RETRO-REFLECTIVE SHEETING ACCORDING TO THE STANDARD SPECIFICATIONS FOR RETRO-REFLECTIVE SHEETING B (HIGH INTENSITY). POSITION DELINEATOR FACES PERPENDICULAR TO THE TANGENT TO CURVE CENTERLINE AS SHOWN IN FIGURE B.

MOUNT DELINEATORS ON METAL U-POSTS (1.7 kg/m MIN. AND 3 kg/m MAX.) WITH 5 mm DIA. CADMIUM PLATED BOLT(S). DRILL OR PUNCH A MINIMUM OF TWELVE 9.5 mm MAXIMUM DIAMETER HOLES ON 25 mm CENTERS FROM THE TOP OF THE POST. 6.4 mm SQUARE HOLES MAY BE USED. IF SQUARE HOLES ARE USED, USE A LARGE HEADED BOLT OR AN APPROPRIATE WASHER. JAM THREADS AFTER TIGHTENING THE NUT TO PREVENT REMOVAL.

PLACE DELINEATORS AT A CONSTANT CLEARANCE DISTANCE FROM THE EDGE OF THE PAVEMENT EXCEPT WHERE GUARDRAIL OR OTHER OBSTRUCTIONS INTERFERE. ALIGN THE DELINEATORS WITH THE INSIDE EDGE OF THE OBSTRUCTION. CLEARANCE FOR DELINEATORS IS 1.8 m ON INTERSTATE HIGHWAYS, 0.6 m TO 1.8 m ON PRIMARY AND SECONDARY HIGHWAYS OR AS DETERMINED BY THE ENGINEER. THE STANDARD MOUNTING HEIGHT IS 1.2 m TO THE TOP OF THE POST. SUPPLY POST LENGTHS TO MAINTAIN THE PROPER MOUNTING HEIGHT AND A MINIMUM OF 0.45 m EMBEDMENT.

SPACE DELINEATORS ACCORDING TO THE DISTANCES FOUND IN THE TABLE ABOVE OR AS SPECIFIED IN THE PLANS. IN FIGURE A, IF "F" IS GREATER THAN 6 m ADD ONE REGULAR DELINEATOR IN AT "A" SPACING. UNDER NORMAL SPACING, SHOULD A DELINEATOR FALL WITHIN A CROSSROAD OR APPROACH, IT MAY BE MOVED IN EITHER DIRECTION A DISTANCE NOT TO EXCEED ONE QUARTER OF THE NORMAL SPACING. ELIMINATE DELINEATORS STILL FALLING IN SUCH AREAS.

ALL DELINEATOR REFLECTORS HAVE 18.75 mm CORNER RADII EXCEPT DESIGN "E".

MOUNT THE DELINEATOR REFLECTOR 25 mm BELOW THE TOP OF THE METAL U-POST.

WHEN THE ROADWAY ADT IS LESS THAN 900, DELINEATE ALL CURVES WITH 450 METER RADII OR LESS.

CONTINUOUSLY DELINEATE ROADWAYS WHEN THE ADT IS 900 AND GREATER, OR BY ENGINEERING JUDGEMENT.

ALL DIMENSIONS ARE MILLIMETERS (mm) UNLESS OTHERWISE NOTED.

DETAILED DRAWING

REFERENCE STANDARD SPEC. SECTION 619, 704

DWG. NO. 619-36

DELINEATOR PLACEMENT DETAILS

--REVISED--
January 2008

EFFECTIVE: APRIL 2006

serving you with pride

MONTANA DEPARTMENT OF TRANSPORTATION

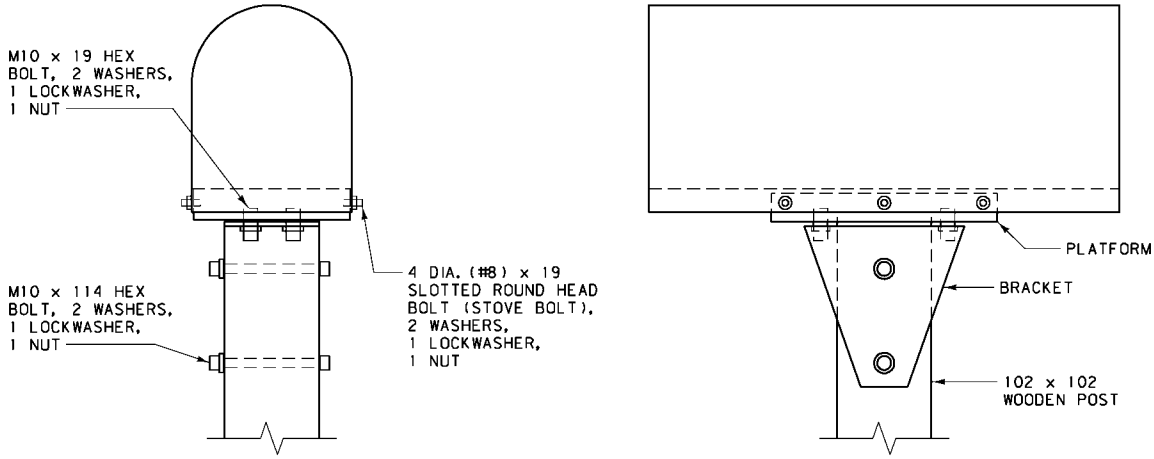

SINGLE MAILBOX ASSEMBLY *

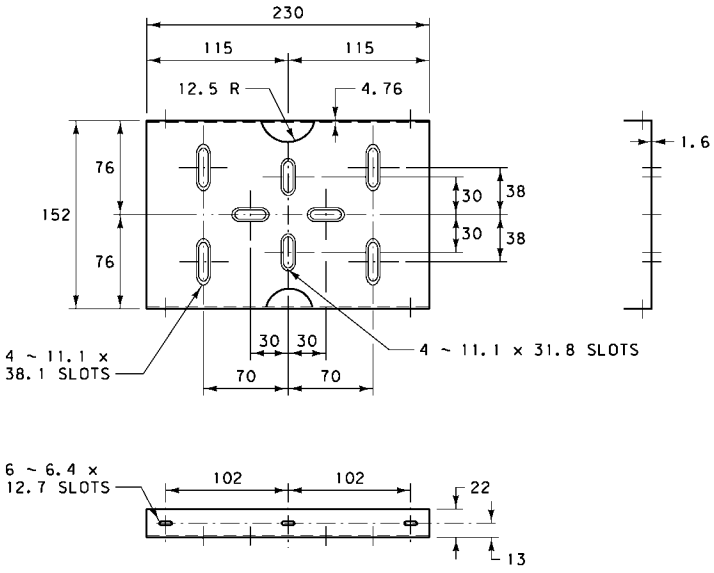

PLATFORM

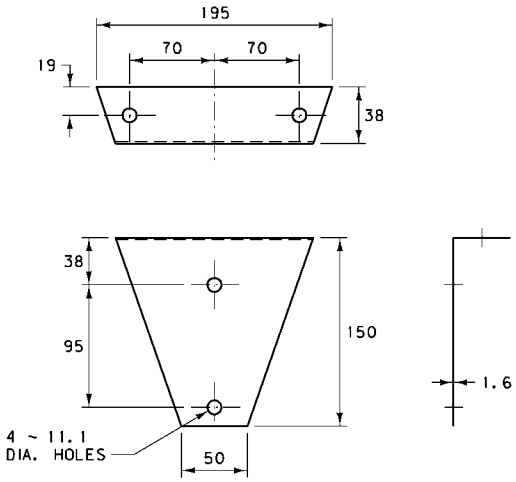

BRACKET

NOTES:

GALVANIZE ALL MATERIALS PER AASHTO M 111.

STAKE MAILBOX LOCATIONS BEFORE INSTALLATION FOR PROPER HEIGHT AND DISTANCE FROM THE ROADWAY. ONCE STAKED, NOTIFY THE ENGINEER AND THE POST OFFICE. THE ENGINEER AND POSTMASTER/MAILCARRIER ARE ALLOWED 48 HOURS TO REVIEW AND MODIFY THE STAKED LOCATIONS PRIOR TO FINAL INSTALLATION.

* OTHER CRASH TESTED MAILBOX SUPPORTS AND ASSEMBLIES MAY ALSO BE USED.

LOCATE THE MAILBOX 0.2 TO 0.3 METERS OUTSIDE THE EDGE OF THE SHOULDER OR 0.15 TO 0.3 METERS FROM THE FACE OF CURB.

FOR MULTIPLE MAILBOX INSTALLATIONS, SPACE THE MAILBOX SUPPORTS A MINIMUM DISTANCE OF 1.05 METERS APART.

USE MAILBOXES MEETING THE REQUIREMENTS OF THE STANDARD SPECIFICATIONS.

SEE "A GUIDE TO MAILBOX SAFETY IN MONTANA", 1996 EDITION, FOR ADDITIONAL INFORMATION.

ALL DIMENSIONS ARE MILLIMETERS (mm) UNLESS OTHERWISE NOTED.

DETAILED DRAWING	
REFERENCE STANDARD SPEC. SECTION	DWG. NO. 900-05
MAILBOX DETAIL	
--REVISED-- January 2008	EFFECTIVE: FEBRUARY 2005
	serving you with pride — MONTANA DEPARTMENT OF TRANSPORTATION