DETAIL

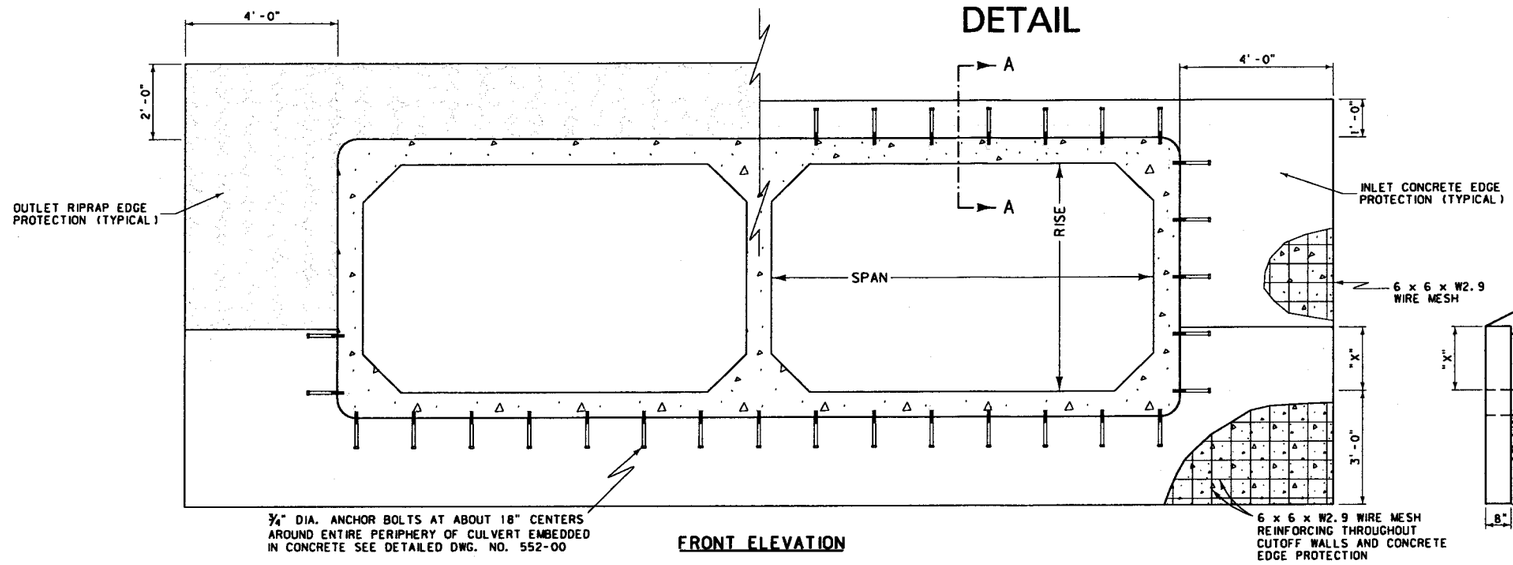

FRONT ELEVATION

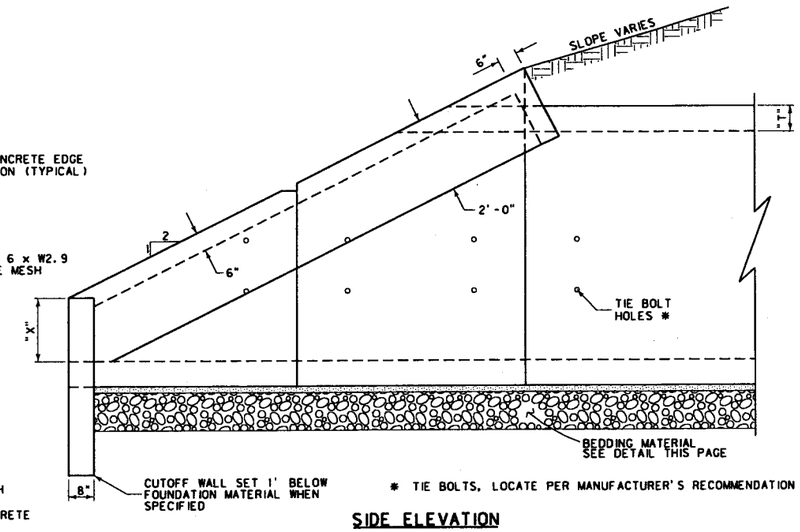

SIDE ELEVATION

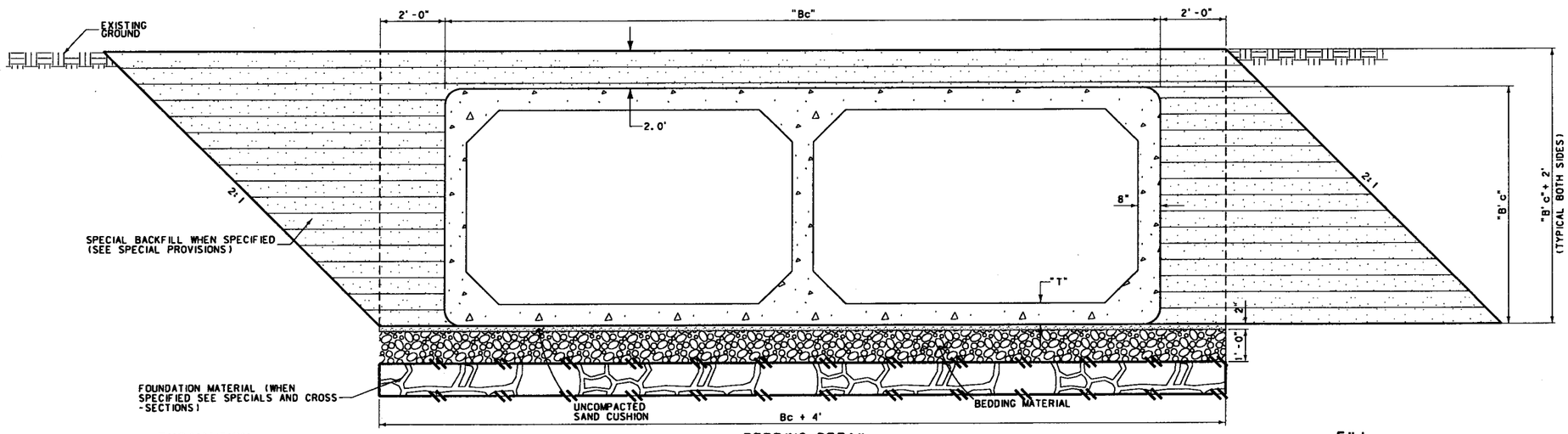

EXCAVATION TYPICAL

BEDDING DETAIL

FILL TYPICAL

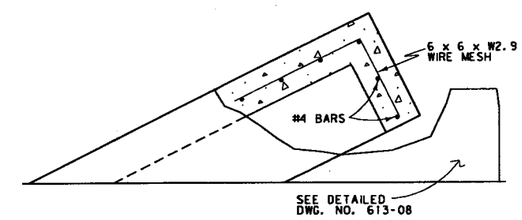

SECTION A-A

NOTE: SPECIAL BACKFILL SHALL BE PLACED 2' OVER PIPE UNLESS THE FILL REQUIREMENTS CANNOT BE MET.

COMPACT SOIL MATERIAL IN LAYERS NOT MORE THAN 6" THICK FOR THE REMAINDER OF THE LOWER 30% OF ITS HEIGHT. BACKFILL IN CONFORMANCE TO THE TOP OF THE CULVERT WITH THE APPLICABLE PROVISIONS OF THE STANDARD SPECIFICATIONS.

HANDLE BOX CULVERT SECTIONS AND END SECTIONS IN ACCORDANCE WITH THE MANUFACTURER'S RECOMMENDATIONS. IMPROPER HANDLING MAY DAMAGE THE BOX CULVERT OR END SECTION. REPAIR OR REPLACE DAMAGED SECTIONS AT CONTRACTOR EXPENSE PER 2006 MDT STANDARD SPECIFICATIONS SECTION 603.03.1.

NOTE: EXCAVATE A SUFFICIENT AMOUNT TO PROVIDE A SAFE WORKING ENVIRONMENT AND TO ALLOW ACHIEVEMENT OF ALL CULVERT INSTALLATION AND COMPACTION REQUIREMENTS. SLOPE, BENCH OR PROVIDE SHORING FOR ALL EXCAVATIONS IN ACCORDANCE WITH THE U.S. DEPARTMENT OF LABOR, OCCUPATIONAL SAFETY AND HEALTH ADMINISTRATION (OSHA) SAFETY AND HEALTH REGULATIONS FOR CONSTRUCTION. SPECIAL BACKFILL QUANTITY IS BASED ON 2:1 SLOPES.

DIMENSIONS												
STATION	SPAN (ft.)	RISE (ft.)	LENGTH (ft.)	"T" (in.)	"Bc" (ft.)	"x" (ft.)	"B'c" (ft.)	① CLASS "DD" CONCRETE (cu.yd.)	② BEDDING MATERIAL (cu.yd.)	SPECIAL BACKFILL (cu.yd.)	RIPRAP CLASS (cu.yd.) OUTLET	COVER (ft.)

① INCLUDES CUTOFF WALLS FOR BOTH INLET AND OUTLET ENDS AND EDGE PROTECTION FOR INLET ONLY.

② INCLUDES 2" UNCOMPACTED SAND CUSHION.

NOTE: INCLUDE REINFORCING MATERIAL IN THE UNIT PRICE BID PER CUBIC YARD OF CONCRETE.
INCLUDE ANCHOR BOLTS IN THE UNIT PRICE BID PER LINEAR FOOT OF CULVERT.
PROVIDE BOXES MEETING AASHTO 273 IN LOCATIONS WITH 2' OF COVER OR LESS.
PROVIDE BOXES MEETING AASHTO 259 IN LOCATIONS WITH MORE THAN 2' OF COVER. (SEE SPECIAL PROVISIONS)
QUANTITIES ARE BASED ON THE DIMENSIONS IN THE TABLE.

DETAIL

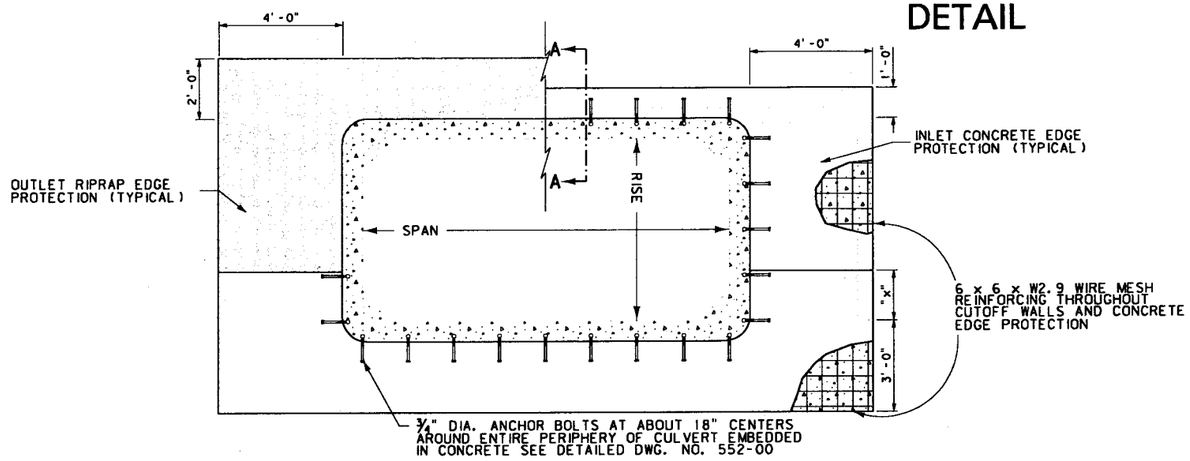

FRONT ELEVATION

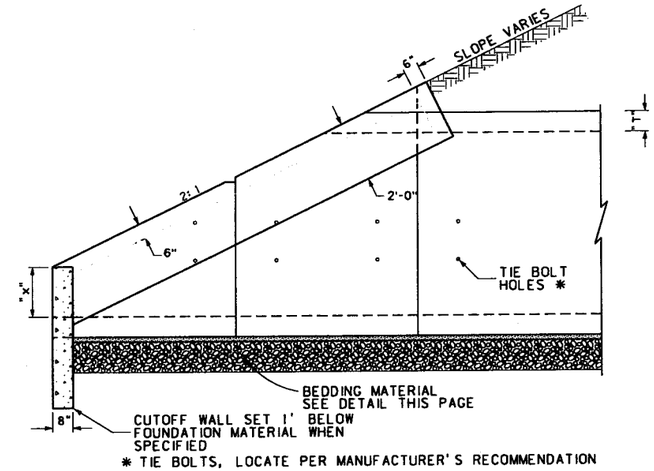

SIDE ELEVATION

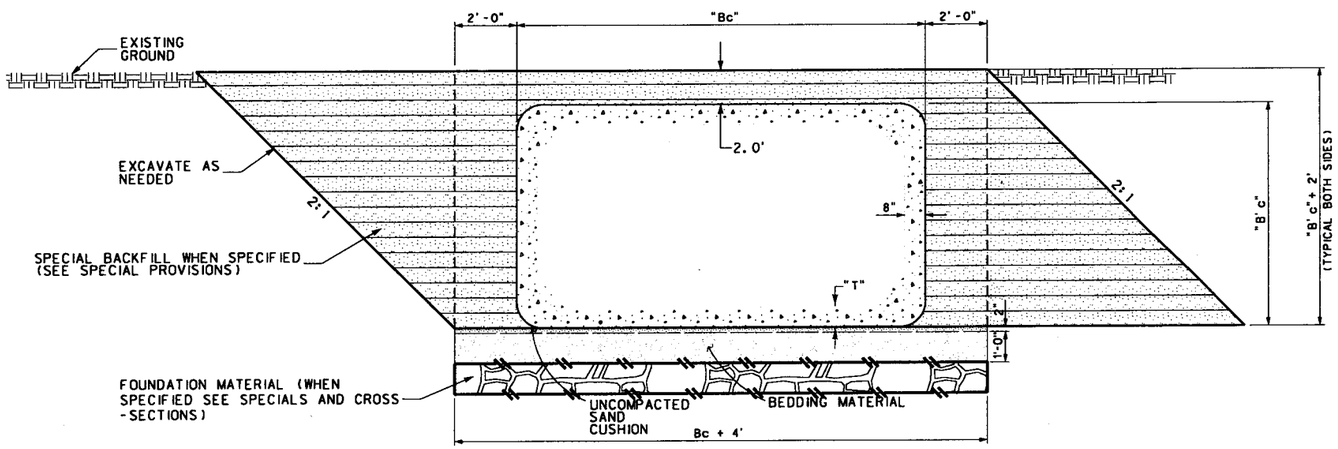

EXCAVATION TYPICAL

BEDDING DETAIL

FILL TYPICAL

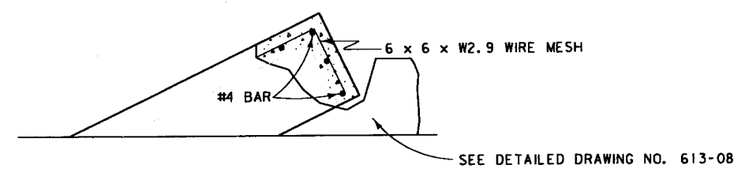

SECTION A-A

NOTE: SPECIAL BACKFILL SHALL BE PLACED 2' OVER PIPE UNLESS THE FILL REQUIREMENTS CANNOT BE MET.

NOTE: COMPACT SOIL MATERIAL IN LAYERS NOT MORE THAN 6" THICK FOR THE REMAINDER OF THE LOWER 30% OF ITS HEIGHT. BACKFILL IN CONFORMANCE TO SUBGRADE WITH THE APPLICABLE PROVISIONS OF THE STANDARD SPECIFICATIONS.

NOTE: HANDLE BOX CULVERT SECTIONS AND END SECTIONS IN ACCORDANCE WITH THE MANUFACTURER'S RECOMMENDATIONS. IMPROPER HANDLING MAY DAMAGE THE BOX CULVERT OR END SECTION. REPAIR OR REPLACE DAMAGED SECTIONS AT CONTRACTOR EXPENSE PER 2006 MDT STANDARD SPECIFICATIONS SECTION 603.03.1.

NOTE: EXCAVATE A SUFFICIENT AMOUNT TO PROVIDE A SAFE WORKING ENVIROMENT AND TO ALLOW ACHIEVEMENT OF ALL CULVERT INSTALLATION AND COMPACTION REQUIREMENTS. SLOPE, BENCH OR PROVIDE SHORING FOR ALL EXCAVATIONS IN ACCORDANCE WITH THE U.S. DEPARTMENT OF LABOR, OCCUPATIONAL SAFETY AND HEALTH ADMINISTRATION (OSHA) SAFETY AND HEALTH REGULATIONS FOR CONSTRUCTION. SPECIAL BACKFILL QUANTITY IS BASED ON 2:1 SLOPES.

DIMENSIONS												
STATION	SPAN (ft.)	RISE (ft.)	LENGTH (ft.)	"T" (in.)	"Bc" (ft.)	"x" (ft.)	"B'c" (ft.)	① CLASS "DD" CONCRETE (cu.yd.)	② BEDDING MATERIAL (cu.yd.)	SPECIAL BACKFILL (cu.yd.)	RIPRAP CLASS (cu.yd.) OUTLET	COVER (ft.)

① INCLUDES CUTOFF WALLS FOR BOTH INLET AND OUTLET ENDS AND EDGE PROTECTION FOR INLET ONLY.

② INCLUDES 2" UNCOMPACTED SAND CUSHION.

NOTE: INCLUDE REINFORCING MATERIAL IN THE UNIT PRICE BID PER CUBIC YARD OF CONCRETE.
INCLUDE ANCHOR BOLTS IN THE UNIT PRICE BID PER LINEAR FOOT OF CULVERT.
PROVIDE BOXES MEETING AASHTO 273 IN LOCATIONS WITH 2' OF COVER OR LESS.
PROVIDE BOXES MEETING AASHTO 259 IN LOCATIONS WITH MORE THAN 2' OF COVER. (SEE SPECIAL PROVISIONS)
QUANTITIES ARE BASED ON THE DIMENSIONS IN THE TABLE.

DETAIL

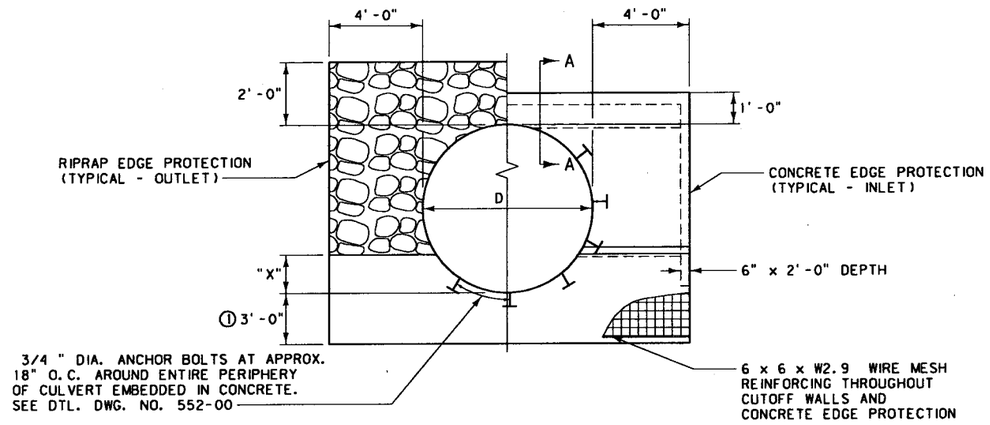

FRONT ELEVATION

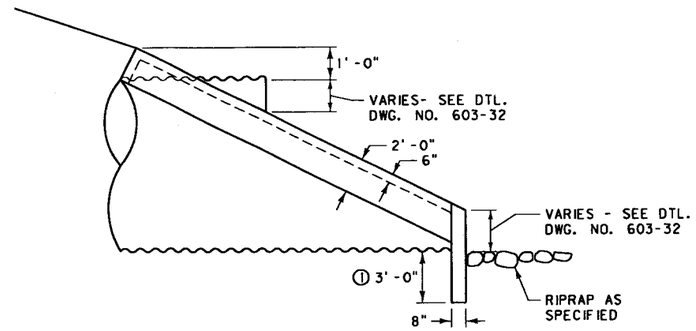

SIDE ELEVATION

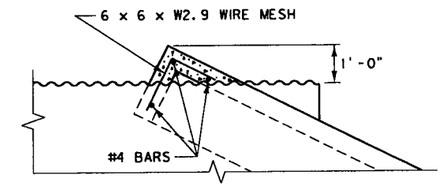

SECTION A-A

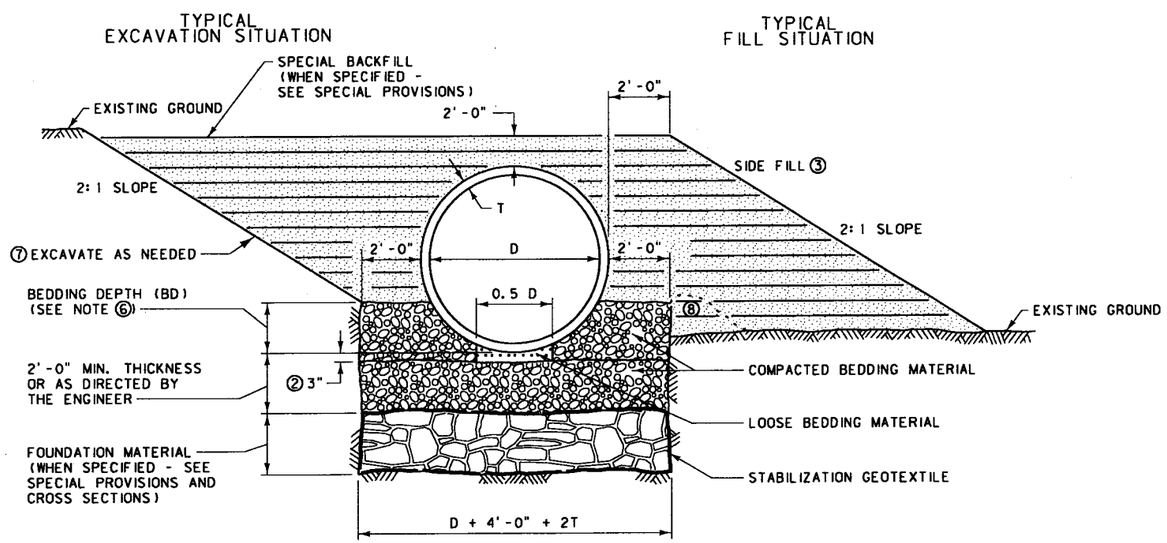

BEDDING DETAILS (CUTOFF WALLS AND EDGE PROT. OMITTED FOR CLARITY)

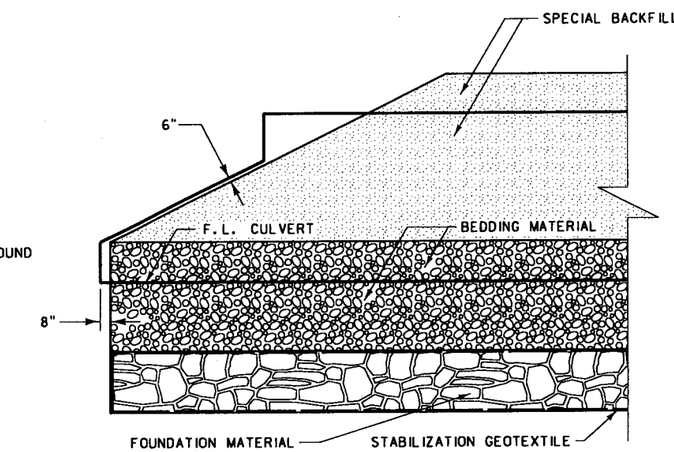

PIPE END DETAIL

NOTES:

① WHEN FOUNDATION MATERIAL IS SPECIFIED, SET CUTOFF WALL 1 FOOT BELOW BOTTOM OF FOUNDATION MATERIAL.

② PLACE LOOSE BEDDING MATERIAL UNIFORMLY IN THE BOTTOM OF THE TRENCH AND SHAPE TO FIT BOTTOM OF PIPE. THE MINIMUM THICKNESS BEFORE PLACING PIPE IS 3". AFTER LAYING CULVERT, COMPACT BEDDING MATERIAL AT HAUNCHES AND SIDES OF PIPE.

③ COMPACT SIDE FILL IN 6" LOOSE LAYERS TO DENSITY SPECIFIED FOR ADJACENT EMBANKMENT. SEE SECTION 203.03.3 OF THE STANDARD SPECIFICATIONS FOR THE DENSITY REQUIREMENTS.

④ SEE SECTION 701.04 OF THE STANDARD SPECIFICATIONS FOR BEDDING AND FOUNDATION MATERIAL REQUIREMENTS.

⑤ DIMENSION D IS THE INSIDE PIPE DIAMETER. DIMENSION T IS THE CORRUGATION WIDTH FOR METAL PIPE.

⑥ THE BEDDING DEPTH FOR METAL PIPE IS "X" + T. SEE DTL. DWG. NO. 603-32 AND 603-34 FOR "X" DIMENSIONS OF METAL PIPES.

⑦ EXCAVATE A SUFFICIENT AMOUNT TO PROVIDE A SAFE WORKING ENVIRONMENT AND TO ALLOW ACHIEVEMENT OF ALL CULVERT INSTALLATION AND COMPACTION REQUIREMENTS. SLOPE, BENCH OR PROVIDE SHORING FOR ALL EXCAVATIONS IN ACCORDANCE WITH THE U.S. DEPARTMENT OF LABOR, OCCUPATIONAL SAFETY AND HEALTH ADMINISTRATION (OSHA) SAFETY AND HEALTH REGULATIONS FOR CONSTRUCTION. SPECIAL BACKFILL QUANTITY IS BASED ON 2: 1 SLOPES.

⑧ BUILD BERM AS NEEDED TO CONTAIN THE BEDDING MATERIAL TO THE PROPER DEPTH.

DIMENSIONS

STATION	DIAMETER (FT.)	LENGTH (FT.)	"T" (IN.)	"X" (FT.)	"BD" (FT.)	Ⓐ CLASS "DD" CONCRETE (CU. YD.)	Ⓑ BEDDING MATERIAL (CU. YD.)	SPECIAL BACKFILL (CU. YD.)	RIPRAP CLASS ____ (CU. YD.) OUTLET	COVER (FT.)

Ⓐ INCLUDES CUTOFF WALLS FOR BOTH INLET AND OUTLET ENDS AND EDGE PROTECTION FOR INLET ONLY.

Ⓑ INCLUDES 3" LOOSE BEDDING MATERIAL.

NOTE: INCLUDE REINFORCING MATERIAL IN THE UNIT PRICE BID PER CUBIC YARD OF CONCRETE.
INCLUDE ANCHOR BOLTS IN THE UNIT PRICE BID PER LINEAR FOOT OF CULVERT.
QUANTITIES ARE BASED ON THE DIMENSIONS IN THE TABLE.

NO SCALE

DETAIL
BEDDING FOR
STRUCTURAL STEEL
PLATE PIPE CULVERT

DETAIL

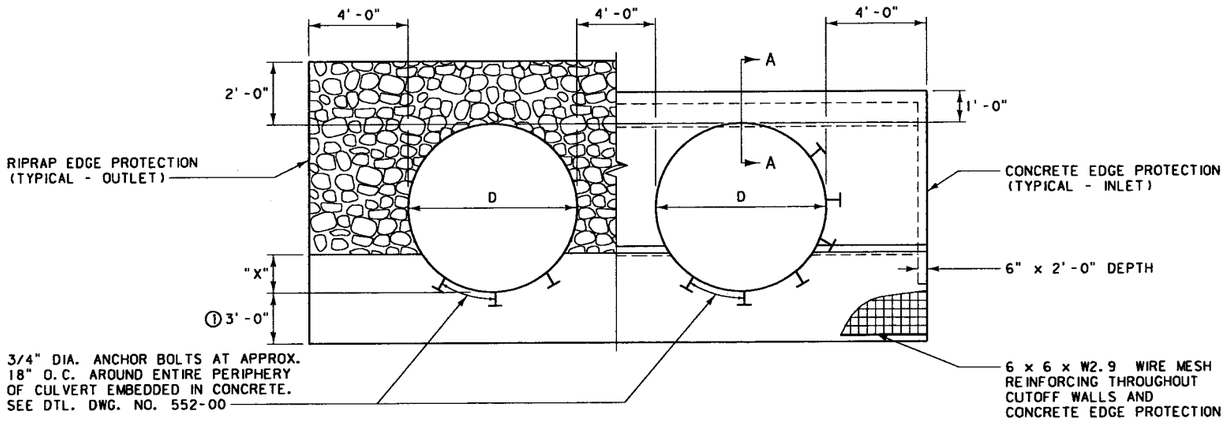

FRONT ELEVATION

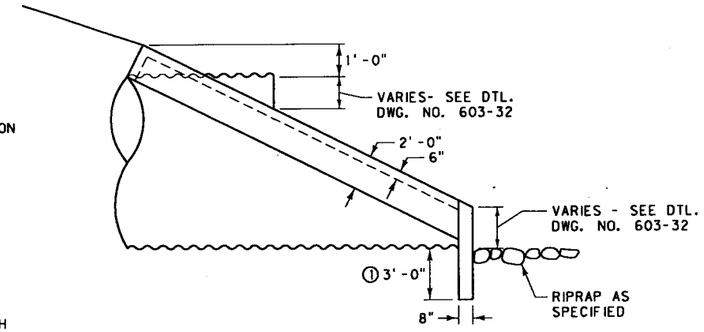

SIDE ELEVATION

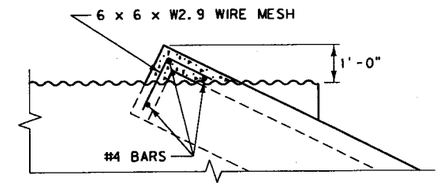

SECTION A-A

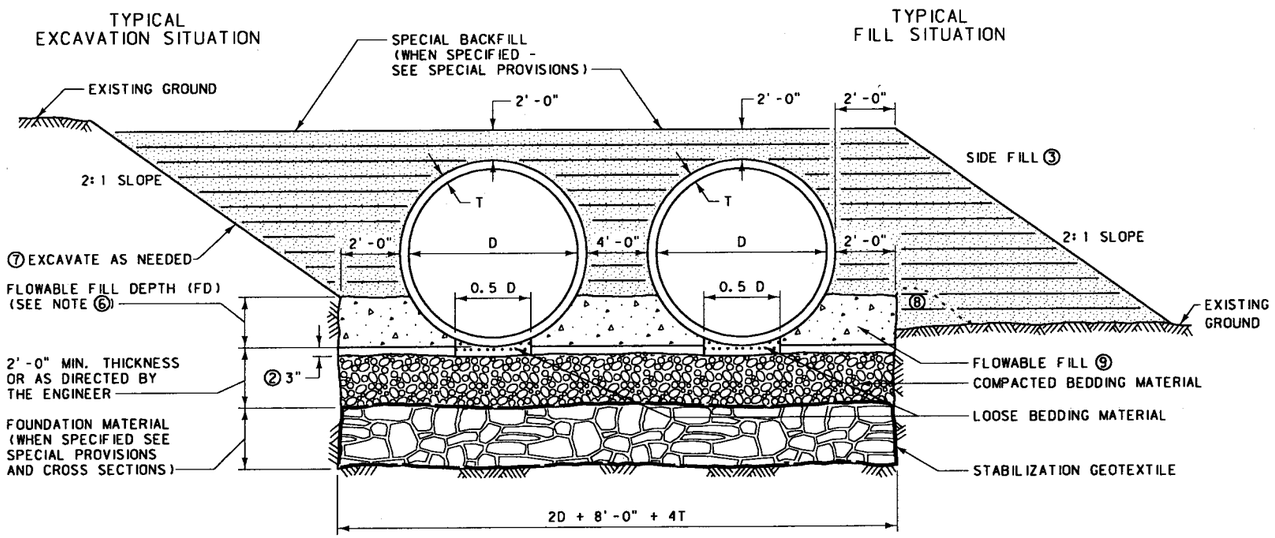

BEDDING DETAILS (CUTOFF WALLS AND EDGE PROT. OMITTED FOR CLARITY)

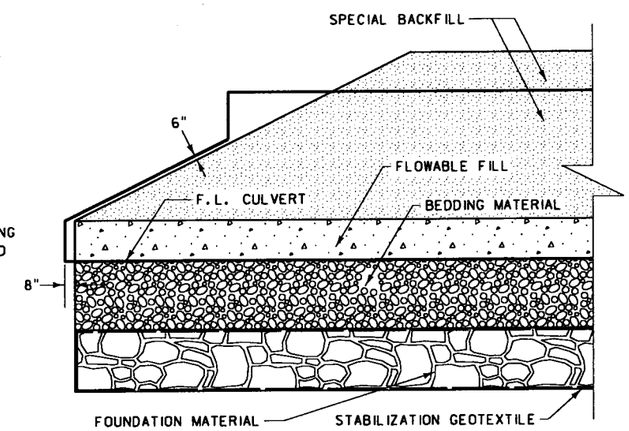

PIPE END DETAIL

NOTES:

① WHEN FOUNDATION MATERIAL IS SPECIFIED, SET CUTOFF WALL 1 FOOT BELOW BOTTOM OF FOUNDATION MATERIAL

② PLACE LOOSE BEDDING MATERIAL UNIFORMLY IN THE BOTTOM OF THE TRENCH AND SHAPE TO FIT BOTTOM OF PIPE. THE MINIMUM THICKNESS BEFORE PLACING PIPE IS 3". AFTER LAYING CULVERT, COMPACT BEDDING MATERIAL AT HAUNCHES AND SIDES OF PIPE.

③ COMPACT SIDE FILL IN 6" LOOSE LAYERS TO DENSITY SPECIFIED FOR ADJACENT EMBANKMENT. SEE SECTION 203.03.3 OF THE STANDARD SPECIFICATIONS FOR THE DENSITY REQUIREMENTS.

④ SEE SECTION 701.04 OF THE STANDARD SPECIFICATIONS FOR BEDDING AND FOUNDATION MATERIAL REQUIREMENTS.

⑤ DIMENSION D IS THE INSIDE PIPE DIAMETER. DIMENSION T IS THE CORRUGATION WIDTH FOR METAL PIPE.

⑥ THE FLOWABLE FILL DEPTH FOR METAL PIPE IS "X" + T. SEE DTL. DWG. NO. 603-32 AND 603-34 FOR "X" DIMENSIONS OF METAL PIPES.

⑦ EXCAVATE A SUFFICIENT AMOUNT TO PROVIDE A SAFE WORKING ENVIRONMENT AND TO ALLOW ACHIEVEMENT OF ALL CULVERT INSTALLATION AND COMPACTION REQUIREMENTS. SLOPE, BENCH OR PROVIDE SHORING FOR ALL EXCAVATIONS IN ACCORDANCE WITH THE U.S. DEPARTMENT OF LABOR, OCCUPATIONAL SAFETY AND HEALTH ADMINISTRATION (OSHA) SAFETY AND HEALTH REGULATIONS FOR CONSTRUCTION. SPECIAL BACKFILL QUANTITY BASED ON 2:1 SLOPES.

⑧ BUILD BERM AS NEEDED TO CONTAIN THE FLOWABLE FILL TO THE PROPER DEPTH.

⑨ PLACE EXCAVATABLE FLOWABLE FILL MEETING THE REQUIREMENTS OF SECTION 551 OF THE STANDARD SPECIFICATIONS.

NO SCALE

DIMENSIONS

STATION	DIAMETER (FT.)	LENGTH (FT.)	"T" (IN.)	"X" (FT.)	"FD" (FT.)	Ⓐ CLASS "DD" CONCRETE (CU. YD.)	Ⓑ BEDDING MATERIAL (CU. YD.)	SPECIAL BACKFILL (CU. YD.)	FLOWABLE FILL (CU. YD.)	RIPRAP CLASS ____ (CU. YD.) OUTLET	COVER (FT.)

Ⓐ INCLUDES CUTOFF WALLS FOR BOTH INLET AND OUTLET ENDS AND EDGE PROTECTION FOR INLET ONLY.

Ⓑ INCLUDES 3" LOOSE BEDDING MATERIAL.

NOTE: INCLUDE REINFORCING MATERIAL IN THE UNIT PRICE BID PER CUBIC YARD OF CONCRETE.
INCLUDE ANCHOR BOLTS IN THE UNIT PRICE BID PER LINEAR FOOT OF CULVERT.
QUANTITIES ARE BASED ON THE DIMENSIONS IN THE TABLE.

DETAIL
BEDDING FOR DOUBLE
STRUCTURAL STEEL PLATE
PIPE CULVERTS

DETAIL

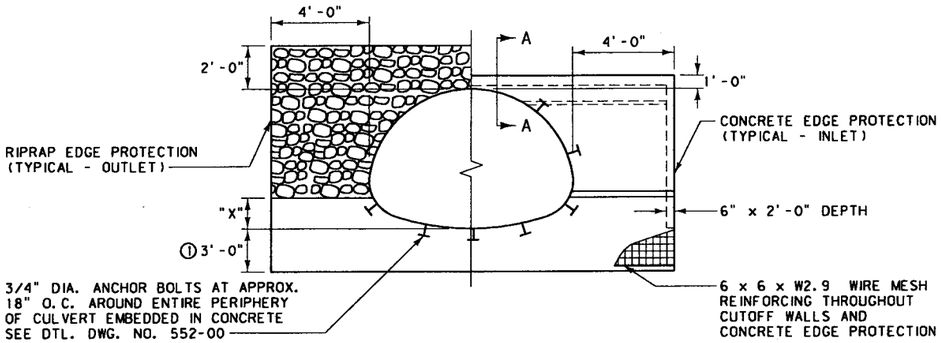

FRONT ELEVATION

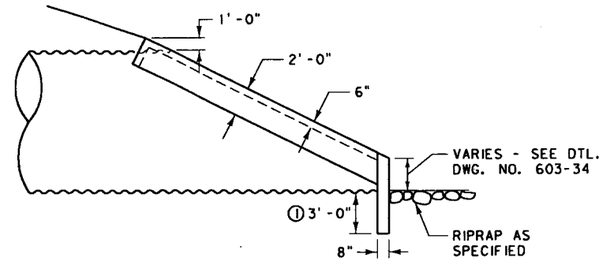

SIDE ELEVATION

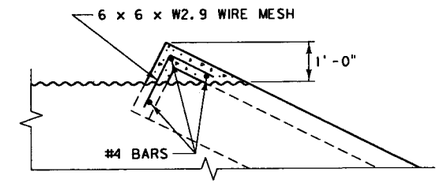

SECTION A-A

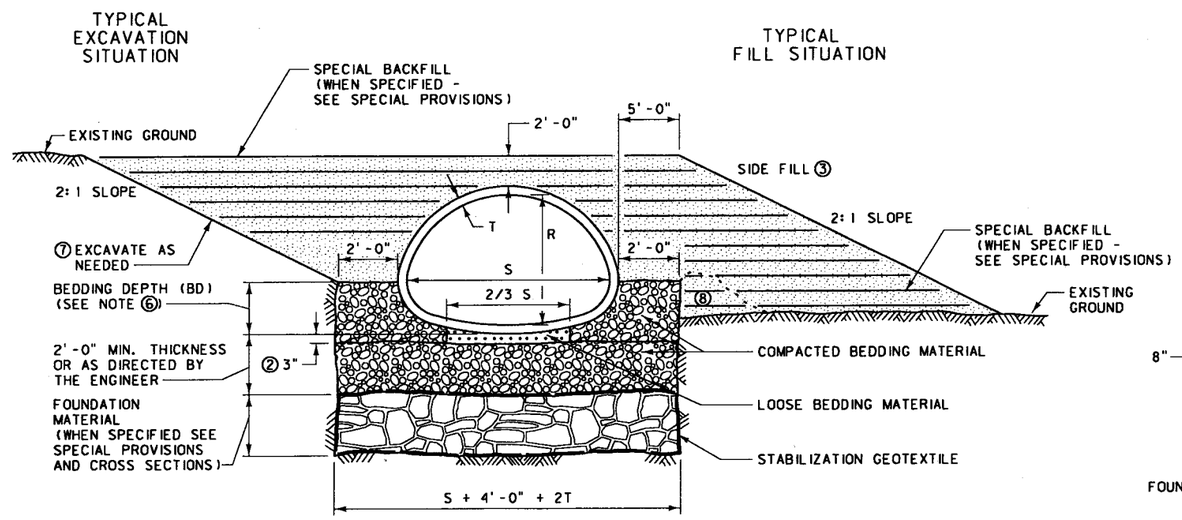

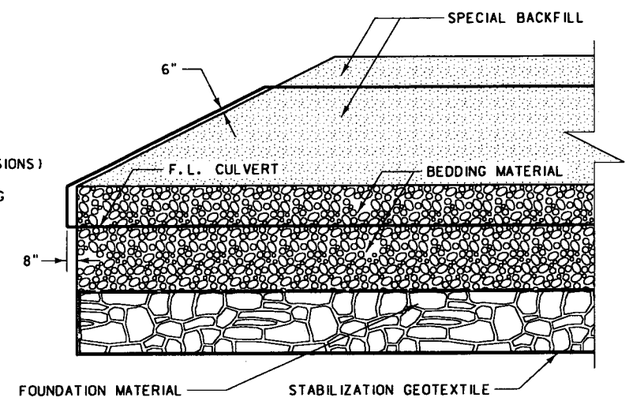

PIPE END DETAIL

NOTES:

① WHEN FOUNDATION MATERIAL IS SPECIFIED, SET CUTOFF WALL 1 FOOT BELOW BOTTOM OF FOUNDATION MATERIAL.

② PLACE LOOSE BEDDING MATERIAL UNIFORMLY IN THE BOTTOM OF THE TRENCH AND SHAPE TO FIT BOTTOM OF PIPE. THE MINIMUM THICKNESS BEFORE PLACING PIPE IS 3". AFTER LAYING CULVERT, COMPACT BEDDING MATERIAL AT HAUNCHES AND SIDES OF PIPE.

③ COMPACT SIDE FILL IN 6" LOOSE LAYERS TO DENSITY SPECIFIED FOR ADJACENT EMBANKMENT. SEE SECTION 203.03.3 OF THE STANDARD SPECIFICATIONS FOR THE DENSITY REQUIREMENTS.

④ SEE SECTION 701.04 OF THE STANDARD SPECIFICATIONS FOR BEDDING AND FOUNDATION MATERIAL REQUIREMENTS.

⑤ DIMENSIONS S AND R ARE THE SPAN AND RISE. DIMENSION T IS THE CORRUGATION WIDTH FOR METAL PIPE.

⑥ THE BEDDING DEPTH FOR METAL PIPE IS "X" + T. SEE DTL. DWG. NO. 603-32 AND 603-34 FOR "X" DIMENSIONS OF METAL PIPES.

⑦ EXCAVATE A SUFFICIENT AMOUNT TO PROVIDE A SAFE WORKING ENVIRONMENT AND TO ALLOW ACHIEVEMENT OF ALL CULVERT INSTALLATION AND COMPACTION REQUIREMENTS. SLOPE, BENCH OR PROVIDE SHORING FOR ALL EXCAVATIONS IN ACCORDANCE WITH THE U.S. DEPARTMENT OF LABOR, OCCUPATIONAL SAFETY AND HEALTH ADMINISTRATION (OSHA) SAFETY AND HEALTH REGULATIONS FOR CONSTRUCTION. SPECIAL BACKFILL QUANTITY IS BASED ON 2:1 SLOPES.

⑧ BUILD BERM AS NEEDED TO CONTAIN THE BEDDING MATERIAL TO THE PROPER DEPTH.

BEDDING DETAILS (CUTOFF WALLS AND EDGE PROT. OMITTED FOR CLARITY)

DIMENSIONS

STATION	SPAN (FT.)	RISE (FT.)	LENGTH (FT.)	"T" (IN.)	"X" (FT.)	"BD" (FT.)	Ⓐ CLASS "DD" CONCRETE (CU. YD.)	Ⓑ BEDDING MATERIAL (CU. YD.)	SPECIAL BACKFILL (CU. YD.)	RIPRAP CLASS ____ (CU. YD.) OUTLET	COVER (FT.)

Ⓐ INCLUDES CUTOFF WALLS FOR BOTH INLET AND OUTLET ENDS AND EDGE PROTECTION FOR INLET ONLY.

Ⓑ INCLUDES 3" LOOSE BEDDING MATERIAL.

NOTE: INCLUDE REINFORCING MATERIAL IN THE UNIT PRICE BID PER CUBIC YARD OF CONCRETE.
INCLUDE ANCHOR BOLTS IN THE UNIT PRICE BID PER LINEAR FOOT OF CULVERT.
QUANTITIES ARE BASED ON THE DIMENSIONS IN THE TABLE.

NO SCALE

DETAIL
BEDDING FOR
STRUCTURAL STEEL
PLATE PIPE
ARCH CULVERT

DETAIL

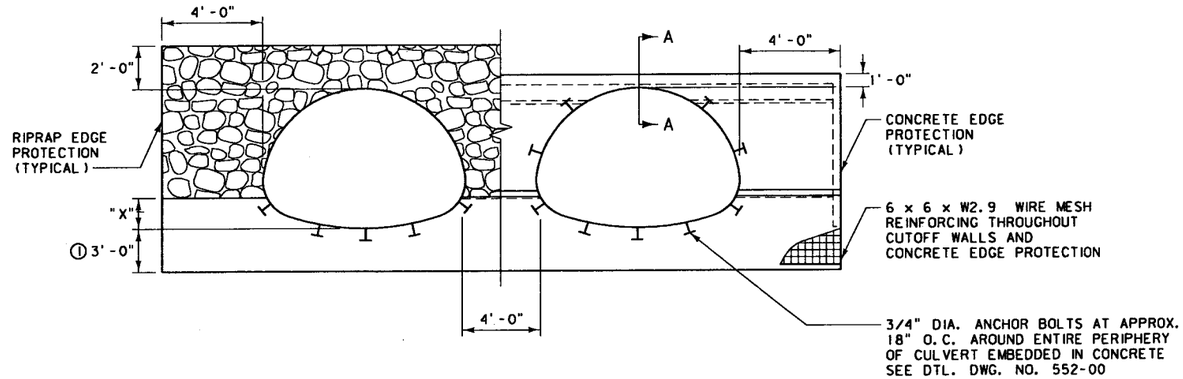

FRONT ELEVATION

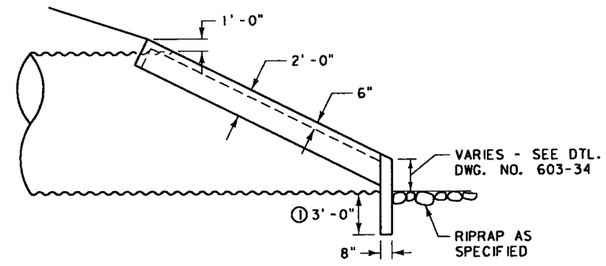

SIDE ELEVATION

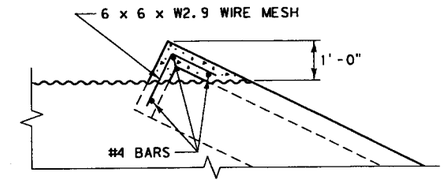

SECTION A-A

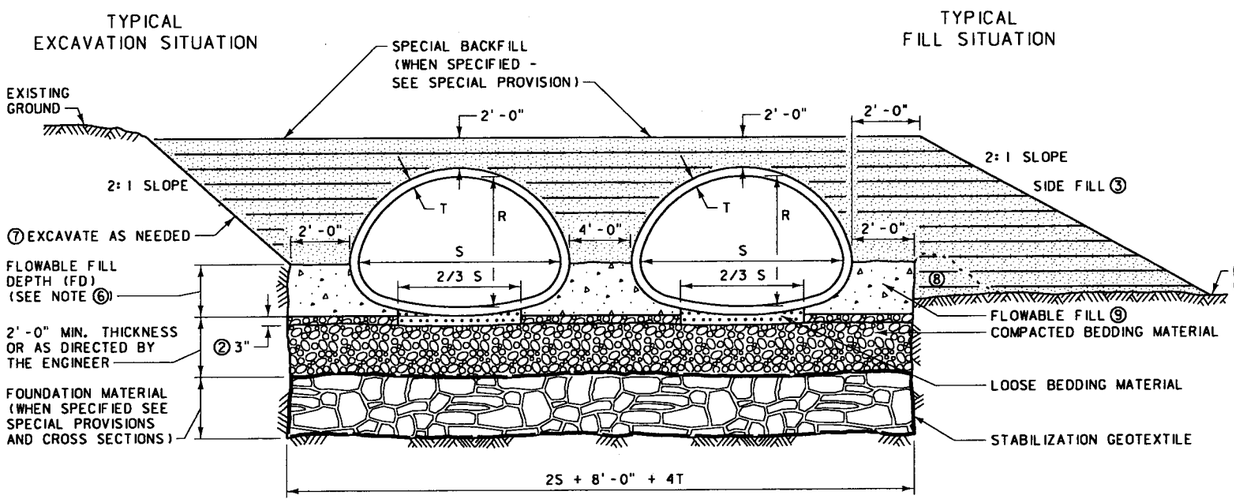

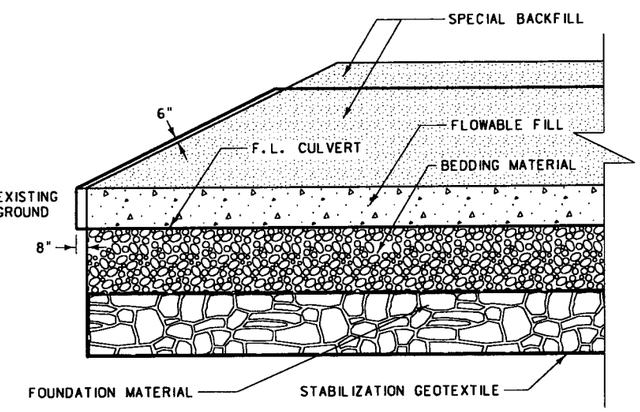

PIPE END DETAIL

NOTES:

① WHEN FOUNDATION MATERIAL IS SPECIFIED, SET CUTOFF WALL 1 FOOT BELOW BOTTOM OF FOUNDATION MATERIAL

② PLACE LOOSE BEDDING MATERIAL UNIFORMLY IN THE BOTTOM OF THE TRENCH AND SHAPE TO FIT BOTTOM OF PIPE. THE MINIMUM THICKNESS BEFORE PLACING PIPE IS 3". AFTER LAYING CULVERT, COMPACT BEDDING MATERIAL AT HAUNCHES AND SIDES OF PIPE.

③ COMPACT SIDE FILL IN 6" LOOSE LAYERS TO DENSITY SPECIFIED FOR ADJACENT EMBANKMENT. SEE SECTION 203.03.3 OF THE STANDARD SPECIFICATIONS FOR THE DENSITY REQUIREMENTS.

④ SEE SECTION 701.04 OF THE STANDARD SPECIFICATIONS FOR BEDDING AND FOUNDATION MATERIAL REQUIREMENTS.

⑤ DIMENSIONS S AND R ARE THE SPAN AND RISE. DIMENSION T IS THE CORRUGATION WIDTH FOR METAL PIPE.

⑥ THE FLOWABLE FILL DEPTH FOR METAL PIPE IS "X" + T. SEE DTL. DWG. NO. 603-32 AND 603-34 FOR "X" DIMENSIONS OF METAL PIPES.

⑦ EXCAVATE A SUFFICIENT AMOUNT TO PROVIDE A SAFE WORKING ENVIRONMENT AND TO ALLOW ACHIEVEMENT OF ALL CULVERT INSTALLATION AND COMPACTION REQUIREMENTS. SLOPE, BENCH OR PROVIDE SHORING FOR ALL EXCAVATIONS IN ACCORDANCE WITH THE U.S. DEPARTMENT OF LABOR, OCCUPATIONAL SAFETY AND HEALTH ADMINISTRATION (OSHA) SAFETY AND HEALTH REGULATIONS FOR CONSTRUCTION. SPECIAL BACKFILL QUANTITY BASED ON 2: 1 SLOPES.

⑧ BUILD BERM AS NEEDED TO CONTAIN THE FLOWABLE FILL TO THE PROPER DEPTH.

⑨ PLACE EXCAVATABLE FLOWABLE FILL MEETING THE REQUIREMENTS OF SECTION 551 OF THE STANDARD SPECIFICATIONS.

BEDDING DETAILS (CUTOFF WALLS AND EDGE PROT. OMITTED FOR CLARITY)

DIMENSIONS

STATION	SPAN (FT.)	RISE (FT.)	LENGTH (FT.)	"T" (IN.)	"X" (FT.)	"FD" (FT.)	Ⓐ CLASS "DD" CONCRETE (CU. YD.)	Ⓑ BEDDING MATERIAL (CU. YD.)	SPECIAL BACKFILL (CU. YD.)	FLOWABLE FILL (CU. YD.)	RIPRAP CLASS ____ (CU. YD.) OUTLET	COVER (FT.)

Ⓐ INCLUDES CUTOFF WALLS FOR BOTH INLET AND OUTLET ENDS AND EDGE PROTECTION FOR INLET ONLY.

Ⓑ INCLUDES 3" LOOSE BEDDING MATERIAL.

NOTE: INCLUDE REINFORCING MATERIAL IN THE UNIT PRICE BID PER CUBIC YARD OF CONCRETE.
INCLUDE ANCHOR BOLTS IN THE UNIT PRICE BID PER LINEAR FOOT OF CULVERT.
QUANTITIES ARE BASED ON THE DIMENSIONS IN the TABLE.

NO SCALE

DETAIL
BEDDING FOR DOUBLE
STRUCTURAL STEEL PLATE
PIPE ARCH CULVERTS