Date Re		Safety 5/5/08		
Act	Info	Mail Route	Act	Info
		Chief		
		Traffic Engineer		
		Assistant		
		Electrical		
		Engineering		
		Geometrics		
		Investigations		
		Safety		
		Signing		
		Special Studies		
		Safety Management		
		Rail Highway Safety		
	✓	File		

serving you with pride

Montana Department of Transportation
PO Box 201001
Helena, MT 59620-1001

Memorandum

To: Distribution

From: Paul Ferry, P.E.
Highways Engineer

Date: April 30, 2008

Subject: Curb Dimensions

Recently a number of inconsistencies as to how we dimension curb sections have been identified. The Road Design Manual instructs designers to show dimensions to the top back of curb. The Traffic & Safety Bureau shows dimensions to the face of curb. The difference between the two methods has resulted in errors in the plans.

We have discussed the preferred location with Construction and they have determined that all dimensions should be shown to the top back of curb, including median curb. Both the median curb and cast-in-place curb are still measured for payment along the face of the curb.

The face of the curb is 0.5' from top back of curb for standard cast-in-place curb and gutter (refer to Detailed Drawing 609-05), and the face is 1.0' from top back of curb for precast median concrete curb (refer to Detailed Drawing 609-10). Note that sometimes cast-in-place curb and gutter is used in place of precast median curb for raised medians and traffic islands.

On projects with curb and gutter, the curb radii will need to be adjusted to account for the distance from the back of curb to the face of curb to ensure that adequate roadway widths are provided for intersecting roadways.

Example:

The roadway intersecting the mainline has a width of 30 feet and the curb radii that are to be used are 25 feet. If the radii shown on the plans are 25 feet, field construction personnel will measure 25' from the origin of the radius to the back of curb. If the stations of the origins show that they are 80' apart (25'+30'+25'), the resultant roadway width would be 29' instead of 30'.

To remedy this, both corner radii shown on the plans should be modified by 0.5' away from the center of the intersection. This will provide the 25' radius to the back of the curb and the required 30-foot roadway width (measured from face of curb to face of curb). (See attached detail).

If you have questions concerning this, please contact me at 444-6244.

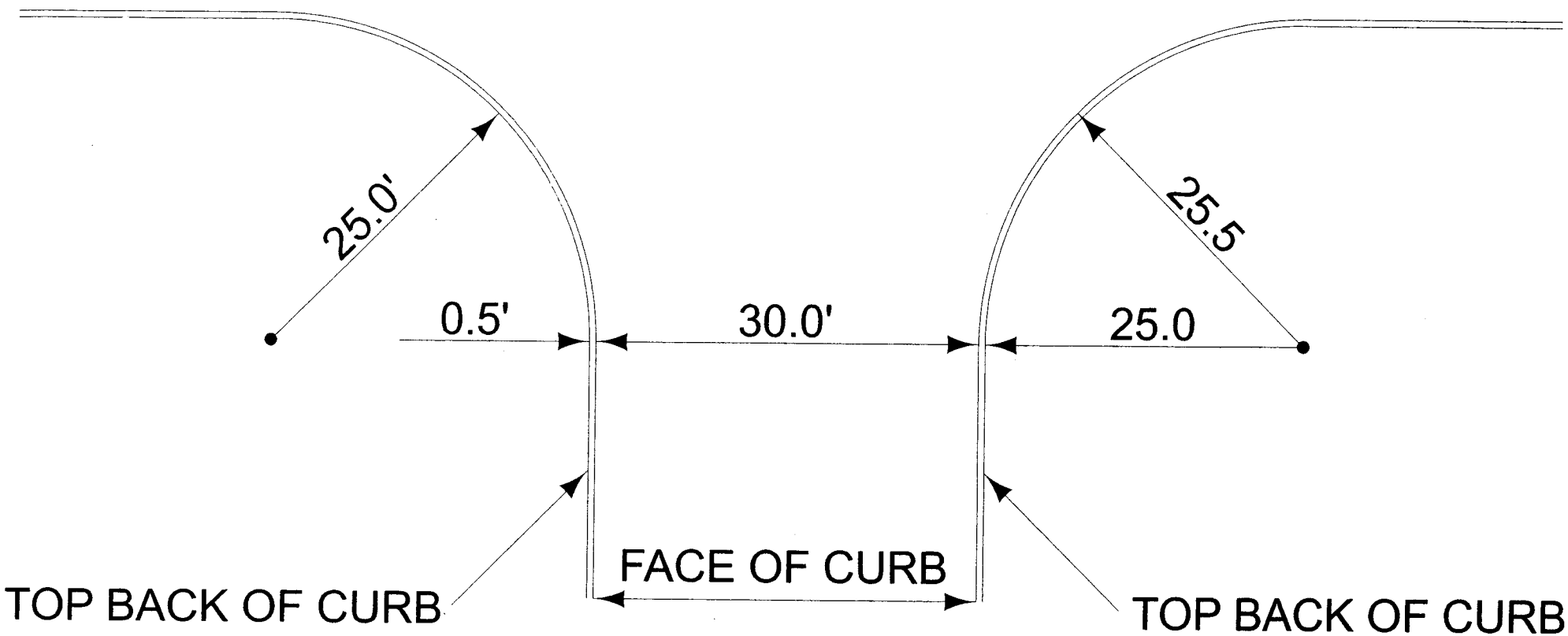
25.0'
25.5
0.5'
30.0'
25.0
FACE OF CURB
TOP BACK OF CURB
TOP BACK OF CURB

Pf.

Attachment

Distribution:

Kevin Christensen,	Construction Engineer	w/attachment
Lisa Durbin	Construction Administration Services Engineer	"
Paul Jagoda,	Construction Engineering Services Engineer	"
Lesly Tribelhorn,	Highways Design Engineer	"
Damian Krings,	Road Design Engineer	"
Duane Williams,	Traffic & Safety Engineer	"
Danielle Bolan,	Traffic Engineer	"
Tim Conway,	Consultant Design Engineer	"
Bryan Veith,	Consultant Design Checker	"
Suzy Price,	Supervisor – Contract Plans Bureau	"
Chris Clearman,	Contract Plans Bureau	"
Jim Frank,	Glendive District Engineering Services Supervisor	"
Gary Neville,	Billings District Engineering Services Supervisor	"
Joe Olsen,	Butte District Engineering Services Supervisor	"
Shane Stack,	Missoula District Engineering Services Supervisor	"
Steve Prinzing,	Great Falls District Engineering Services Suprvr,	"
John Cornell,	Road Plans Checker	"
Kevin Farry,	Road Plans Checker	"