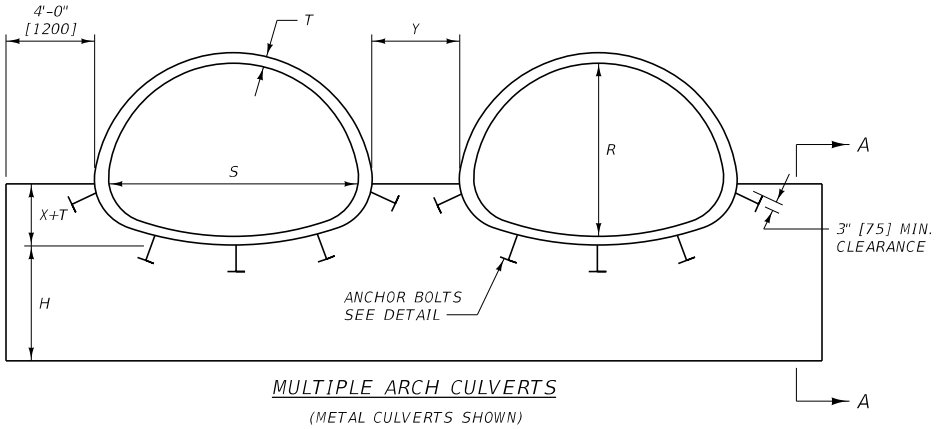

MULTIPLE ARCH CULVERTS

(METAL CULVERTS SHOWN)

X: VARIABLE. FOR METAL CULV. SEE DTL. DWG. 603-32 (CIRCULAR) OR 603-34 (ARCH), AND FOR CONCRETE CULV. WITH FETS SEE DTL. DWG. 603-08 (ROUND) OR 603-10 (ARCH), AND FOR CONCRETE CULV. WITH SQUARE ENDS, THE "X" DIMENSIONS IS D/4 OR R/3

Y: FOR METAL CULV. AND CULV. WITHOUT FETS: Y = 4'-0" [1200] (OUTSIDE WALL TO OUTSIDE WALL)

FOR CONCRETE CULV. WITH FETS: USE Y AS REQUIRED FOR PARALLEL PIPE INSTALLATION, PER DTL. DWG. NO. 613-08

NOTE: Y MAY BE INCREASED ON LARGE DIAMETER PIPES (UP TO A MAX. OF 8'-0" [2400]) TO AID IN INSTALLATION AND BACKFILL. THE QUANTITIES SHOWN IN 552-04, 06 & 08 WERE FIGURED USING Y = 4'-0" [1200]. ADJUST QUANTITIES AS NEEDED WHEN Y IS OTHER THAN 4'-0" [1200].

H: 3'-0" [900]MIN. OR 1'-0" [300]BELOW BOTTOM OF FOUNDATION MATERIAL IF SPECIFIED.

T: CULVERT WALL THICKNESS FOR CONCRETE OR CORRUGATION DEPTH FOR METAL.

S: INSIDE PIPE SPAN

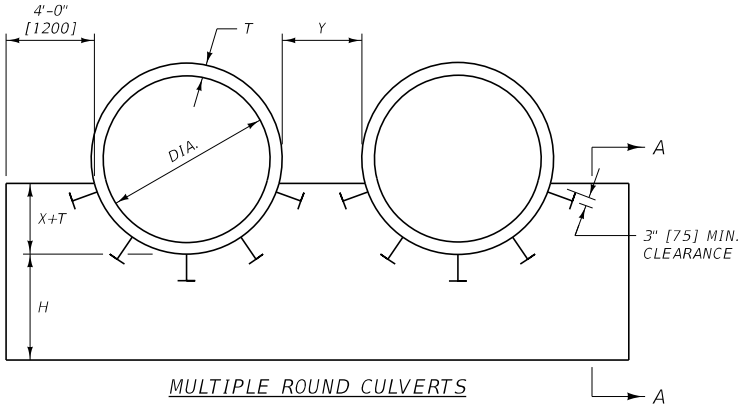

MULTIPLE ROUND CULVERTS

(METAL CULVERTS SHOWN)

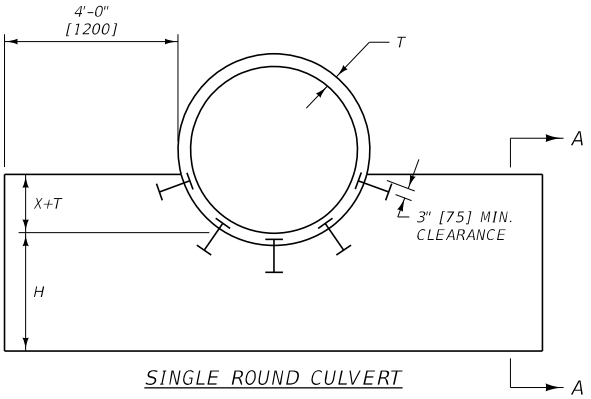

SINGLE ROUND CULVERT

(CONCRETE CULVERT SHOWN)

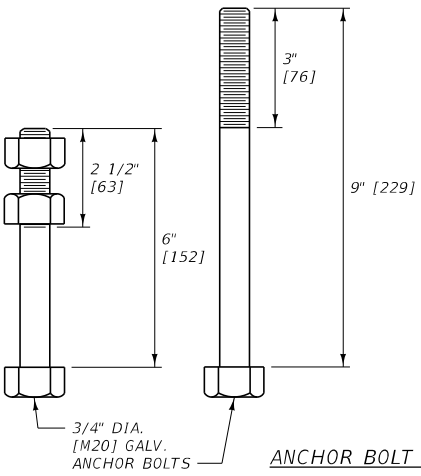

ANCHOR BOLT DETAILS

6" [152] LONG FOR METAL PIPE
9" [229] LONG FOR CONCRETE PIPE

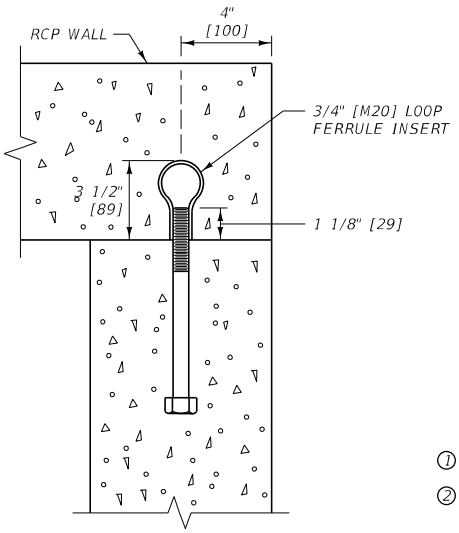

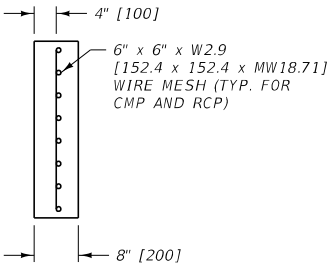

SECTION A-A

NOTES:

1. USE CLASS GENERAL CONCRETE OR EQUAL.
2. SEE DTL. DWG. NO. 603-18 AND 603-19 FOR BEDDING UNDER CULVERTS.

ANCHOR BOLT SPACING:
MIN. OF FIVE 3/4" DIA. [M20] GALV. ANCHOR BOLTS IN WALL. USE MAX. SPACING OF 1.5' [455].

REINFORCING STEEL:
USE REBAR DOWELS MEETING THE REQUIREMENTS OF AASHTO M 31 GRADE 60 (GRADE 420).

EPOXY RESIN BONDING ADHESIVE:
MEET THE REQUIREMENTS OF AASHTO M 235 TYPE 4.

UNITS SHOWN IN BRACKETS [] ARE METRIC AND ARE IN MILLIMETERS (mm) UNLESS OTHER UNITS ARE SHOWN.

DETAILED DRAWING	
REFERENCE STANDARD SPEC. SECTION 552,603,613	DWG. NO. 552-00
CONCRETE CUTOFF WALLS FOR CULVERTS	
MDT MONTANA DEPARTMENT OF TRANSPORTATION	

CULVERT INSTALLATION QUANTITIES

DIAMETER OR SPAN x RISE	CUBIC YARDS OF CLASS GENERAL CONCRETE (EACH END)								CUBIC YARDS OF RIPRAP (EACH END) 1 (DTL. DWG. NO. 613-14)		CUBIC YARDS GRANULAR BEDDING MATERIAL PER FOOT OF PIPE (DTL. DWG. NO. 603-19) 2	
	CUTOFF WALL (DTL. DWG. NO. 552-00)						CONCRETE EDGE PROTECTION (DTL. DWG. NO. 613-08)					
	H=3ft		H=4ft		H=5ft		2:1		2:1			
	SING.	DBL.	SING.	DBL.	SING.	DBL.	SING.	DBL.	SING.	DBL.	SING.	DBL.
RCP (SQ. END)												
54"	1.4	2.3	1.7	2.9	2.2	3.4	2.7	4.0	11.3	18.2	0.7	1.4
60"	1.5	2.5	1.8	3.1	2.2	3.7	3.0	4.4	12.2	19.7	0.8	1.5
66"	1.6	2.6	1.9	3.3	2.3	3.9	3.2	4.8	13.1	21.3	0.8	1.7
72"	1.7	2.8	2.0	3.5	2.4	4.1	3.5	5.2	14.0	22.8	0.9	1.8
78"	1.8	3.0	2.1	3.7	2.5	4.4	3.8	5.6	14.9	24.3	1.0	2.0
84"	1.9	3.2	2.3	3.9	2.7	4.6	4.0	6.0	15.8	25.9	1.1	2.1
90"	2.0	3.4	2.4	4.1	2.3	4.8	4.3	6.4	16.8	27.5	1.2	2.3
96"	2.1	3.6	2.5	4.3	2.3	5.1	4.6	6.9	17.7	29.1	1.2	2.5
RCPA (SQ. END)												
65.00" x 40.00"	1.4	2.4	1.8	3.0	2.1	3.6	2.3	3.5	10.1	16.6	0.7	1.4
73.00" x 45.00"	1.5	2.6	1.9	3.2	2.3	3.8	2.5	3.8	11.0	18.1	0.7	1.5
88.00" x 54.00"	1.7	2.9	2.1	3.6	2.5	4.3	3.0	4.6	12.6	20.9	0.9	1.8
102.00" x 62.00"	1.9	3.2	2.3	4.0	2.8	4.8	3.4	5.2	14.1	23.7	1.0	2.0
115.00" x 72.00"	2.1	3.5	2.5	4.4	3.0	5.2	3.8	5.9	15.7	26.4	1.1	2.2
122.00" x 77.25"	2.2	3.7	2.6	4.6	3.1	5.5	4.1	6.4	16.6	28.1	1.2	2.4
138.00" x 87.13"	2.4	4.1	2.9	5.0	3.4	6.0	4.6	7.3	18.6	31.6	1.3	2.7
154.00" x 95.88"	2.6	4.5	3.1	5.5	3.7	6.5	5.2	8.2	20.7	35.3	1.5	3.0
168.75" x 106.50"	2.7	4.7	3.3	5.8	3.9	6.9	5.6	8.9	22.2	38.0	1.6	3.2

CULVERT INSTALLATION QUANTITIES

DIAMETER OR SPAN x RISE (mm)	CUBIC METERS OF CLASS GENERAL CONCRETE (EACH END)								CUBIC METERS OF RIPRAP (EACH END) 1 (DTL DWG. NO. 613-14)		CUBIC METERS GRANULAR BEDDING MATERIAL PER METER OF PIPE (DTL. DWG. NO. 603-19) 2	
	CUTOFF WALL (DTL. DWG. NO. 552-00)						CONCRETE EDGE PROTECTION (DTL. DWG. NO. 613-08)					
	H=915 mm		H=1220 mm		H=1525 mm		2:1		2:1			
	SING.	DBL.	SING.	DBL.	SING.	DBL.	SING.	DBL.	SING.	DBL.	SING.	DBL.
RCP (SQ. END)												
1350	1.1	1.8	1.3	2.2	1.5	2.6	2.1	3.1	8.6	13.9	1.8	3.5
1500	1.1	1.9	1.4	2.4	1.7	2.8	2.3	3.4	9.3	15.1	2.0	3.8
1650	1.2	2.0	1.5	2.5	1.8	3.0	2.4	3.7	10.0	16.3	2.0	4.3
1800	1.3	2.1	1.5	2.7	1.8	3.1	2.7	4.0	10.7	17.4	2.3	4.5
1950	1.4	2.3	1.6	2.8	1.9	3.4	2.9	4.3	11.4	18.6	2.5	5.0
2100	1.5	2.4	1.8	3.0	2.1	3.5	3.1	4.6	12.1	19.8	2.8	5.3
2250	1.5	2.6	1.8	3.1	2.1	3.7	3.3	4.9	12.8	21.0	3.0	5.8
2400	1.6	2.8	1.9	3.3	2.2	3.9	3.5	5.3	13.5	22.2	3.0	6.3
RCPA (SQ. END)												
1650 x 1015	1.1	1.8	1.4	2.3	1.6	2.8	1.8	2.7	7.7	12.7	1.8	3.5
1895 x 1145	1.1	2.0	1.5	2.4	1.8	2.9	1.9	2.9	8.4	13.8	1.8	3.8
2235 x 1370	1.3	2.2	1.6	2.8	1.9	3.3	2.3	3.5	9.6	16.0	2.3	4.5
2590 x 1575	1.5	2.4	1.8	3.1	2.1	3.7	2.6	4.0	10.8	18.1	2.5	5.0
2920 x 1830	1.6	2.7	1.9	3.4	2.3	4.0	2.9	4.5	12.0	20.2	2.8	5.5
3100 x 1960	1.7	2.8	2.0	3.5	2.4	4.2	3.1	4.9	12.7	21.5	3.0	6.0
3505 x 2215	1.8	3.1	2.2	3.8	2.6	4.6	3.5	5.6	14.2	24.2	3.3	6.8
3910 x 2460	2.0	3.4	2.4	4.2	2.8	5.0	4.0	6.3	15.8	27.0	3.8	7.5
4285 x 2705	2.1	3.6	2.5	4.4	3.0	5.3	4.3	6.8	17.0	29.1	4.0	8.0

DIAMETER OR SPAN x RISE	CUBIC YARDS OF CLASS GENERAL CONCRETE (EACH END)								CUBIC YARDS OF RIPRAP (EACH END) 1 (DTL. DWG. NO. 613-14)		CUBIC YARDS GRANULAR BEDDING MATERIAL PER FOOT OF PIPE (DTL. DWG. NO. 603-19) 2		SLOPE 3
	CUTOFF WALL (DTL. DWG. NO. 552-00)						CONCRETE EDGE PROTECTION (DTL. DWG. NO. 613-08)						
	H=3ft		H=4ft		H=5ft								
	SING.	DBL.	SING.	DBL.	SING.	DBL.	SING.	DBL.	SING.	DBL.	SING.	DBL.	
RCP (FETS)													
54"	1.8	3.0	2.2	3.7	2.6	4.4	3.0	4.7	10.1	17.0	0.7	1.4	2.0:1
60"	2.0	3.3	2.4	4.0	2.8	4.8	2.6	4.2	10.6	18.0	0.8	1.5	1.9:1
66"	1.9	3.2	2.3	3.9	2.7	4.7	2.9	4.6	12.0	20.3	0.8	1.7	1.7:1
72"	2.0	3.4	2.5	4.2	2.9	5.0	3.1	4.9	13.0	22.1	0.9	1.8	1.9:1
78"	2.1	3.5	2.5	4.3	3.0	5.2	3.4	5.5	14.2	24.2	1.0	2.0	1.8:1
84"	2.1	3.6	2.6	4.4	3.1	5.3	3.5	5.6	14.0	23.9	1.1	2.1	1.5:1
90"	2.5	4.2	3.0	5.2	3.5	6.2	3.9	6.4	15.8	27.5	1.2	2.3	1.5:1
RCPA (FETS)													
65.00" x 40.00"	1.7	2.9	2.1	3.6	2.6	4.4	2.8	4.5	14.4	24.5	0.7	1.4	3.0:1
73.00" x 45.00"	1.9	3.2	2.3	3.9	2.7	4.7	2.8	4.5	14.7	25.2	0.7	1.5	3.0:1
88.00" x 54.00"	2.1	3.5	2.6	4.4	3.0	5.2	2.8	4.5	12.7	21.9	0.9	1.8	2.0:1
102.00" x 62.00"	2.1	3.7	2.6	4.6	3.2	5.6	3.7	6.0	15.5	26.9	1.0	2.0	2.0:1

DIAMETER OR SPAN x RISE (mm)	CUBIC METERS OF CLASS GENERAL CONCRETE (EACH END)								CUBIC METERS OF RIPRAP (EACH END) 1 (DTL. DWG. NO. 613-14)		CUBIC METERS GRANULAR BEDDING MATERIAL PER METER OF PIPE (DTL. DWG. NO. 603-19) 2		SLOPE 3
	CUTOFF WALL (DTL. DWG. NO. 552-00)						CONCRETE EDGE PROTECTION (DTL. DWG. NO. 613-08)						
	H=915 mm		H=1220 mm		H=1525 mm								
	SING.	DBL.	SING.	DBL.	SING.	DBL.	SING.	DBL.	SING.	DBL.	SING.	DBL.	
RCP (FETS)													
1350	1.4	2.3	1.7	2.8	2.0	3.4	2.3	3.6	7.7	13.0	1.8	3.5	2.0:1
1500	1.5	2.5	1.8	3.1	2.1	3.7	2.0	3.2	8.1	13.8	2.0	3.8	1.9:1
1650	1.5	2.4	1.8	3.0	2.1	3.6	2.2	3.5	9.2	15.5	2.0	4.3	1.7:1
1800	1.5	2.6	1.9	3.2	2.2	3.8	2.4	3.7	9.9	16.9	2.3	4.5	1.9:1
1950	1.6	2.7	1.9	3.3	2.3	4.0	2.6	4.2	10.9	18.5	2.5	5.0	1.8:1
2100	1.6	2.8	2.0	3.4	2.4	4.1	2.7	4.3	10.7	18.3	2.8	5.3	1.5:1
2250	1.9	3.2	2.3	4.0	2.7	4.7	3.0	4.9	12.1	21.0	3.0	5.8	1.5:1
RCPA (FETS)													
1650 x 1015	1.3	2.2	1.6	2.8	2.0	3.4	2.1	3.4	11.0	18.7	1.8	3.5	3.0:1
1895 x 1145	1.5	2.4	1.8	3.0	2.1	3.6	2.1	3.4	11.2	19.3	1.8	3.8	3.0:1
2235 x 1370	1.6	2.7	2.0	3.4	2.3	4.0	2.1	3.4	9.7	16.7	2.3	4.5	2.0:1
2590 x 1575	1.6	2.8	2.0	3.5	2.4	4.3	2.8	4.6	11.9	20.6	2.5	5.0	2.0:1

NOTES:

1. CULVERT RIPRAP IS USED ONLY IN SPECIAL CICRUMSTANCE. QUANTITIES ARE BASED ON A THICKNESS OF 2 FT. [600] AND ARE PROPORTIONED WHEN A DIFFERENT THICKNESS IS SPECIFIED.

2. GRANULAR BEDDING QUANTITIES FOR CONCRETE PIPES ARE BASED ON BEDDING DETAILS SHOWN ON DTL. DWG. NO. 603-19 WITH A WIDTH EQUAL TO (DIAMETER OR SPAN) + 4 FT. [1200] + (2 TIMES CONCRETE SHELL THICKNESS) AND A DEPTH EQUAL TO 1 FT. [300] + (D/4 OR R/3) + (CONCRETE SHELL THICKNESS). TO COMPUTE THE TOTAL BEDDING QUANTITY MULTIPLY BY (LENGTH OF PIPE MINUS 1.3 FT. [0.40 m]). EXTEND GRANULAR BEDDING TO BACK OF CUTOFF WALL.

3. FETS, CONCRETE EDGE PROTECTION, AND RIPRAP SLOPE

4. SEE DTL. DWG. NO 603-08 AND 603-10 FOR "X" DIMENSIONS FOR RCP AND RCPA WITH FETS. THE "X" DIMENSION FOR RCP AND RCPA WITH SQUARE ENDS IS D/4 OR R/3.

UNITS SHOWN IN BRACKETS [] ARE METRIC AND ARE IN MILLIMETERS (mm) UNLESS OTHER UNITS ARE SHOWN.

DETAILED DRAWING

REFERENCE
STANDARD SPEC.
SECTION 552,603,613

DWG. NO.
552-04

CONCRETE, RIPRAP AND GRANULAR BEDDING MATERIAL QUANTITIES FOR SING. AND DBL. CULVERT INSTALLATION

MDT MONTANA DEPARTMENT OF TRANSPORTATION

CULVERT INSTALLATION QUANTITIES

DIAMETER OR SPAN x RISE	CUBIC YARDS OF CLASS GENERAL CONCRETE (EACH END) 4								CUBIC YARDS OF RIPRAP (EACH END) 1 4 (DTL. DWG. NO. 613-14)		CUBIC YARDS GRANULAR BEDDING 2 MATERIAL PER FOOT OF PIPE (DTL. DWG. NO. 603-19)	
	CUTOFF WALL (DTL. DWG. NO. 552-00)						CONCRETE EDGE PROTECTION (DTL. DWG. NO. 613-06)					
	H=3ft		H=4'ft		H=5ft		2:1		2:1			
	SING.	DBL.	SING.	DBL..	SING.	DBL.	SING.	DBL.	SING.	DBL..	SING.	DBL.
SSPPA 6" X 2" CORRUGATIONS 18" CORNER RADIUS												
6'-1" x 4'-7"	1.5	2.4	1.8	3.1	2.2	3.7	2.6	3.8	10.9	17.8	0.7	1.4
6'-4" x 4'-9"	1.5	2.5	1.9	3.1	2.2	3.8	2.6	4.0	11.2	18.4	0.7	1.5
6'-9" x 4'-11"	1.5	2.6	1.9	3.2	2.3	3.9	2.7	4.1	11.6	19.0	0.8	1.5
7'-0" x 5' 1"	1.6	2.6	1.9	3.3	2.3	4.0	2.8	4.3	11.9	19.5	0.8	1.6
7'-3" x 5'-3"	1.6	2.7	2.0	3.4	2.4	4.0	2.9	4.4	12.2	20.1	0.8	1.6
7'-8" x 5'5"	1.6	2.8	2.0	3.5	2.4	4.2	3.0	4.6	12.6	20.7	0.8	1.7
7'-11' x 5'-7"	1.7	2.8	2.1	3.5	2.5	4.2	3.1	4.7	12.9	21.3	0.9	1.7
8'-2" x 5'-9"	1.7	2.9	2.1	3.6	2.5	4.3	3.2	4.8	13.2	21.8	0.9	1.7
8'-7" x 5'-11"	1.8	3.0	2.2	3.7	2.6	4.5	3.3	5.0	13.6	22.5	0.9	1.8
8'-10" x 6'-11'	1.8	3.0	2.2	3.8	2.6	4.5	3.4	5.2	13.9	23.1	0.9	1.8
9'-4" x 6'-3"	1.8	3.2	2.3	3.9	2.7	4.7	3.5	5.4	14.4	24.0	1.0	2.0
9'-6" x 6'-5"	1.9	3.2	2.3	4.0	2.7	4.8	3.5	5.5	14.6	24.4	1.0	1.9
9'-9" x 6'-7"	1.9	3.2	2.3	4.0	2.8	4.8	3.6	5.6	14.9	25.0	1.0	2.0
10'-3" x 6'-9"	2.0	3.4	2.4	4.2	2.9	5.0	3.8	5.8	15.4	25.9	1.0	2.1
10'-8" x 6'-11"	2.0	3.5	2.5	4.3	3.0	5.2	3.9	6.0	15.8	26.6	1.1	2.2
10'-11" x 7'-1"	2.0	3.5	2.5	4.4	3.0	5.2	4.0	6.2	16.2	27.3	1.1	2.2
11'-5" x 7'-3"	2.1	3.7	2.6	4.6	3.1	5.4	4.1	6.4	16.7	28.2	1.2	2.4
12'-4" x 7'-9"	2.2	3.9	2.7	4.8	3.2	5.7	4.4	6.9	17.8	30.2	1.2	2.5
12'-6" x 7'-11"	2.2	3.9	2.7	4.8	3.3	5.8	4.5	7.0	18.1	30.7	1.2	2.5
12'-8" x 8'-1"	2.2	3.9	2.8	4.8	3.3	5.8	4.5	7.2	18.4	31.2	1.2	2.5
12'-10" x 8'-4"	2.3	3.9	2.8	4.9	3.3	5.8	4.7	7.3	18.7	31.8	1.2	2.5
13'-5" x 8'-5"	2.3	4.1	2.9	5.1	3.4	6.0	4.8	7.6	19.3	32.9	1.3	2.6
13'-11" x 8'-7"	2.4	4.2	3.0	5.2	3.5	6.2	4.9	7.8	19.8	33.8	1.4	2.8
14'-1" x 8'-9"	2.4	4.3	3.0	5.3	3.5	6.3	5.0	7.9	20.1	34.4	1.4	2.8
14'-3" x 8'-11"	2.4	4.3	3.0	5.3	3.6	6.3	5.1	8.1	20.4	34.9	1.4	2.7
14'-10" x 9'-1"	2.5	4.5	3.1	5.5	3.7	6.5	5.2	8.3	21.0	36.1	1.5	2.9
15'-4" x 9'-2"	2.6	4.6	3.2	5.7	3.8	6.8	5.3	8.5	21.5	36.9	1.5	3.1
15'-6" x 9'-5"	2.6	4.6	3.2	5.7	3.8	6.8	5.5	8.7	21.9	37.6	1.5	3.1
15'-8" x 9'-7"	2.6	4.6	3.2	5.7	3.8	6.8	5.6	8.9	22.2	38.2	1.5	3.0
15'-10" x 9'-9"	2.6	4.6	3.2	5.7	3.8	6.8	5.6	9.0	22.5	38.7	1.5	3.0
16'-5" x 9'-11"	2.7	4.8	3.3	6.0	4.0	7.1	5.8	9.3	23.2	40.0	1.6	3.2
16'-7" x 10'-1"	2.7	4.8	3.4	6.0	4.0	7.1	5.9	9.5	23.5	40.5	1.6	3.2
SSPPA 6" X 2" CORRUGATIONS 31" CORNER RADIUS												
13'-3" x 9'-4"	2.4	4.3	3.0	5.2	3.5	6.2	5.0	7.9	19.9	33.8	1.4	2.9
13'-6" x 9'-6"	2.5	4.3	3.0	5.3	3.5	6.3	5.1	8.0	20.3	34.5	1.4	2.9
14'-0" x 9'-8"	2.5	4.5	3.1	5.5	3.6	6.5	5.3	8.3	20.9	35.5	1.5	3.0
14'-3" x 9'-10"	2.6	4.5	3.1	5.5	3.7	6.5	5.4	8.5	21.3	36.2	1.5	3.0
14'-5" x 10'-0"	2.6	4.5	3.1	5.5	3.7	6.6	5.5	8.6	21.5	36.7	1.5	3.0
14'-11" x 10'-2"	2.7	4.7	3.2	5.7	3.8	6.8	5.6	8.8	22.1	37.8	1.6	3.2
15'-4" x 10'-4"	2.7	4.8	3.3	5.9	3.9	6.9	5.7	9.0	22.5	38.5	1.7	3.3
15'-7" x 10'-6"	2.7	4.8	3.3	5.9	3.9	7.0	5.8	9.2	23.0	39.3	1.7	3.3
15'-10" x 10'-8"	2.8	4.9	3.4	6.0	4.0	7.1	5.9	9.4	23.4	40.1	1.7	3.3
16'-3" x 10'-10"	2.8	5.0	3.4	6.1	4.1	7.2	6.0	9.6	23.8	40.8	1.7	3.5
16'-6" x 11'-0"	2.9	5.1	3.5	6.2	4.1	7.3	6.2	9.8	24.2	41.6	1.7	3.5
17'-0" x 11'-2"	2.9	5.2	3.6	6.4	4.2	7.5	6.3	10.1	24.8	42.7	1.8	3.6
17'-2" x 11'-4"	3.0	5.2	3.6	6.4	4.2	7.5	6.4	10.2	25.1	43.3	1.8	3.6
17'-5" x 11'-6"	3.0	5.3	3.6	6.4	4.2	7.6	6.5	10.4	25.6	44.1	1.8	3.6
17'-11" x 11'-8"	3.1	5.4	3.7	6.6	4.4	7.8	6.7	10.7	26.1	45.2	1.9	3.8
18'-1" x 11'-10"	3.1	5.4	3.7	6.6	4.4	7.8	6.7	10.8	26.5	45.7	1.9	3.8
18'-7" x 12'-0"	3.2	5.6	3.8	6.8	4.5	8.1	6.9	11.1	27.1	46.8	2.0	4.0
18'-9" x 12'-2"	3.2	5.6	3.8	6.8	4.5	8.1	7.0	11.2	27.4	47.4	2.0	3.9
19'-3" x 12'-4"	3.3	5.8	3.9	7.1	4.6	8.3	7.1	11.5	28.0	48.5	2.1	4.1
19'-6" x 12'-6"	3.3	5.8	4.0	7.1	4.6	8.4	7.3	11.7	28.4	49.4	2.1	4.1
19'-8" x 12'-8"	3.3	5.8	4.0	7.1	4.7	8.4	7.3	11.9	28.8	50.0	2.0	4.1
19'-11" x 12'-10'	3.3	5.8	4.0	7.1	4.7	8.4	7.5	12.1	29.2	50.8	2.0	4.1
20'-3" x 13'-0"	3.4	6.0	4.1	7.3	4.8	8.6	7.6	12.2	29.5	51.4	2.1	4.2
20'-7" x 13'-2"	3.4	6.0	4.1	7.4	4.8	8.7	7.7	12.5	30.2	52.6	2.1	4.2

CULVERT INSTALLATION QUANTITIES

DIAMETER OR SPAN x RISE (m)	CUBIC METERS OF CLASS GENERAL CONCRETE (EACH END) 4								CUBIC METERS OF RIPRAP (EACH END) 1 4 (DTL. DWG. NO. 613-14)		CUBIC METERS GRANULAR BEDDING 2 MATERIAL PER METER OF PIPE (DTL. DWG. NO. 603-19)	
	CUTOFF WALL (DTL. DWG. NO. 552-00)						CONCRETE EDGE PROTECTION (DTL. DWG. NO. 613-06)					
	H=915 mm		H=1220 mm		H=1525 mm		2:1		2:1			
	SING.	DBL.	SING.	DBL.	SING.	DBL.	SING.	DBL.	SING.	DBL.	SING.	DBL.
SSPPA 152 mm X 51 mm CORRUGATIONS 457 mm CORNER RADIUS												
1.850 x 1.400	1.1	1.8	1.4	2.4	1.7	2.8	2.0	2.9	8.3	13.6	1.8	3.5
1.930 x 1.450	1.1	1.9	1.5	2.4	1.7	2.9	2.0	3.1	8.6	14.1	1.8	3.8
2.060 x 1.500	1.1	2.0	1.5	2.4	1.8	3.0	2.1	3.1	8.9	14.5	2.0	3.8
2.130 x 1.550	1.2	2.0	1.5	2.5	1.8	3.1	2.1	3.3	9.1	14.9	2.0	4.0
2.210 x 1.600	1.2	2.1	1.5	2.6	1.8	3.1	2.2	3.4	9.3	15.4	2.0	4.0
2.340 x 1.650	1.2	2.1	1.5	2.7	1.8	3.2	2.3	3.5	9.6	15.8	2.0	4.3
2.410 x 1.700	1.3	2.1	1.6	2.7	1.9	3.2	2.4	3.6	9.9	16.3	2.3	4.3
2.490 x 1.750	1.3	2.2	1.6	2.8	1.9	3.3	2.4	3.7	10.1	16.7	2.3	4.3
2.620 x 1.800	1.4	2.3	1.7	2.8	2.0	3.4	2.5	3.8	10.4	17.2	2.3	4.5
2.690 x 1.850	1.4	2.3	1.7	2.9	2.0	3.4	2.6	4.0	10.6	17.7	2.3	4.5
2.840 x 1.510	1.4	2.4	1.8	3.0	2.1	3.6	2.7	4.1	11.0	18.3	2.5	5.0
2.900 x 1.960	1.5	2.4	1.8	3.1	2.1	3.7	2.7	4.2	11.2	18.7	2.5	4.8
2.970 x 2.010	1.5	2.4	1.8	3.1	2.1	3.7	2.8	4.3	11.4	19.1	2.5	5.0
3.120 x 2.060	1.5	2.6	1.8	3.2	2.2	3.8	2.9	4.4	11.8	19.8	2.5	5.3
3.250 x 2.110	1.5	2.7	1.9	3.3	2.3	4.0	3.0	4.6	12.1	20.3	2.8	5.5
3.330 x 2.160	1.5	2.7	1.9	3.4	2.3	4.0	3.1	4.7	12.4	20.9	2.8	5.5
3.480 x 2.210	1.6	2.8	2.0	3.5	2.4	4.1	3.1	4.9	12.8	21.6	3.0	6.0
3.760 x 2.360	1.7	3.0	2.1	3.7	2.4	4.4	3.4	5.3	13.6	23.1	3.0	6.3
3.810 x 2.410	1.7	3.0	2.1	3.7	2.5	4.4	3.4	5.4	13.8	23.5	3.0	6.3
3.860 x 2.460	1.7	3.0	2.1	3.7	2.5	4.4	3.4	5.5	14.1	23.9	3.0	6.3
3.910 x 2.540	1.8	3.0	2.1	3.7	2.5	4.4	3.6	5.6	14.3	24.3	3.0	6.3
4.090 x 2.570	1.8	3.1	2.2	3.9	2.6	4.6	3.7	5.8	14.8	25.2	3.3	6.5
SSPPA 152 mm X 51 mm CORRUGATIONS 787 mm CORNER RADIUS												
4.040 x 2.840	1.8	3.3	2.3	4.0	2.7	4.7	3.8	6.0	15.2	25.8	3.5	7.3
4.110 x 2.900	1.9	3.3	2.3	4.1	2.7	4.8	3.9	6.1	15.5	26.4	3.5	7.3
4.270 x 2.950	1.9	3.4	2.4	4.2	2.8	5.0	4.1	6.3	16.0	27.1	3.8	7.5
4.320 x 3.000	2.0	3.4	2.4	4.2	2.8	5.0	4.1	6.5	16.3	27.7	3.8	7.5
4.390 x 3.050	2.0	3.4	2.4	4.2	2.8	5.0	4.2	6.6	16.4	28.1	3.8	7.5
4.550 x 3.100	2.1	3.6	2.4	4.4	2.9	5.2	4.3	6.7	16.9	28.9	4.0	8.0
4.670 x 3.150	2.1	3.7	2.5	4.5	3.0	5.3	4.4	6.9	17.2	29.4	4.3	8.3
4.750 x 3.200	2.1	3.7	2.5	4.5	3.0	5.4	4.4	7.0	17.6	30.0	4.3	8.3
4.830 x 3.250	2.1	3.7	2.6	4.6	3.1	5.4	4.5	7.2	17.9	30.7	4.3	8.3
4.950 x 3.300	2.1	3.8	2.6	4.7	3.1	5.5	4.6	7.3	18.2	31.2	4.3	8.8
5.030 x 3.350	2.2	3.9	2.7	4.7	3.1	5.6	4.7	7.5	18.5	31.8	4.3	8.8
5.180 x 3.400	2.2	4.0	2.8	4.9	3.2	5.7	4.8	7.7	19.0	32.6	4.5	9.0
5.230 x 3.490	2.3	4.0	2.8	4.9	3.2	5.7	4.9	7.8	19.2	33.1	4.5	9.0
5.310 x 3.510	2.3	4.1	2.8	4.9	3.2	5.8	5.0	8.0	19.6	33.7	4.5	9.0
5.460 x 3.560	2.4	4.1	2.8	5.0	3.4	6.0	5.1	8.2	20.0	34.6	4.8	9.5
5.510 x 3.610	2.4	4.1	2.8	5.0	3.4	6.0	5.1	8.3	20.3	34.9	4.8	9.5
5.660 x 3.660	2.4	4.3	2.9	5.2	3.4	6.2	5.3	8.5	20.7	35.8	5.0	10.0
5.720 x 3.710	2.4	4.3	2.9	5.2	3.4	6.2	5.4	8.6	20.9	36.2	5.0	9.8
5.870 x 3.710	2.5	4.4	3.0	5.4	3.5	6.3	5.4	8.8	21.4	37.1	5.3	10.3
5.940 x 3.810	2.5	4.4	3.1	5.4	3.5	6.4	5.6	8.9	21.7	37.8	5.3	10.3
5.990 x 3.860	2.5	4.4	3.1	5.4	3.6	6.4	5.6	9.1	22.0	38.2	5.0	10.3
6.070 x 3.910	2.5	4.4	3.1	5.4	3.6	6.4	5.7	9.3	22.3	38.8	5.0	10.3
6.220 x 3.960	2.6	4.6	3.1	5.6	3.7	6.6	5.8	9.3	22.6	39.3	5.3	10.5
6.270 x 4.010	2.6	4.6	3.1	5.7	3.7	6.7	5.9	9.6	23.1	40.2	5.3	10.5

NOTES:

1. CONCRETE EDGE PROTECTION IS STANDARD FOR METAL CULVERT INLET AND OUTLET PROTECTION. CULVERT RIPRAP IS ONLY USED IN SPECIAL CIRCUMSTANCES. QUANTITIES ARE BASED ON A THICKNESS OF 2 FT. [600] AND ARE PROPORTIONED WHEN A DIFFERENT THICKNESS IS SPECIFIED.

2. GRANULAR BEDDING QUANTITIES FOR METAL PIPES ARE BASED ON BEDDING DETAILS SHOWN ON DTL. DWG. NO. 603-19 WITH A WIDTH EQUAL TO (DIAMETER OR SPAN) + 4 FT. [1200] + (2 TIMES CORRUGATION DEPTH) AND A DEPTH EQUAL TO 1FT. [300] + "X" + (CORRUGATION DEPTH). TO COMPUTE THE TOTAL BEDDING QUANTITY MULTIPLY BY (LENGTH OF PIPE MINUS 1.3 FT. [0.40 m]). EXTEND GRANULAR BEDDING TO BACK OF CUTOFF WALL.

3. SEE DTL. DWG. NO. 603-32 AND 603-34 FOR "X" DIMENSIONS OF METAL PIPES.

4. FOR PIPES WITH SKEW BEVEL ENDS - DIVIDE THE QUANTITIES SHOWN BY COSINE OF SKEW ANGLE.

UNITS SHOWN IN BRACKETS [] ARE METRIC AND ARE IN MILLIMETERS (mm) UNLESS OTHER UNITS ARE SHOWN.

DETAILED DRAWING

REFERENCE STANDARD SPEC. SECTION 552,603,613

DWG. NO. 552-06

CONCRETE, RIPRAP AND GRANULAR BEDDING MATERIAL QUANTITIES FOR SING. AND DBL. CULVERT INSTALLATION

MDT MONTANA DEPARTMENT OF TRANSPORTATION

CULVERT INSTALLATION QUANTITIES

DIAMETER OR SPAN x RISE	CUBIC YARDS OF CLASS GENERAL CONCRETE (EACH END) 4								CUBIC YARDS OF RIPRAP (EACH END) 1 (DTL. DWG. NO. 613-14) 4		CUBIC YARDS GRANULAR BEDDING 2 MATERIAL PER FOOT OF PIPE (DTL. DWG. NO. 603-19)	
	CUTOFF WALL (DTL. DWG. NO. 552-00)						CONCRETE EDGE PROTECTION (DTL. DWG. NO. 613-06)					
	H=3ft		H=4ft		H=5ft		2:1		2:1			
	SING.	DBL.	SING.	DBL.	SING.	DBL.	SING.	DBL.	SING.	DBL.	SING.	DBL.
CSP 3" x 1" OR 5" x 1" CORRUGATIONS												
54"	1.2	2.0	1.5	2.6	1.9	3.1	2.5	3.6	10.3	16.5	0.6	1.2
60"	1.3	2.2	1.6	2.7	2.0	3.3	2.7	4.0	11.1	17.9	0.6	1.3
66"	1.4	2.3	1.7	2.9	2.1	3.5	2.9	4.3	12.0	19.3	0.7	1.4
72"	1.5	2.5	1.8	3.1	2.2	3.7	3.2	4.7	12.8	20.7	0.7	1.5
78"	1.5	2.6	1.9	3.2	2.3	3.8	3.4	5.0	13.6	22.1	0.8	1.6
84"	1.6	2.7	2.0	3.4	2.4	4.0	3.6	5.4	14.4	23.5	0.9	1.7
90"	1.7	2.9	2.1	3.6	2.5	4.2	3.9	5.7	15.2	24.8	0.9	1.9
96"	1.8	3.0	2.2	3.7	2.6	4.4	4.1	6.1	16.1	26.2	1.0	2.0
102"	1.9	3.2	2.3	3.9	2.7	4.6	4.3	6.5	16.9	27.7	1.1	2.1
108"	1.9	3.3	2.4	4.1	2.8	4.8	4.6	6.9	17.7	29.1	1.1	2.3
114"	2.0	3.5	2.5	4.3	2.9	5.0	4.8	7.2	18.6	30.5	1.2	2.4
120"	2.1	3.7	2.6	4.5	3.0	5.3	5.1	7.6	19.5	32.0	1.3	2.6
SSPP 6" x 2" CORRUGATIONS												
10'-6"	2.2	3.9	2.7	4.7	3.2	5.5	5.4	8.1	20.5	33.9	1.4	2.8
11'-0"	2.3	4.0	2.8	4.9	3.3	5.8	5.6	8.5	21.4	35.4	1.5	2.9
11'-6"	2.4	4.2	2.9	5.1	3.4	6.0	5.9	8.9	22.3	37.0	1.5	3.1
12'-0"	2.5	4.4	3.0	5.3	3.5	6.2	6.2	9.3	23.2	38.5	1.6	3.2
12'-6"	2.6	4.6	3.1	5.5	3.6	6.4	6.4	9.7	24.2	40.1	1.7	3.4
13'-0"	2.7	4.7	3.2	5.7	3.7	6.6	6.7	10.1	25.1	41.7	1.8	3.6
13'-6"	2.8	4.9	3.3	5.9	3.9	6.9	6.9	10.6	26.0	43.3	1.9	3.7
14'-0"	2.9	5.1	3.4	6.1	4.0	7.1	7.2	11.0	27.0	45.0	2.0	3.9
14'-6"	3.0	5.3	3.5	6.3	4.1	7.3	7.5	11.4	27.9	46.7	2.1	4.1
15'-0"	3.1	5.4	3.6	6.5	4.2	7.6	7.8	11.9	28.9	48.3	2.1	4.3
15'-6"	3.2	5.6	3.8	6.7	4.3	7.8	8.0	12.3	29.9	50.0	2.2	4.5
16'-0"	3.3	5.8	3.9	6.9	4.5	8.0	8.3	12.8	30.8	51.8	2.3	4.7
16'-6"	3.4	6.0	4.0	7.1	4.6	8.3	8.6	13.2	31.8	53.5	2.4	4.9
17'-0"	3.5	6.2	4.1	7.4	4.7	8.5	8.9	13.7	32.8	55.3	2.5	5.0
17'-6"	3.6	6.4	4.2	7.6	4.8	8.8	9.2	14.1	33.9	57.0	2.6	5.2
18'-0"	3.7	6.6	4.3	7.8	5.0	9.0	9.4	14.6	34.9	58.8	2.7	5.5
18'-6"	3.8	6.8	4.4	8.0	5.1	9.3	9.7	15.1	35.9	60.7	2.8	5.7
19'-0"	3.9	7.0	4.6	8.3	5.2	9.5	10.0	15.5	37.0	62.5	2.9	5.9
19'-6"	4.0	7.2	4.7	8.5	5.4	9.8	10.3	16.0	38.0	64.4	3.0	6.1
20'-0"	4.1	7.4	4.8	8.7	5.5	10.0	10.6	16.5	39.1	66.2	3.2	6.3
20'-6"	4.2	7.6	4.9	8.9	5.6	10.3	10.9	17.0	40.1	68.1	3.3	6.5
21'-0"	4.3	7.8	5.1	9.2	5.8	10.5	11.2	17.5	41.2	70.0	3.4	6.8
CSPA 2 2/3" x 1/2" CORRUGATIONS												
64" x 43"	1.3	2.1	1.6	2.7	1.9	3.2	2.1	3.1	9.2	15.0	0.6	1.1
71" x 47"	1.3	2.2	1.7	2.8	2.0	3.4	2.2	3.4	9.8	16.1	0.6	1.2
77" x 52"	1.4	2.4	1.8	3.0	2.1	3.6	2.4	3.7	10.5	17.2	0.7	1.3
83" x 57"	1.5	2.5	1.8	3.1	2.2	3.8	2.6	3.9	11.1	18.3	0.7	1.4
CSPA 3" x 1" CORRUGATIONS												
60" x 46"	1.3	2.1	1.6	2.7	1.9	3.2	2.2	3.3	9.6	15.5	0.6	1.2
66" x 51"	1.4	2.3	1.7	2.9	2.0	3.4	2.4	3.6	10.3	16.7	0.7	1.3
73" x 55"	1.4	2.4	1.8	3.0	2.2	3.6	2.6	3.9	11.0	17.9	0.7	1.4
81" x 59"	1.5	2.5	1.9	3.2	2.2	3.8	2.8	4.1	11.6	18.9	0.8	1.5
87" x 63"	1.6	2.7	2.0	3.4	2.4	4.0	2.9	4.4	12.3	20.2	0.8	1.6
95" x 67"	1.7	2.8	2.1	3.5	2.5	4.2	3.1	4.7	12.9	21.3	0.9	1.7
103" x 71"	1.8	3.0	2.2	3.7	2.6	4.5	3.3	5.1	13.7	22.6	0.9	1.9
112" x 75"	1.8	3.2	2.3	3.9	2.7	4.7	3.5	5.4	14.4	23.8	1.0	2.0
117" x 79"	1.9	3.3	2.4	4.1	2.8	4.9	3.7	5.7	15.1	25.1	1.1	2.1
128" x 83"	2.0	3.5	2.5	4.3	2.9	5.1	3.9	6.0	15.8	26.4	1.1	2.2
137" x 87"	2.1	3.6	2.6	4.5	3.0	5.3	4.1	6.3	16.6	27.7	1.2	2.4
142" x 91"	2.2	3.8	2.7	4.6	3.1	5.5	4.2	6.6	17.2	28.9	1.2	2.5

CULVERT INSTALLATION QUANTITIES

DIAMETER OR SPAN x RISE (mm or m)	CUBIC METERS OF CLASS GENERAL CONCRETE (EACH END) 4								CUBIC METERS OF RIPRAP (EACH END) 1 (DTL. DWG. NO. 613-14) 4		CUBIC METERS GRANULAR BEDDING 2 MATERIAL PER METER OF PIPE (DTL. DWG. NO. 603-19)	
	CUTOFF WALL (DTL. DWG. NO. 552-00)						CONCRETE EDGE PROTECTION (DTL. DWG. NO. 613-06)					
	H=915 mm		H=1220 mm		H=1525 mm		2:1		2:1			
	SING.	DBL.	SING.	DBL.	SING.	DBL.	SING.	DBL.	SING.	DBL.	SING.	DBL.
CSP 75 mm x 25 mm OR 125 mm x 25mm CORRUGATIONS												
1350	0.9	1.5	1.1	2.0	1.5	2.4	1.9	2.8	7.9	12.6	1.5	3.0
1500	1.0	1.7	1.2	2.1	1.5	2.5	2.1	3.1	8.5	13.7	1.5	3.3
1650	1.1	1.8	1.3	2.2	1.6	2.7	2.2	3.3	9.2	14.8	1.8	3.5
1800	1.1	1.9	1.4	2.4	1.7	2.8	2.4	3.6	9.8	15.8	1.8	3.8
1950	1.1	2.0	1.5	2.4	1.8	2.9	2.6	3.8	10.4	16.9	2.0	4.0
2100	1.2	2.1	1.5	2.6	1.8	3.1	2.8	4.1	11.0	18.0	2.3	4.3
2250	1.3	2.2	1.6	2.8	1.9	3.2	3.0	4.4	11.6	19.0	2.3	4.8
2400	1.4	2.3	1.7	2.8	2.0	3.4	3.1	4.7	12.3	20.0	2.5	5.0
2550	1.5	2.4	1.8	3.0	2.1	3.5	3.3	5.0	12.9	21.2	2.8	5.3
2700	1.5	2.5	1.8	3.1	2.1	3.7	3.5	5.3	13.5	22.2	2.8	5.8
2850	1.5	2.7	1.9	3.3	2.2	3.8	3.7	5.5	14.2	23.3	3.0	6.0
3000	1.6	2.8	2.0	3.4	2.3	4.1	3.9	5.8	14.9	24.5	3.3	6.5
SSPP 152mm x 51 mm CORRUGATIONS												
3.205	1.7	3.0	2.1	3.6	2.4	4.2	4.1	6.2	15.7	25.9	3.5	7.0
3.360	1.8	3.1	2.1	3.7	2.5	4.4	4.3	6.5	16.4	27.1	3.8	7.3
3.515	1.8	3.2	2.2	3.9	2.6	4.6	4.5	6.8	17.0	28.3	3.8	7.8
3.670	1.9	3.4	2.3	4.1	2.7	4.7	4.7	7.1	17.7	29.4	4.0	8.0
3.825	2.0	3.5	2.4	4.2	2.8	4.9	4.9	7.4	18.5	30.7	4.3	8.5
3.980	2.1	3.6	2.4	4.4	2.8	5.0	5.1	7.7	19.2	31.9	4.5	9.0
4.135	2.1	3.7	2.5	4.5	3.0	5.3	5.3	8.1	19.9	33.1	4.8	9.3
4.290	2.2	3.9	2.6	4.7	3.1	5.4	5.5	8.4	20.6	34.4	5.0	9.8
4.445	2.3	4.1	2.7	4.8	3.1	5.6	5.7	8.7	21.3	35.7	5.3	10.3
4.600	2.4	4.1	2.8	5.0	3.2	5.8	6.0	9.1	22.1	36.9	5.3	10.8
4.755	2.4	4.3	2.9	5.1	3.3	6.0	6.1	9.4	22.9	38.2	5.5	11.3
4.910	2.5	4.4	3.0	5.3	3.4	6.1	6.3	9.8	23.5	39.6	5.8	11.8
5.065	2.6	4.6	3.1	5.4	3.5	6.3	6.6	10.1	24.3	40.9	6.0	12.3
5.220	2.7	4.7	3.1	5.7	3.6	6.5	6.8	10.5	25.1	42.3	6.3	12.5
5.375	2.8	4.9	3.2	5.8	3.7	6.7	7.0	10.8	25.9	43.6	6.5	13.0
5.530	2.8	5.0	3.3	6.0	3.8	6.9	7.2	11.2	26.7	45.0	6.8	13.8
5.685	2.9	5.2	3.4	6.1	3.9	7.1	7.4	11.5	27.4	46.4	7.0	14.3
5.840	3.0	5.4	3.5	6.3	4.0	7.3	7.6	11.9	28.3	47.8	7.3	14.8
5.995	3.1	5.5	3.6	6.5	4.1	7.5	7.9	12.2	29.1	49.2	7.5	15.3
6.150	3.1	5.7	3.7	6.7	4.2	7.6	8.1	12.6	29.9	50.6	8.0	15.8
6.305	3.2	5.8	3.7	6.8	4.3	7.9	8.3	13.0	30.7	52.1	8.3	16.3
6.460	3.3	6.0	3.9	7.0	4.4	8.0	8.6	13.4	31.5	53.5	8.5	17.1
CSPA 68 mm x 13 mm CORRUGATIONS												
1620 x 1100	1.0	1.6	1.2	2.1	1.5	2.4	1.6	2.4	7.0	11.5	1.5	2.8
1800 x 1300	1.0	1.7	1.3	2.1	1.5	2.6	1.7	2.6	7.5	12.3	1.5	3.0
1950 x 1320	1.1	1.8	1.4	2.3	1.6	2.8	1.8	2.8	8.0	13.2	1.8	3.3
2100 x 1450	1.1	1.9	1.4	2.4	1.7	2.9	2.0	3.0	8.5	14.0	1.8	3.5
CSPA 75 mm x 25 mm CORRUGATIONS												
1520 x 1170	1.0	1.6	1.2	2.1	1.5	2.4	1.7	2.5	7.3	11.9	1.5	3.0
1670 x 1300	1.1	1.8	1.3	2.2	1.5	2.6	1.8	2.8	7.9	12.8	1.8	3.3
1850 x 1400	1.1	1.8	1.4	2.3	1.7	2.8	2.0	3.0	8.4	13.7	1.8	3.5
2050 x 1500	1.1	1.9	1.5	2.4	1.7	2.9	2.1	3.1	8.9	14.4	2.0	3.8
2200 x 1620	1.2	2.1	1.5	2.6	1.8	3.1	2.2	3.4	9.4	15.4	2.0	4.0
2400 x 1720	1.3	2.1	1.6	2.7	1.9	3.2	2.4	3.6	9.9	16.3	2.3	4.3
2600 x 1820	1.4	2.3	1.7	2.8	2.0	3.4	2.5	3.9	10.5	17.3	2.3	4.8
2840 x 1920	1.4	2.4	1.8	3.0	2.1	3.6	2.7	4.1	11.0	18.2	2.5	5.0
2970 x 2020	1.5	2.5	1.8	3.1	2.1	3.7	2.8	4.4	11.5	19.2	2.8	5.3
3240 x 2120	1.5	2.7	1.9	3.3	2.2	3.9	3.0	4.6	12.1	20.2	2.8	5.5
3470 x 2220	1.6	2.8	2.0	3.4	2.3	4.1	3.1	4.8	12.7	21.2	3.0	6.0
3600 x 2320	1.7	2.9	2.1	3.5	2.4	4.2	3.2	5.0	13.2	22.1	3.0	6.3

NOTES:

1. CONCRETE EDGE PROTECTION IS STANDARD FOR METAL CULVERT INLET AND OUTLET PROTECTION. CULVERT RIPRAP IS ONLY USED IN SPECIAL CIRCUMSTANCES. QUANTITIES ARE BASED ON A THICKNESS OF 2 FT. [600] AND ARE PROPORTIONED WHEN A DIFFERENT THICKNESS IS SPECIFIED.

2. GRANULAR BEDDING QUANTITIES FOR METAL PIPES ARE BASED ON BEDDING DETAILS SHOWN ON DTL. DWG. NO. 603-19 WITH A WIDTH EQUAL TO (DIAMETER OR SPAN) + 4 FT. [1200] + (2 TIMES CORRUGATION DEPTH) AND A DEPTH EQUAL TO 1 FT. [300] + "X" + (CORRUGATION DEPTH). TO COMPUTE THE TOTAL BEDDING QUANTITY MULTIPLY BY (LENGTH OF PIPE MINUS 1.3 FT. [0.40 m]). EXTEND BEDDING TO BACK OF CUTOFF WALLS.

3. SEE DTL. DWG. NO. 603-32 AND 603-34 FOR "X" DIMENSIONS OF METAL PIPES.

4. FOR PIPES WITH SKEW BEVEL ENDS - DIVIDE THE QUANTITIES SHOWN BY COSINE OF SKEW ANGLE.

UNITS SHOWN IN BRACKETS [] ARE METRIC AND ARE IN MILLIMETERS (mm) UNLESS OTHER UNITS ARE SHOWN.

DETAILED DRAWING

REFERENCE
STANDARD SPEC.
SECTION 552,603,613

DWG. NO.
552-08

CONCRETE, RIPRAP AND GRANULAR BEDDING MATERIAL QUANTITIES FOR SING. AND DBL. CULVERT INSTALLATION

MDT MONTANA DEPARTMENT OF TRANSPORTATION