ADVERTISED COPY

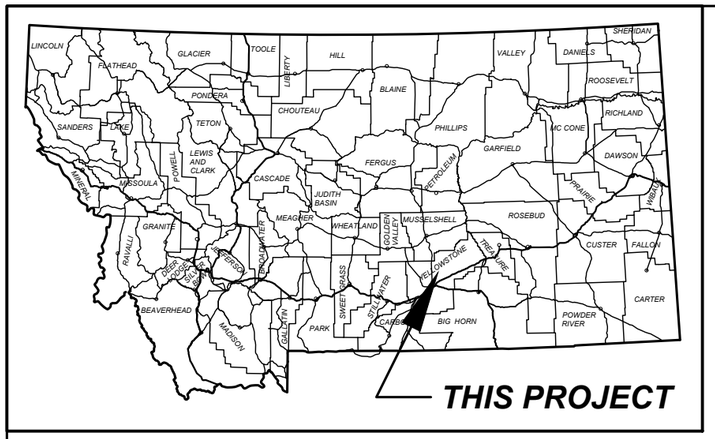

MONTANA DEPARTMENT OF TRANSPORTATION

FEDERAL AID PROJECT HSIP STWD(817)

ROADWAY & ROADSIDE SAFETY IMPROVEMENTS

SF 189 SOUTH D5 SAFETY IMPRV

CARBON, STILLWATER, & YELLOWSTONE

LENGTH N/A MILES

SITE 15
L-56-1324 / S 72ND ST W
C226028 - RP 0.000 TO RP 0.200
S-532 / KING AVE W
C000532 - RP 13.350 TO RP 13.750
L-56-530 / S 72ND ST W
C056530 - RP 4.950 TO RP 5.150
INTERSECTION SIGNING

SITE 11
L-56-530 / S 72ND ST W
C056530 - RP 3.948 TO RP 4.348
L-56-526 / HESPER RD
C000679 - RP 5.195 TO RP 5.595
INTERSECTION SIGNING, LIGHTING

SITE 12
L-56-526 / HESPER RD
C000679 - RP 4.220 TO RP 4.620
L-56-507 / S 64TH ST W
C056507 - RP 6.741 TO RP 7.141
INTERSECTION SIGNING, LIGHTING

SITE 1
SEC 20, T2S, R20E
S-306 / RAPELJE RD
C000306 - RP 1.095 TO RP 1.295
SIGNING, LIGHTING, RUMBLE STRIPS

SITE 18
SEC 07, T2S, R24E
19TH AVE / OLD US 10
C105208 - RP 0.400 TO RP 0.464
SIGNING, FLASHER

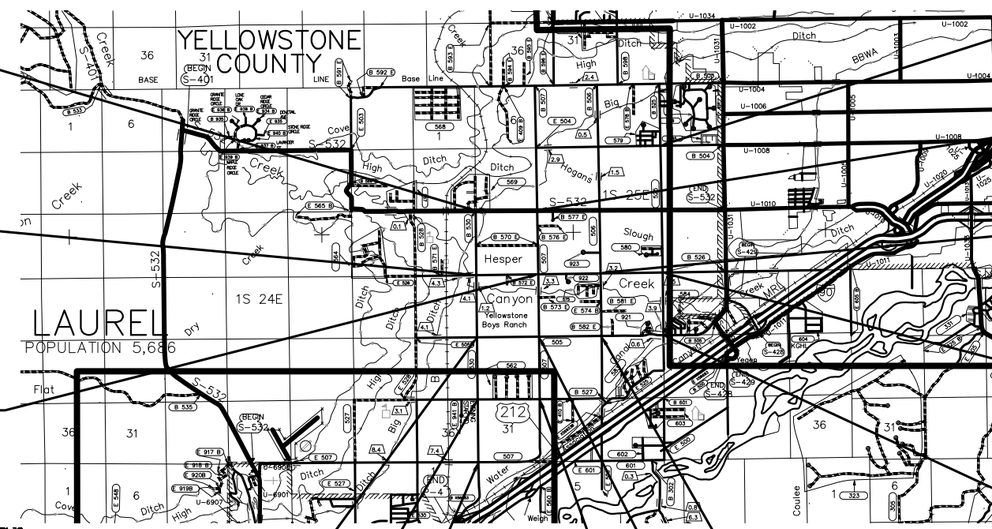

SITE 17 - BY OTHERS
L-56-525 / S 48TH ST W
C224862 - RP 1.799 TO RP 2.199
S-532 / KING AVE W
C000532 - RP 16.361 TO RP 16.761
INTERSECTION SIGNING

SITE 16
L-56-507 / S 64TH ST W
C056507 - RP 7.744 TO RP 8.144
S-532 / KING AVE W
C000532 - RP 14.115 TO RP 14.515
INTERSECTION SIGNING, LIGHTING

SITE 13 - BY OTHERS
L-56-506 / S 56TH ST W
C056506 - RP 2.800 TO RP 3.200
L-56-526 / HESPER RD
C000679 - RP 3.223 TO RP 3.623
INTERSECTION SIGNING

SITE 14 - BY OTHERS
L-56-526 / HESPER RD
C000679 - RP 2.224 TO RP 2.624
L-56-525 / S 48TH ST W
C224862 - RP 2.799 TO RP 3.199
INTERSECTION SIGNING

SITE 10
L-56-505 / NEIBAUER RD
C056505 - RP 0.739 TO RP 1.139
L-56-525 / S 48TH ST W
C224862 - RP 3.801 TO RP 4.201
INTERSECTION SIGNING, FLASHER

SITE 9 - BY OTHERS
L-56-505 / NEIBAUER RD
C056505 - RP 1.740 TO RP 2.140
L-56-506 / S 56TH ST W
C056506 - RP 3.802 TO RP 4.202
INTERSECTION SIGNING

SITE 7
L-56-505 / NEIBAUER RD
C056505 - RP 3.708 TO RP 4.108
L-56-530 / S 72ND ST W
C056530 - RP 2.950 TO RP 3.350
INTERSECTION SIGNING

SITE 8
L-56-505 / NEIBAUER RD
C056505 - RP 2.738 TO RP 3.138
L-56-507 / S 64TH ST W
C056507 - RP 5.740 TO RP 6.140
INTERSECTION SIGNING

SITE 5
L-56-527 / DANFORD RD
C056527 - RP 1.765 TO RP 2.165
L-56-530 / S 72ND ST W
C056530 - RP 1.952 TO RP 2.352
INTERSECTION SIGNING

SITE 6
L-56-507 / S 64TH ST W
C056507 - RP 4.742 TO RP 5.142
L-56-527 / DANFORD RD
C056527 - RP 0.804 TO RP 1.204
INTERSECTION SIGNING

SITE 4
L-56-530 / S 72ND ST W
C056530 - RP 0.948 TO RP 1.348
L-56-507 / LAUREL AIRPORT RD
C056507 - RP 2.802 TO RP 3.202
INTERSECTION SIGNING, LIGHTING

SITE 3
SEC 23, T4S, R18E
S-419 / NYE RD
C000419
RP 0.000 TO RP 3.098
RUMBLE STRIPS

SITE 2
SEC 36, T7S, R20E
S-308
C000308
RP 2.400 TO RP 3.000
SIGNING, FLASHERS

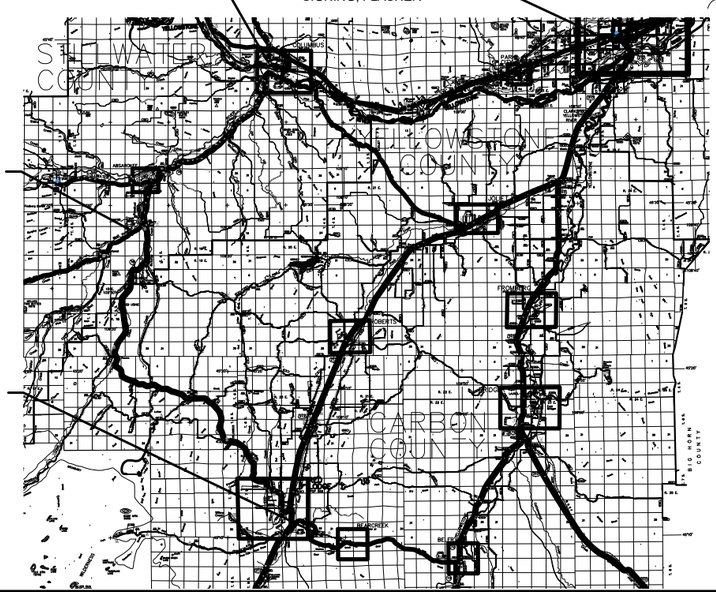

APPROVED
By Riley C. Lubbers, PE at 9:49 am, Mar 07, 2024

HDR

BY _____

DATE _____

MONTANA
RILEY C. LUBBERS
No.72244PE
LICENSED PROFESSIONAL ENGINEER

MONTANA
DEPARTMENT OF TRANSPORTATION

RECEIVED :

BY _____ _____
TRAFFIC & SAFETY ENGINEER DATE

SHEET NO.
1

TITLE SHEET

PROJECT NAME: SF 189 SOUTH D5 SAFETY IMPRV
COUNTY: CARBON, STILLWATER, & YELLOWSTONE
PROJECT ID: HSIP STWD(817)
UPN: 9912000

CHECKED BY	RCL	03/04/2024
REVIEWED BY	LJF	03/01/2024
DESIGNED BY	SMM	02/29/2024

9912000RDTTLZ01.DWG

MONTANA Department of Transportation

SIGNING PLANS

3/6/2024 9:27 AM

ADVERTISED COPY

TABLE OF CONTENTS

ROAD PLANS	SHEET NO.
TITLE SHEET	1
TABLE OF CONTENTS	2
NOTES	2
SUMMARIES	3
PAVEMENT MARKINGS	3
RUMBLE STRIPS	3
DETAILS	4

SIGNING PLANS	
SUMMARY	S1
SPECIFICATIONS	S2-S10
PLANS	S11-S24

ELECTRICAL PLANS	
SUMMARY	E1
DETAILS	E2-E8
PLANS	E9-E15

NOTES

UTILITIES

CALL THE UTILITIES UNDERGROUND LOCATION CENTER (811) OR OTHER NOTIFICATION SYSTEM FOR THE MARKING AND LOCATION OF ALL LINES AND SERVICES BEFORE EXCAVATING. ALL CLEARANCES OR DEPTHS PROVIDED FOR UTILITIES ARE FROM EXISTING GROUND LINE.

BASIS OF PLAN QUANTITIES

EMULSIFIED ASPHALT - FOG SEAL (RUMBLE STRIPS) = 0.10 GAL. PER SQ.YARD (UNDILUTED)

WETLANDS

WETLANDS MAY EXIST ADJACENT TO THE ROADWAY AND BEYOND THE PROJECT LIMITS. ANY ACTION IMPACTING WETLAND AREAS IS THE RESPONSIBILITY OF THE CONTRACTOR.

SHEET NO.
2

TABLE OF CONTENTS & NOTES

PROJECT NAME
SF 189 SOUTH D5 SAFETY IMPRV
COUNTY
CARBON, STILLWATER, & YELLOWSTONE
PROJECT ID
HSIP STWD(817)
UPN
9912000

MONTANA
Department of Transportation

SIGNING PLANS

CHECKED BY	RCL	03/04/2024
REVIEWED BY	LJF	03/01/2024
DESIGNED BY	SMM	02/29/2024

9912000RDTTLZ01.DWG

3/6/2024 9:27 AM

ADVERTISED COPY

SUMMARY

PAVEMENT MARKINGS

ITEM	UNIT	INTERIM APPLICA-TION #	FINAL APPLICA-TION	TOTAL
WORDS & SYMBOLS - WHITE PAINT	gallon	52		52
WORDS & SYMBOLS - WHITE EPOXY	gallon		34	34

BASED ON 2 APPLICATIONS.

RUMBLE STRIPS

RP		miles	lump sum	gals	REMARKS
		RUMBLE STRIPS		EMULSIFIED ASPHALT FOG SEAL #	
FROM	TO	CONTIN-UOUS	TRANSVERSE		
1.130	1.155		1.0	5	TRANSVERSE RUMBLE STRIPS - SITE 1
0.000	3.141	6.3		740	SHOULDER RUMBLE STRIPS - SITE 3
SUBTOTAL		6.3	1.0	745	
TOTAL		6.3	1.0	~	

FOR INFORMATION ONLY, INCLUDE IN THE COST OF RUMBLE STRIPS

SHEET NO.
3

SUMMARY

PROJECT NAME
SF 189 SOUTH D5 SAFETY IMPRV

COUNTY
CARBON, STILLWATER, & YELLOWSTONE

PROJECT ID
HSIP STWD(817)

UPN
9912000

CHECKED BY	RCL	03/04/2024
REVIEWED BY	LJF	03/01/2024
DESIGNED BY	SMM	02/29/2024

9912000RDSUMZ01.DWG

MONTANA
Department of Transportation

ROAD PLANS

3/5/2024 9:26 AM

ADVERTISED COPY

NARROW SHOULDER INSTALLATION (ASPHALT PAVEMENT)

DETAIL MODIFIES MDT STANDARD DETAIL 411-03 FOR SITE SPECIFIC CONDITIONS

SITE 3

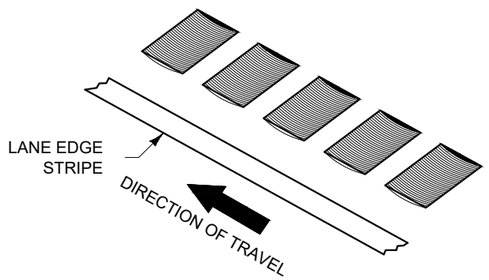

ISOMETRIC VIEW

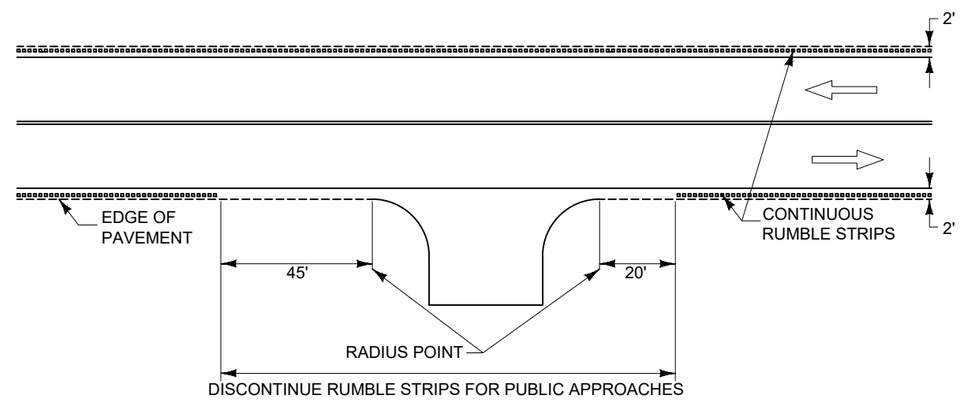

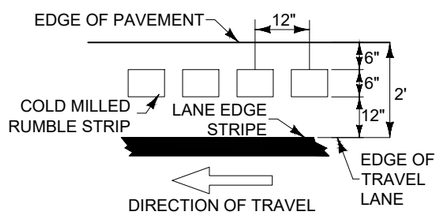

	DEPTH	RADIUS	SPAN
ASPHALT	1/2" TO 3/4"	12" MAX.	6 7/8" TO 8 3/8"

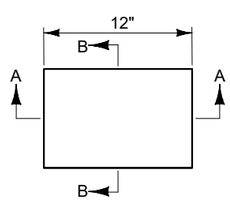

PLAN

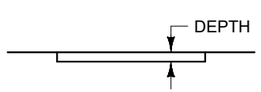

SECTION A-A

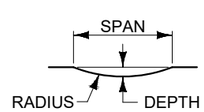

SECTION B-B

NOTES

1. DO NOT INSTALL RUMBLE STRIPS OVER CONCRETE BRIDGE DECKS OR WHERE OBSTACLES, SUCH AS CONCRETE BARRIER RAIL, PREVENT PROPER PLACEMENT.
2. IF SHOULDER IS LESS THAN 2' WIDE, CONSULT WITH PROJECT MANAGER.
3. DISCONTINUE CONTINUOUS RUMBLE STRIPS IN FRONT OF GUARDRAIL.
4. CONTINUE RUMBLE STRIPS ALONG THE FULL LENGTH INCLUDING ANY TAPERS, OF MAILBOX TURNOUTS, SCENIC TURNOUTS, HISTORIC MARKER TURNOUTS, FIELD FARM APPROACHES, ETC.

SHEET NO.
4

RUMBLE STRIP DETAIL

PROJECT NAME: SF 189 SOUTH D5 SAFETY IMPRV
COUNTY: CARBON, STILLWATER, & YELLOWSTONE
PROJECT ID: HSIP STWD(817)
UPN: 9912000

CHECKED BY	RCL	03/04/2024
REVIEWED BY	LJF	03/01/2024
DESIGNED BY	SMM	02/29/2024

9912000RDDETZ01.DWG

MONTANA Department of Transportation

ROAD PLANS

3/5/2024 9:26 AM

ADVERTISED COPY

SUMMARY
SIGNING & DELINEATION QUANTITIES

9912000SISUMZ01.

MATERIAL	TOTALS	UNIT
SIGNS - ALUM REFL SHEET XI	2,615.5	SQFT
SIGNS - ALUM REFL SHEET INCREMENT XI	21.0	SQFT
REMOVE SIGN	72	EACH
POSTS-TUBULAR STEEL	13,217	LB
POLES - TREATED WOOD 5 IN	32	LF
PANEL DELINEATOR DESIGN A	96	EACH
RETRO REFL STRIP-RED 4 X 60	52	EACH
FRANG SIGN POST BKWY - 3 IN RD	64	EACH
FRANG SIGN POST BKWY - 3.5 IN RD	29	EACH
FRANG SIGN POST BKWY - 4 IN RD	32	EACH

SHEET NO.
S1

SUMMARY

PROJECT NAME
SF 189 SOUTH D5 SAFETY IMPRV
COUNTY
CARBON, STILLWATER, & YELLOWSTONE
PROJECT ID
HSIP STWD(817)
UPN
9912000

CHECKED BY	RCL	03/04/2024
REVIEWED BY	LJF	03/01/2024
DESIGNED BY	SMM	02/29/2024

9912000SISUMZ01.DWG

MONTANA
Department of Transportation

SIGNING PLANS

3/7/2024 9:27 AM

ADVERTISED COPY

SIGN LOCATION AND SPECIFICATION

	Lt. / Rt.	STATION / M.P.	RAMP NO.	SIGN NO.	PANEL SIZE	FEET: CLEARANCE	FEET: SIGN SUPPORT SPACING	TYPE OF SUPPORT	CANTILEVER	FEET: SUPPORT LENGTH (ESTIMATED)	FEET: SUPPORT LENGTH (INSTALLED)	FEET: MOUNTING HEIGHT	FEET: FOUNDATION DEPTH	SIGN PANEL (SQ. FT.): SHEET ALUMINUM XI	SIGN PANEL (SQ. FT.): ALUM. SHEET INCREMENT XI	SIGN PANEL (SQ. FT.): ALUMINUM SHT OVERLAY	TIMBER POLE (LINEAR FT.): 4" TOP DIA.	TIMBER POLE (LINEAR FT.): 5" TOP DIA.	TIMBER POLE (LINEAR FT.): 6" TOP DIA.	STEEL POST (LBS.): ROUND TUBULAR	STEEL POST (LBS.): SQUARE TUBULAR	STEEL POST (LBS.): STRUCTURAL STEEL	STEEL POST (LBS.): "U" POST	BREAKAWAY	SIGNS: REMOVE	SIGNS: RESET	GUIDE: REMOVE	GUIDE: RESET	REMARKS
SITE 1	LT.	1A		R1-1 W4-4P	48X48 48X24	6-0		4" DIA. PIPE		11-1		6-1	3-0	13.4 8.0						120				■	1				REPLACE, R1-1 = STOP NEW W4-4P = CROSS TRAFFIC DOES NOT STOP
	LT.	1B		W3-1 W4-4P	48X48 48X24	10-0		4" DIA. PIPE		13-6		6-1	3-0	16.0 8.0						146				■	1				REPLACE, W3-1 = STOP AHEAD NEW W4-4P = CROSS TRAFFIC DOES NOT STOP
		1C	RT.	W3-1 W4-4P	48X48 48X24	10-0		4" DIA. PIPE		13-6		6-1	3-0	16.0 8.0						146				■					NEW, W3-1 = STOP AHEAD W4-4P = CROSS TRAFFIC DOES NOT STOP
		1D	RT.	R1-1 W4-4P	48X48 48X24	6-0		4" DIA. PIPE		11-1		6-1	3-0	13.4 8.0						120				■					NEW, R1-1 = STOP W4-4P = CROSS TRAFFIC DOES NOT STOP
		1E	RT.	W1-7a	72X42	10-0	3-8	5" DIA. POLE		X = 14-6 Y = 14-6		7-0	3-6		21.0			32						X					NEW W1-7a, SEE SIGN DETAIL SHEET (S11) FOR ADDITIONAL INFORMATION
				W1-8L (3) W1-8R (3)	REMOVE REMOVE																				1 1				REMOVE, W1-8L (3) REMOVE, W1-8R (3)
SITE 2		2A	RT.	W1-11R W13-1	48X48 24X24	SEE ELECTRICAL PLANS								16.0 4.0											1				REPLACE, W1-11R = HAIRPIN CURVE RIGHT W13-1 = 35 MPH
		2B	RT.	W1-11L W13-1	48X48 24X24									16.0 4.0											1				R.S.F.O., W1-11L = HAIRPIN CURVE LEFT W13-1 = 30 MPH
	LT.	2C		W1-11L	48X48	SEE ELECTRICAL PLANS								16.0											1				REPLACE, W1-11L = HAIRPIN CURVE LEFT
	LT.	2D		D6-6L	USE AS IS																								USE AS IS, D6-6L = SCENIC TURNOUT LEFT
	LT.	2E		W1-11R	48X48	SEE ELECTRICAL PLANS								16.0															NEW, W1-11R = HAIRPIN CURVE RIGHT
	LT.	2F		W1-11L W13-1	48X48 24X24									16.0 4.0											1				R.S.F.O., W1-11R = HAIRPIN CURVE RIGHT W13-1 = 30 MPH
SITE 4	LT.	4A		W3-1	48X48	10-0		3" DIA. PIPE		12-6		5-0	3-0	16.0						95				■					NEW, W3-1 = STOP AHEAD
	LT.	4B		R1-1 W4-4P	48X48 48X24	6-0		4" DIA. PIPE		11-1		6-1	3-0	13.4 8.0						120				■					NEW, R1-1 = STOP W4-4P = CROSS TRAFFIC DOES NOT STOP
	LT.	4C		W2-1 W16-8aP	48X48 30X15	10-0		3.5" DIA. PIPE		12-9		5-7	3-0	16.0 3.2						117				■	1				REPLACE, W2-1 = CROSS ROAD W16-8aP = LAUREL AIRPORT RD
		4D	RT.	W2-1 W16-8aP	48X48 30X15	10-0		3.5" DIA. PIPE		12-9		5-7	3-0	16.0 3.2						117				■					NEW, W2-1 = CROSS ROAD W16-8aP = LAUREL AIRPORT RD
	LT.	4E		R1-1 W4-4P	48X48 48X24	6-0		4" DIA. PIPE		11-1		6-1	3-0	13.4 8.0						120				■	1				REPLACE, R1-1 = STOP W4-4P = CROSS TRAFFIC DOES NOT STOP
	LT.	4F		W3-1	48X48	10-0		3" DIA. PIPE		12-6		5-0	3-0	16.0						95				■	1				REPLACE, W3-1 = STOP AHEAD

R.S.F.O. = REPLACE SIGN FACE ONLY

X = STANDARD BREAKAWAY DEVICE:
-FOR WOOD POST SEE DETAILED DRAWING 619-20
-FOR STRUCTURAL STEEL SEE DETAILED DRAWING 619-13

■ = FRANGIBLE SIGN POST BREAKAWAY DEVICE REQUIRED.

NOTES:
- LT. AND RT. SIGN ORIENTATION BASED FROM WEST TO EAST AND SOUTH TO NORTH.
- MOUNTING HEIGHT MEASURED FROM THE BOTTOM OF THE PRIMARY SIGN.

SHEET NO.
S2

SPECIFICATIONS

PROJECT NAME: SF 189 SOUTH D5 SAFETY IMPRV
COUNTY: CARBON, STILLWATER, & YELLOWSTONE
PROJECT ID: HSIP STWD(817)
UPN: 9912000

CHECKED BY	RCL	03/04/2024
REVIEWED BY	LJF	03/01/2024
DESIGNED BY	SMM	02/29/2024

9912000SISUMZ01.DWG

MONTANA Department of Transportation

SIGNING PLANS

3/7/2024 9:27 AM

ADVERTISED COPY

SIGN LOCATION AND SPECIFICATION

	Lt.	STATION / M.P.	Rt.	RAMP NO.	SIGN NO.	PANEL SIZE	FEET CLEARANCE	FEET SIGN SUPPORT SPACING	TYPE OF SUPPORT	CANTILEVER	FEET SUPPORT LENGTH (ESTIMATED)	FEET SUPPORT LENGTH (INSTALLED)	FEET MOUNTING HEIGHT	FEET FOUNDATION DEPTH	SIGN PANEL (SQ. FT.) SHEET ALUMINUM XI	SIGN PANEL (SQ. FT.) ALUM. SHEET INCREMENT XI	SIGN PANEL (SQ. FT.) ALUMINUM SHT OVERLAY	TIMBER POLE (LINEAR FT.) 4" TOP DIA.	TIMBER POLE (LINEAR FT.) 5" TOP DIA.	TIMBER POLE (LINEAR FT.) 6" TOP DIA.	STEEL POST (LBS.) ROUND TUBULAR	STEEL POST (LBS.) SQUARE TUBULAR	STEEL POST (LBS.) STRUCTURAL STEEL	STEEL POST (LBS.) "U" POST	BREAKAWAY	SIGNS REMOVE	SIGNS RESET	GUIDE REMOVE	GUIDE RESET	REMARKS
		4G	RT.		W3-1	48X48	10-0		3" DIA. PIPE		12-6		5-0	3-0	16.0						95				■					NEW, W3-1 = STOP AHEAD
		4H	RT.		R1-1 W4-4P	48X48 48X24	6-0		4" DIA. PIPE		11-1		6-1	3-0	13.4 8.0						120				■					NEW, R1-1 = STOP W4-4P = CROSS TRAFFIC DOES NOT STOP
		4I	RT.		W2-1 W16-8aP	48X48 30X15	10-0		3.5" DIA. PIPE		12-9		5-7	3-0	16.0 3.2						117				■	1				REPLACE, W2-1 = CROSS ROAD W16-8aP = LAUREL AIRPORT RD
	LT.	4J			W2-1 W16-8aP	48X48 30X15	10-0		3.5" DIA. PIPE		12-9		5-7	3-0	16.0 3.2						117				■					NEW, W2-1 = CROSS ROAD W16-8aP = LAUREL AIRPORT RD
		4K	RT.		R1-1 W4-4P D3-1 D3-1	48X48 48X24 42X10 42X10	6-0		4" DIA. PIPE		13-6		6-1	3-0	13.4 8.0 2.9 2.9						146				■	1				REPLACE, R1-1 = STOP W4-4P = CROSS TRAFFIC DOES NOT STOP D3-1 = S 72ND ST W
					D3-2 D3-2	36X18 36X18									4.5 4.5															D3-2 = LAUREL AIRPORT RD
		4L	RT.		W3-1	48X48	10-0		3" DIA. PIPE		12-6		5-0	3-0	16.0						95				■	1				REPLACE, W3-1 = STOP AHEAD
SITE 5	LT.	5A			W3-1	48X48	10-0		3" DIA. PIPE		12-6		5-0	3-0	16.0						95				■					NEW, W3-1 = STOP AHEAD
	LT.	5B			R1-1 W4-4P	48X48 48X24	6-0		4" DIA. PIPE		11-1		6-1	3-0	13.4 8.0						120				■					NEW, R1-1 = STOP W4-4P = CROSS TRAFFIC DOES NOT STOP
	LT.	5C			W2-1 W16-8P	48X48 30X8	10-0		3.5" DIA. PIPE		12-6		5-0	3-0	16.0 1.7						115				■	1				REPLACE, W2-1 = CROSS ROAD W16-8P = DANFORD RD
		5D	RT.		W2-1 W16-8P	48X48 30X8	10-0		3.5" DIA. PIPE		12-6		5-0	3-0	16.0 1.7						115				■					NEW, W2-1 = CROSS ROAD W16-8P = DANFORD RD
	LT.	5E			R1-1 W4-4P	48X48 48X24	6-0		4" DIA. PIPE		11-1		6-1	3-0	13.4 8.0						159				■	1				REPLACE, R1-1 = STOP W4-4P = CROSS TRAFFIC DOES NOT STOP
	LT.	5F			W3-1	48X48	10-0		3" DIA. PIPE		12-6		5-0	3-0	16.0						95				■	1				REPLACE, W3-1 = STOP AHEAD
		5G	RT.		W3-1	48X48	10-0		3" DIA. PIPE		12-6		5-0	3-0	16.0						95				■					NEW, W3-1 = STOP AHEAD
		5H	RT.		R1-1 W4-4P	48X48 48X24	6-0		4" DIA. PIPE		11-1		6-1	3-0	13.4 8.0						120				■					NEW, R1-1 = STOP W4-4P = CROSS TRAFFIC DOES NOT STOP
		5I	RT.		W2-1 W16-8P	48X48 30X8	10-0		3.5" DIA. PIPE		12-6		5-0	3-0	16.0 1.7						115				■	1				REPLACE, W2-1 = CROSS ROAD W16-8P = DANFORD RD
	LT.	5J			W2-1 W16-8P	48X48 30X8	10-0		3.5" DIA. PIPE		12-6		5-0	3-0	16.0 1.7						115				■					NEW, W2-1 = CROSS ROAD W16-8P = DANFORD RD

R.S.F.O. = REPLACE SIGN FACE ONLY

■ = FRANGIBLE SIGN POST
BREAKAWAY DEVICE REQUIRED.

NOTES:
- LT. AND RT. SIGN ORIENTATION BASED FROM WEST TO EAST AND SOUTH TO NORTH.
- MOUNTING HEIGHT MEASURED FROM THE BOTTOM OF THE PRIMARY SIGN.

SHEET NO.
S3

SPECIFICATIONS

PROJECT NAME: SF 189 SOUTH D5 SAFETY IMPRV
COUNTY: CARBON, STILLWATER, & YELLOWSTONE
PROJECT ID: HSIP STWD(817)
UPN: 9912000

CHECKED BY	RCL	03/04/2024
REVIEWED BY	LJF	03/01/2024
DESIGNED BY	SMM	02/29/2024

9912000SISUMZ01.DWG

MONTANA Department of Transportation

SIGNING PLANS

3/7/2024 9:27 AM

ADVERTISED COPY

SIGN LOCATION AND SPECIFICATION

	Lt.	STATION / M.P.	Rt.	RAMP NO.	SIGN NO.	PANEL SIZE	FEET: CLEARANCE	FEET: SIGN SUPPORT SPACING	TYPE OF SUPPORT	CANTILEVER	FEET: SUPPORT LENGTH (ESTIMATED)	FEET: SUPPORT LENGTH (INSTALLED)	FEET: MOUNTING HEIGHT	FEET: FOUNDATION DEPTH	SIGN PANEL (SQ. FT.): SHEET ALUMINUM XI	SIGN PANEL (SQ. FT.): ALUM. SHEET INCREMENT XI	SIGN PANEL (SQ. FT.): ALUMINUM SHT OVERLAY	TIMBER POLE (LINEAR FT.): 4" TOP DIA.	TIMBER POLE (LINEAR FT.): 5" TOP DIA.	TIMBER POLE (LINEAR FT.): 6" TOP DIA.	STEEL POST (LBS.): ROUND TUBULAR	STEEL POST (LBS.): SQUARE TUBULAR	STEEL POST (LBS.): STRUCTURAL STEEL	STEEL POST (LBS.): "U" POST	BREAKAWAY	SIGNS: REMOVE	SIGNS: RESET	GUIDE: REMOVE	GUIDE: RESET	REMARKS
		5K	RT.		R1-1 W4-4P	48X48 48X24	6-0		4" DIA. PIPE		13-0		6-1	3-0	13.4 8.0						141				■	1				REPLACE, R1-1 = STOP W4-4P = CROSS TRAFFIC DOES NOT STOP
					D3-1 D3-1	42X10 42X10									2.9 2.9															D3-1 = S 72ND ST W
					D3-1 D3-1	42X10 42X10									2.9 2.9															D3-1 = DANFORD RD
		5L	RT.		W3-1	48X48	10-0		3" DIA. PIPE		12-6		5-0	3-0	16.0						95				■	1				REPLACE, W3-1 = STOP AHEAD
SITE 6	LT.	6A			W3-1	48X48	10-0		3" DIA. PIPE		12-6		5-0	3-0	16.0						95				■					NEW, W3-1 = STOP AHEAD
	LT.	6B			R1-1 W4-4P	48X48 48X24	6-0		4" DIA. PIPE		11-1		6-1	3-0	13.4 8.0						120				■					NEW, R1-1 = STOP W4-4P = CROSS TRAFFIC DOES NOT STOP
	LT.	6C			W2-1 W16-8P	48X48 30X8	10-0		3.5" DIA. PIPE		12-6		5-0	3-0	16.0 1.7						115				■	1				REPLACE, W2-1 = CROSS ROAD W16-8P = DANFORD RD
		6D	RT.		W2-1 W16-8P	48X48 30X8	10-0		3.5" DIA. PIPE		12-6		5-0	3-0	16.0 1.7						115				■					NEW, W2-1 = CROSS ROAD W16-8P = DANFORD RD
	LT.	6E			R1-1 W4-4P	48X48 48X24	6-0		4" DIA. PIPE		11-1		6-1	3-0	13.4 8.0						120				■	1				REPLACE, R1-1 = STOP W4-4P = CROSS TRAFFIC DOES NOT STOP
	LT.	6F			W3-1	48X48	10-0		3" DIA. PIPE		12-6		5-0	3-0	16.0						95				■	1				REPLACE, W3-1 = STOP AHEAD
		6G	RT.		W3-1	48X48	10-0		3" DIA. PIPE		12-6		5-0	3-0	16.0						95				■					NEW, W3-1 = STOP AHEAD
		6H	RT.		R1-1 W4-4P	48X48 48X24	6-0		4" DIA. PIPE		11-1		6-1	3-0	13.4 8.0						120				■					NEW, R1-1 = STOP W4-4P = CROSS TRAFFIC DOES NOT STOP
		6I	RT.		W2-1 W16-8P	48X48 30X8	10-0		3.5" DIA. PIPE		12-6		5-0	3-0	16.0 1.7						115				■	1				REPLACE, W2-1 = CROSS ROAD W16-8P = DANFORD RD
	LT.	6J			W2-1 W16-8P	48X48 30X8	10-0		3.5" DIA. PIPE		12-6		5-0	3-0	16.0 1.7						115				■					NEW, W2-1 = CROSS ROAD W16-8P = DANFORD RD
		6K	RT.		R1-1 W4-4P	48X48 48X24	6-0		4" DIA. PIPE		13-0		6-1	3-0	13.4 8.0						141				■	1				REPLACE, R1-1 = STOP W4-4P = CROSS TRAFFIC DOES NOT STOP
					D3-1 D3-1	42X10 42X10									2.9 2.9															D3-1 = S 64TH ST W
					D3-1 D3-1	42X10 42X10									2.9 2.9															D3-1 = DANFORD RD
		6L	RT.		W3-1	48X48	10-0		3" DIA. PIPE		12-6		5-0	3-0	16.0						95				■	1				REPLACE, W3-1 = STOP AHEAD
SITE 7	LT.	7A			W3-1	48X48	10-0		3" DIA. PIPE		12-6		5-0	3-0	16.0						95				■					NEW, W3-1 = STOP AHEAD
	LT.	7B			R1-1 W4-4P	48X48 48X24	6-0		4" DIA. PIPE		11-1		6-1	3-0	13.4 8.0						120				■					NEW, R1-1 = STOP W4-4P = CROSS TRAFFIC DOES NOT STOP

R.S.F.O. = REPLACE SIGN FACE ONLY

■ = FRANGIBLE SIGN POST
BREAKAWAY DEVICE REQUIRED.

NOTES:
- LT. AND RT. SIGN ORIENTATION BASED FROM WEST TO EAST AND SOUTH TO NORTH.
- MOUNTING HEIGHT MEASURED FROM THE BOTTOM OF THE PRIMARY SIGN.

SHEET NO.
S4

SPECIFICATIONS

PROJECT NAME: SF 189 SOUTH D5 SAFETY IMPRV
COUNTY: CARBON, STILLWATER, & YELLOWSTONE
PROJECT ID: HSIP STWD(817)
UPN: 9912000

CHECKED BY	RCL	03/04/2024
REVIEWED BY	LJF	03/01/2024
DESIGNED BY	SMM	02/29/2024

9912000SIUMZ01.DWG

MONTANA Department of Transportation

SIGNING PLANS

3/7/2024 9:27 AM

ADVERTISED COPY

SIGN LOCATION AND SPECIFICATION

Lt.	STATION / M.P.	Rt.	RAMP NO.	SIGN NO.	PANEL SIZE	FEET: CLEARANCE	FEET: SIGN SUPPORT SPACING	TYPE OF SUPPORT	CANTILEVER	FEET: SUPPORT LENGTH (ESTIMATED)	FEET: SUPPORT LENGTH (INSTALLED)	FEET: MOUNTING HEIGHT	FEET: FOUNDATION DEPTH	SIGN PANEL (SQ. FT.): SHEET ALUMINUM XI	SIGN PANEL (SQ. FT.): ALUM. SHEET INCREMENT XI	SIGN PANEL (SQ. FT.): ALUMINUM SHT OVERLAY	TIMBER POLE (LINEAR FT.): 4" TOP DIA.	TIMBER POLE (LINEAR FT.): 5" TOP DIA.	TIMBER POLE (LINEAR FT.): 6" TOP DIA.	STEEL POST (LBS.): ROUND TUBULAR	STEEL POST (LBS.): SQUARE TUBULAR	STEEL POST (LBS.): STRUCTURAL STEEL	STEEL POST (LBS.): "U" POST	BREAKAWAY	SIGNS: REMOVE	SIGNS: RESET	GUIDE: REMOVE	GUIDE: RESET	REMARKS
LT.	7C			W2-1 W16-8P	48X48 30X8	10-0		3.5" DIA. PIPE		12-6		5-0	3-0	16.0 1.7						115				■	1				REPLACE, W2-1 = CROSS ROAD W16-8P = NBBAUER RD
	7D	RT.		W2-1 W16-8P	48X48 30X8	10-0		3.5" DIA. PIPE		12-6		5-0	3-0	16.0 1.7						115				■					NEW, W2-1 = CROSS ROAD W16-8P = NBBAUER RD
LT.	7E			R1-1 W4-4P	48X48 48X24	6-0		4" DIA. PIPE		11-1		6-1	3-0	13.4 8.0						120				■	1				REPLACE, R1-1 = STOP W4-4P = CROSS TRAFFIC DOES NOT STOP
LT.	7F			W3-1	48X48	10-0		3" DIA. PIPE		12-6		5-0	3-0	16.0						95				■	1				REPLACE, W3-1 = STOP AHEAD
	7G	RT.		W3-1	48X48	10-0		3" DIA. PIPE		12-6		5-0	3-0	16.0						95				■					NEW, W3-1 = STOP AHEAD
	7H	RT.		R1-1 W4-4P	48X48 48X24	6-0		4" DIA. PIPE		11-1		6-1	3-0	13.4 8.0						120				■					NEW, R1-1 = STOP W4-4P = CROSS TRAFFIC DOES NOT STOP
	7I	RT.		W2-1 W16-8P	48X48 30X8	10-0		3.5" DIA. PIPE		12-6		5-0	3-0	16.0 1.7						115				■	1				REPLACE, W2-1 = CROSS ROAD W16-8P = NBBAUER RD
LT.	7J			W2-1 W16-8P	48X48 30X8	10-0		3.5" DIA. PIPE		12-6		5-0	3-0	16.0 1.7						115				■					NEW, W2-1 = CROSS ROAD W16-8P = NBBAUER RD
	7K	RT.		R1-1 W4-4P	48X48 48X24	6-0		4" DIA. PIPE		13-0		6-1	3-0	13.4 8.0						141				■	1				REPLACE, R1-1 = STOP W4-4P = CROSS TRAFFIC DOES NOT STOP
				D3-1 D3-1	42X10 42X10									2.9 2.9															D3-1 = S 72ND ST W
				D3-1 D3-1	42X10 42X10									2.9 2.9															D3-1 = NEIBAUER RD
	7L	RT.		W3-1	48X48	10-0		3" DIA. PIPE		12-6		5-0	3-0	16.0						95				■	1				REPLACE, W3-1 = STOP AHEAD
SITE 8	8A			W3-1	48X48	10-0		3" DIA. PIPE		12-6		5-0	3-0	16.0						95				■					NEW, W3-1 = STOP AHEAD
LT.	8B			R1-1 W4-4P	48X48 48X24	6-0		4" DIA. PIPE		11-1		6-1	3-0	13.4 8.0						120				■					NEW, R1-1 = STOP W4-4P = CROSS TRAFFIC DOES NOT STOP
LT.	8C			W2-1 W16-8P	48X48 30X8	10-0		3.5" DIA. PIPE		12-6		5-0	3-0	16.0 1.7						115				■	1				REPLACE, W2-1 = CROSS ROAD W16-8P = NBBAUER RD
	8D	RT.		W2-1 W16-8P	48X48 30X8	10-0		3.5" DIA. PIPE		12-6		5-0	3-0	16.0 1.7						115				■					NEW, W2-1 = CROSS ROAD W16-8P = NBBAUER RD
LT.	8E			R1-1 W4-4P	48X48 48X24	6-0		4" DIA. PIPE		11-1		6-1	3-0	13.4 8.0						120				■	1				REPLACE, R1-1 = STOP W4-4P = CROSS TRAFFIC DOES NOT STOP
LT.	8F			W3-1	48X48	10-0		3" DIA. PIPE		12-6		5-0	3-0	16.0						95				■	1				REPLACE, W3-1 = STOP AHEAD
	8G	RT.		W3-1	48X48	10-0		3" DIA. PIPE		12-6		5-0	3-0	16.0						95				■					NEW, W3-1 = STOP AHEAD

R.S.F.O. = REPLACE SIGN FACE ONLY

■ = FRANGIBLE SIGN POST
BREAKAWAY DEVICE REQUIRED.

NOTES:
- LT. AND RT. SIGN ORIENTATION BASED FROM WEST TO EAST AND SOUTH TO NORTH.
- MOUNTING HEIGHT MEASURED FROM THE BOTTOM OF THE PRIMARY SIGN.

SHEET NO.
S5

SPECIFICATIONS

PROJECT NAME: SF 189 SOUTH D5 SAFETY IMPRV
COUNTY: CARBON, STILLWATER, & YELLOWSTONE
PROJECT ID: HSIP STWD(817)
UPN: 9912000

CHECKED BY	RCL	03/04/2024
REVIEWED BY	LJF	03/01/2024
DESIGNED BY	SMM	02/29/2024

9912000SISUMZ01.DWG

MONTANA Department of Transportation

SIGNING PLANS

3/7/2024 9:27 AM

ADVERTISED COPY

SIGN LOCATION AND SPECIFICATION

	Lt.	STATION / M.P.	Rt.	RAMP NO.	SIGN NO.	PANEL SIZE	FEET: CLEARANCE	FEET: SIGN SUPPORT SPACING	TYPE OF SUPPORT	CANTILEVER	FEET: SUPPORT LENGTH (ESTIMATED)	FEET: SUPPORT LENGTH (INSTALLED)	FEET: MOUNTING HEIGHT	FEET: FOUNDATION DEPTH	SIGN PANEL (SQ. FT.): SHEET ALUMINUM XI	SIGN PANEL (SQ. FT.): ALUM. SHEET INCREMENT XI	SIGN PANEL (SQ. FT.): ALUMINUM SHT OVERLAY	TIMBER POLE (LINEAR FT.): 4" TOP DIA.	TIMBER POLE (LINEAR FT.): 5" TOP DIA.	TIMBER POLE (LINEAR FT.): 6" TOP DIA.	STEEL POST (LBS.): ROUND TUBULAR	STEEL POST (LBS.): SQUARE TUBULAR	STEEL POST (LBS.): STRUCTURAL STEEL	STEEL POST (LBS.): "U" POST	BREAKAWAY	SIGNS: REMOVE	SIGNS: RESET	GUIDE: REMOVE	GUIDE: RESET	REMARKS
		8H	RT.		R1-1 W4-4P	48X48 48X24	6-0		4" DIA. PIPE		11-1		6-1	3-0	13.4 8.0						120				■					NEW, R1-1 = STOP W4-4P = CROSS TRAFFIC DOES NOT STOP
		8I	RT.		W2-1 W16-8P	48X48 30X8	10-0		3.5" DIA. PIPE		12-6		5-0	3-0	16.0 1.7						115				■	1				REPLACE, W2-1 = CROSS ROAD W16-8P = NEIBAUER RD
	LT.	8J			W2-1 W16-8P	48X48 30X8	10-0		3.5" DIA. PIPE		12-6		5-0	3-0	16.0 1.7						115				■					NEW, W2-1 = CROSS ROAD W16-8P = NEIBAUER RD
		8K	RT.		R1-1 W4-4P	48X48 48X24	6-0		4" DIA. PIPE		13-0		6-1	3-0	13.4 8.0						141				■	1				REPLACE, R1-1 = STOP W4-4P = CROSS TRAFFIC DOES NOT STOP
					D3-1 D3-1	42X10 42X10									2.9 2.9															D3-1 = S 64TH ST W
					D3-1 D3-1	42X10 42X10									2.9 2.9															D3-1 = NEIBAUER RD
		8L	RT.		W3-1	48X48	10-0		3" DIA. PIPE		12-6		5-0	3-0	16.0						95				■	1				REPLACE, W3-1 = STOP AHEAD
SITE 10	LT.	10A			W2-1 W16-8P	48X48 24X8	SEE ELECTRICAL PLANS								16.0 1.3															NEW, W2-1 = CROSS ROAD W16-8P = S 48TH ST W
	LT.	10B			R1-1 W4-4P	48X48 48X24	SEE ELECTRICAL PLANS								13.4 8.0											1				REPLACE, R1-1 = STOP W4-4P = CROSS TRAFFIC DOES NOT STOP
	LT.	10C			W3-1	48X48	10-0		3" DIA. PIPE		12-6		5-0	3-0	16.0						95				■	1				REPLACE, W3-1 = STOP AHEAD
		10D	RT.		W3-1	48X48	10-0		3" DIA. PIPE		12-6		5-0	3-0	16.0						95				■					NEW, W3-1 = STOP AHEAD
		10E	RT.		R1-1 W4-4P	48X48 48X24	SEE ELECTRICAL PLANS								13.4 8.0															NEW, R1-1 = STOP W4-4P = CROSS TRAFFIC DOES NOT STOP
	LT.	10F			W2-1 W16-8P	48X48 24X8	SEE ELECTRICAL PLANS								16.0 1.3															NEW, W2-1 = CROSS ROAD W16-8P = S 48TH ST W
		10G	RT.		W2-1 W16-8P	48X48 24X8	SEE ELECTRICAL PLANS								16.0 1.3															NEW, W2-1 = CROSS ROAD W16-8P = S 48TH ST W
		10H	RT.		R1-1 W4-4P	48X48 48X24	SEE ELECTRICAL PLANS								13.4 8.0											1				REPLACE, R1-1 = STOP W4-4P = CROSS TRAFFIC DOES NOT STOP
		10I	RT.		W3-1	48X48	10-0		3" DIA. PIPE		12-6		5-0	3-0	16.0						95				■	1				REPLACE, W3-1 = STOP AHEAD
	LT.	10J			W3-1	48X48	10-0		3" DIA. PIPE		12-6		5-0	3-0	16.0						95				■					NEW, W3-1 = STOP AHEAD
	LT.	10K			R1-1 W4-4P	48X48 48X24	SEE ELECTRICAL PLANS								13.4 8.0															NEW, R1-1 = STOP W4-4P = CROSS TRAFFIC DOES NOT STOP
					D3-1 D3-1	42X10 42X10									2.9 2.9															D3-1 = S 48TH ST W
					D3-1 D3-1	42X10 42X10									2.9 2.9															D3-1 = NEIBAUER RD

R.S.F.O. = REPLACE SIGN FACE ONLY

■ = FRANGIBLE SIGN POST
BREAKAWAY DEVICE REQUIRED.

NOTES:
- LT. AND RT. SIGN ORIENTATION BASED FROM WEST TO EAST AND SOUTH TO NORTH.
- MOUNTING HEIGHT MEASURED FROM THE BOTTOM OF THE PRIMARY SIGN.

SHEET NO.
S6

SPECIFICATIONS

PROJECT NAME: SF 189 SOUTH D5 SAFETY IMPRV
COUNTY: CARBON, STILLWATER, & YELLOWSTONE
PROJECT ID: HSIP STWD(817)
UPN: 9912000

CHECKED BY	RCL	03/04/2024
REVIEWED BY	LJF	03/01/2024
DESIGNED BY	SMM	02/29/2024

9912000SISUMZ01.DWG

MONTANA Department of Transportation

SIGNING PLANS

3/7/2024 9:27 AM

ADVERTISED COPY

SIGN LOCATION AND SPECIFICATION

	Lt.	STATION / M.P.	Rt.	RAMP NO.	SIGN NO.	PANEL SIZE	FEET CLEARANCE	FEET SIGN SUPPORT SPACING	TYPE OF SUPPORT	CANTILEVER	FEET SUPPORT LENGTH (ESTIMATED)	FEET SUPPORT LENGTH (INSTALLED)	FEET MOUNTING HEIGHT	FEET FOUNDATION DEPTH	SIGN PANEL (SQ. FT.) SHEET ALUMINUM XI	SIGN PANEL (SQ. FT.) ALUM. SHEET INCREMENT XI	SIGN PANEL (SQ. FT.) ALUMINUM SHT OVERLAY	TIMBER POLE (LINEAR FT.) 4" TOP DIA.	TIMBER POLE (LINEAR FT.) 5" TOP DIA.	TIMBER POLE (LINEAR FT.) 6" TOP DIA.	STEEL POST (LBS.) ROUND TUBULAR	STEEL POST (LBS.) SQUARE TUBULAR	STEEL POST (LBS.) STRUCTURAL STEEL	STEEL POST (LBS.) "U" POST	BREAKAWAY	SIGNS REMOVE	SIGNS RESET	GUIDE REMOVE	GUIDE RESET	REMARKS
		10L	RT.		W2-1 W16-8P	48X48 24X8	SEE ELECTRICAL PLANS								16.0 1.3															NEW, W2-1 = CROSS ROAD W16-8P = S 48TH ST W
SITE 11	LT.	11A			W3-1	48X48	10-0		3" DIA. PIPE		12-6		5-0	3-0	16.0						95				■					NEW, W3-1 = STOP AHEAD
	LT.	11B			R1-1 W4-4P	48X48 48X24	6-0		4" DIA. PIPE		11-1		6-1	3-0	13.4 8.0						120				■					NEW, R1-1 = STOP W4-4P = CROSS TRAFFIC DOES NOT STOP
	LT.	11C			W2-1 W16-8P	48X48 24X8	10-0		3.5" DIA. PIPE		12-6		5-0	3-0	16.0 1.3						115				■	1				REPLACE, W2-1 = CROSS ROAD W16-8P = HESPER RD
		11D	RT.		W2-1 W16-8P	48X48 24X8	10-0		3.5" DIA. PIPE		12-6		5-0	3-0	16.0 1.3						115				■					NEW, W2-1 = CROSS ROAD W16-8P = HESPER RD
	LT.	11E			R1-1 W4-4P	48X48 48X24	6-0		4" DIA. PIPE		11-1		6-1	3-0	13.4 8.0						120				■	1				REPLACE, R1-1 = STOP W4-4P = CROSS TRAFFIC DOES NOT STOP
	LT.	11F			W3-1	48X48	10-0		3" DIA. PIPE		12-6		5-0	3-0	16.0						95				■	1				REPLACE, W3-1 = STOP AHEAD
		11G	RT.		W3-1	48X48	10-0		3" DIA. PIPE		12-6		5-0	3-0	16.0						95				■					NEW, W3-1 = STOP AHEAD
		11H	RT.		R1-1 W4-4P	48X48 48X24	6-0		4" DIA. PIPE		11-1		6-1	3-0	13.4 8.0						120				■					NEW, R1-1 = STOP W4-4P = CROSS TRAFFIC DOES NOT STOP
		11I	RT.		W2-1 W16-8P	48X48 24X8	10-0		3.5" DIA. PIPE		12-6		5-0	3-0	16.0 1.3						115				■	1				REPLACE, W2-1 = CROSS ROAD W16-8P = HESPER RD
	LT.	11J			W2-1 W16-8P	48X48 24X8	10-0		3.5" DIA. PIPE		12-6		5-0	3-0	16.0 1.3						115				■					NEW, W2-1 = CROSS ROAD W16-8P = HESPER RD
		11K	RT.		R1-1 W4-4P	48X48 48X24	6-0		4" DIA. PIPE		13-0		6-1	3-0	13.4 8.0						141				■	1				REPLACE, R1-1 = STOP W4-4P = CROSS TRAFFIC DOES NOT STOP
					D3-1 D3-1	42X10 42X10									2.9 2.9															D3-1 = S 72ND ST W
					D3-1 D3-1	36X10 36X10									2.5 2.5															D3-1 = HESPER RD
		11L	RT.		W3-1	48X48	10-0		3" DIA. PIPE		12-6		5-0	3-0	16.0						95				■	1				REPLACE, W3-1 = STOP AHEAD
SITE 12	LT.	12A			W3-1	48X48	10-0		3" DIA. PIPE		12-6		5-0	3-0	16.0						95				■					NEW, W3-1 = STOP AHEAD
	LT.	12B			R1-1 R1-3P	48X48 30X12	6-0		3" DIA. PIPE		10-1		5-1	3-0	13.4 2.5						77				■					NEW, R1-1 = STOP R1-3P = ALL WAY
	LT.	12C			R1-1 R1-3P	48X48 30X12	6-0		3" DIA. PIPE		10-1		5-1	3-0	13.4 2.5						77				■	1				REPLACE, R1-1 = STOP R1-3P = ALL WAY
	LT.	12D			W3-1	48X48	10-0		3" DIA. PIPE		12-6		5-0	3-0	16.0						95				■	1				REPLACE, W3-1 = STOP AHEAD

R.S.F.O. = REPLACE SIGN FACE ONLY

■ = FRANGIBLE SIGN POST BREAKAWAY DEVICE REQUIRED.

NOTES:
- LT. AND RT. SIGN ORIENTATION BASED FROM WEST TO EAST AND SOUTH TO NORTH.
- MOUNTING HEIGHT MEASURED FROM THE BOTTOM OF THE PRIMARY SIGN.

SHEET NO.
S7

SPECIFICATIONS

PROJECT NAME: SF 189 SOUTH D5 SAFETY IMPRV
COUNTY: CARBON, STILLWATER, & YELLOWSTONE
PROJECT ID: HSIP STWD(817)
UPN: 9912000

CHECKED BY	RCL	03/04/2024
REVIEWED BY	LJF	03/01/2024
DESIGNED BY	SMM	02/29/2024

9912000SISUMZ01.DWG

MONTANA Department of Transportation

SIGNING PLANS

3/7/2024 9:27 AM

ADVERTISED COPY

SIGN LOCATION AND SPECIFICATION

Lt.	STATION / M.P.	Rt.	RAMP NO.	SIGN NO.	PANEL SIZE	FEET CLEARANCE	FEET SIGN SUPPORT SPACING	TYPE OF SUPPORT	CANTILEVER	FEET SUPPORT LENGTH (ESTIMATED)	FEET SUPPORT LENGTH (INSTALLED)	FEET MOUNTING HEIGHT	FEET FOUNDATION DEPTH	SIGN PANEL (SQ. FT.) SHEET ALUMINUM XI	SIGN PANEL (SQ. FT.) ALUM. SHEET INCREMENT XI	SIGN PANEL (SQ. FT.) ALUMINUM SHT OVERLAY	TIMBER POLE (LINEAR FT.) 4" TOP DIA.	TIMBER POLE (LINEAR FT.) 5" TOP DIA.	TIMBER POLE (LINEAR FT.) 6" TOP DIA.	STEEL POST (LBS.) ROUND TUBULAR	STEEL POST (LBS.) SQUARE TUBULAR	STEEL POST (LBS.) STRUCTURAL STEEL	STEEL POST (LBS.) "U" POST	BREAKAWAY	SIGNS REMOVE	SIGNS RESET	GUIDE REMOVE	GUIDE RESET	REMARKS
	12E	RT.		W3-1	48X48	10-0		3" DIA. PIPE		12-6		5-0	3-0	16.0						95				■					NEW, W3-1 = STOP AHEAD
	12F	RT.		R1-1 R1-3P	48X48 30X12	6-0		3" DIA. PIPE		10-1		5-1	3-0	13.4 2.5						77				■					NEW, R1-1 = STOP R1-3P = ALL WAY
LT.	12G			R1-1 R1-3P	48X48 30X12	6-0		3" DIA. PIPE		10-1		5-1	3-0	13.4 2.5						77				■	1				REPLACE, R1-1 = STOP R1-3P = ALL WAY
LT.	12H			W3-1	48X48	10-0		3" DIA. PIPE		12-6		5-0	3-0	16.0						95				■	1				REPLACE, W3-1 = STOP AHEAD
	12I	RT.		W3-1	48X48	10-0		3" DIA. PIPE		12-6		5-0	3-0	16.0						95				■					NEW, W3-1 = STOP AHEAD
	12J	RT.		R1-1 R1-3P	48X48 30X12	6-0		3" DIA. PIPE		10-1		5-1	3-0	13.4 2.5						77				■					NEW, R1-1 = STOP R1-3P = ALL WAY
	12K	RT.		R1-1 R1-3P	48X48 30X12	6-0		3" DIA. PIPE		10-1		5-1	3-0	13.4 2.5						77				■	1				REPLACE, R1-1 = STOP R1-3P = ALL WAY
	12L	RT.		W3-1	48X48	10-0		3" DIA. PIPE		12-6		5-0	3-0	16.0						95				■	1				REPLACE, W3-1 = STOP AHEAD
LT.	12M			W3-1	48X48	10-0		3" DIA. PIPE		12-6		5-0	3-0	16.0						95				■					NEW, W3-1 = STOP AHEAD
LT.	12N			R1-1 R1-3P	48X48 30X12	6-0		3" DIA. PIPE		10-1		5-1	3-0	13.4 2.5						77				■					NEW, R1-1 = STOP R1-3P = ALL WAY
	12O	RT.		R1-1 R1-3P	48X48 30X12	6-0		3.5" DIA. PIPE		12-0		5-1	3-0	13.4 2.5						111				■	1				REPLACE, R1-1 = STOP R1-3P = ALL WAY
				D3-1 D3-1	42X10 42X10									2.9 2.9															D3-1 = S 64TH ST W
				D3-1 D3-1	36X10 36X10									2.5 2.5															D3-1 = HESPER RD
	12P	RT.		W3-1	48X48	10-0		3" DIA. PIPE		12-6		5-0	3-0	16.0						95				■	1				REPLACE, W3-1 = STOP AHEAD
SITE 15 LT.	15A			W3-1	48X48	10-0		3" DIA. PIPE		12-6		5-0	3-0	16.0						95				■					NEW, W3-1 = STOP AHEAD
LT.	15B			R1-1	48X48	6-0		3" DIA. PIPE		10-0		5-0	3-0	13.4						76				■					NEW, R1-1 = STOP
LT.	15C			R1-1	48X48	6-0		3" DIA. PIPE		10-0		5-0	3-0	13.4						76				■	1				REPLACE, R1-1 = STOP
LT.	15D			W3-1	48X48	10-0		3" DIA. PIPE		12-6		5-0	3-0	16.0						95				■					NEW, W3-1 = STOP AHEAD
	15E	RT.		W3-1	48X48	10-0		3" DIA. PIPE		12-6		5-0	3-0	16.0						95				■					NEW, W3-1 = STOP AHEAD

R.S.F.O. = REPLACE SIGN FACE ONLY

■ = FRANGIBLE SIGN POST
BREAKAWAY DEVICE REQUIRED.

NOTES:
- LT. AND RT. SIGN ORIENTATION BASED FROM WEST TO EAST AND SOUTH TO NORTH.
- MOUNTING HEIGHT MEASURED FROM THE BOTTOM OF THE PRIMARY SIGN.

SHEET NO.
S8

SPECIFICATIONS

PROJECT NAME
SF 189 SOUTH D5 SAFETY IMPRV

COUNTY
CARBON, STILLWATER, & YELLOWSTONE

PROJECT ID
HSIP STWD(817)

UPN
9912000

CHECKED BY	RCL	03/04/2024
REVIEWED BY	LJF	03/01/2024
DESIGNED BY	SMM	02/29/2024

9912000SISUMZ01.DWG

MONTANA
Department of Transportation

SIGNING PLANS

3/7/2024 9:27 AM

ADVERTISED COPY

SIGN LOCATION AND SPECIFICATION

Lt.	STATION / M.P.	Rt.	RAMP NO.	SIGN NO.	PANEL SIZE	FEET CLEARANCE	FEET SIGN SUPPORT SPACING	TYPE OF SUPPORT	CANTILEVER	FEET SUPPORT LENGTH (ESTIMATED)	FEET SUPPORT LENGTH (INSTALLED)	FEET MOUNTING HEIGHT	FEET FOUNDATION DEPTH	SIGN PANEL (SQ. FT.) SHEET ALUMINUM XI	SIGN PANEL (SQ. FT.) ALUM. SHEET INCREMENT XI	SIGN PANEL (SQ. FT.) ALUMINUM SHT OVERLAY	TIMBER POLE (LINEAR FT.) 4" TOP DIA.	TIMBER POLE (LINEAR FT.) 5" TOP DIA.	TIMBER POLE (LINEAR FT.) 6" TOP DIA.	STEEL POST (LBS.) ROUND TUBULAR	STEEL POST (LBS.) SQUARE TUBULAR	STEEL POST (LBS.) STRUCTURAL STEEL	STEEL POST (LBS.) "U" POST	BREAKAWAY	SIGNS REMOVE	SIGNS RESET	GUIDE REMOVE	GUIDE RESET	REMARKS
	15F	RT.		R1-1	48X48	6-0		3" DIA. PIPE		10-0		5-0	3-0	13.4						76				■					NEW, R1-1 =STOP
LT.	15G			R1-1	48X48	6-0		3" DIA. PIPE		10-0		5-0	3-0	13.4						76				■	1				REPLACE, R1-1 =STOP
LT.	15H			W3-1	48X48	10-0		3" DIA. PIPE		12-6		5-0	3-0	16.0						95				■	1				REPLACE, W3-1 =STOP AHEAD
	15I	RT.		W3-1	48X48	10-0		3" DIA. PIPE		12-6		5-0	3-0	16.0						95				■					NEW, W3-1 =STOP AHEAD
	15J	RT.		R1-1	48X48	6-0		3" DIA. PIPE		10-0		5-0	3-0	13.4						76				■					NEW, R1-1 =STOP
	15K	RT.		R1-1	48X48	6-0		3" DIA. PIPE		10-0		5-0	3-0	13.4						76				■	1				REPLACE, R1-1 =STOP
	15L	RT.		W3-1	48X48	10-0		3" DIA. PIPE		12-6		5-0	3-0	16.0						95				■	1				REPLACE, W3-1 =STOP AHEAD
LT.	15M			W3-1	48X48	10-0		3" DIA. PIPE		12-6		5-0	3-0	16.0						95				■					NEW, W3-1 =STOP AHEAD
LT.	15N			R1-1	48X48	6-0		3" DIA. PIPE		10-0		5-0	3-0	13.4						76				■					NEW, R1-1 =STOP
	15O	RT.		R1-1	48X48	6-0		3" DIA. PIPE		12-0		5-0	3-0	13.4						91				■	1				REPLACE, R1-1 =STOP
				D3-1	42X10									2.9															D3-1 = S 72ND ST W
				D3-1	42X10									2.9															
				D3-1	42X10									2.9															D3-1 = KING AVE W
				D3-1	42X10									2.9															
	15P	RT.		W3-1	48X48	10-0		3" DIA. PIPE		12-6		5-0	3-0	16.0						95				■	1				REPLACE, W3-1 =STOP AHEAD
	15Q	RT.		R1-2	48X48X48	6-0		3" DIA. PIPE		9-6		5-0	3-0	6.9						73				■	1				REPLACE, R1-2 - YIELD
SITE 16 LT.	16A			W2-1	48X48	10-0		3.5" DIA.		12-6		5-0	3-0	16.0						115				■					NEW, W2-1 = CROSS ROAD
				W16-8P	24X8			PIPE						1.3															W16-8P = S 64TH ST W
LT.	16B			R1-1	48X48	6-0		4" DIA. PIPE		11-1		6-1	3-0	13.4						120				■	1				REPLACE, R1-1 =STOP
				W4-4P	48X24									8.0															W4-4P = CROSS TRAFFIC DOES NOT STOP
LT.	16C			W3-1	48X48	10-0		3" DIA. PIPE		12-6		5-0	3-0	16.0						95				■	1				REPLACE, W3-1 =STOP AHEAD
	16D	RT.		W3-1	48X48	10-0		3" DIA. PIPE		12-6		5-0	3-0	16.0						95				■					NEW, W3-1 =STOP AHEAD
	16E	RT.		R1-1	48X48	6-0		4" DIA. PIPE		11-1		6-1	3-0	13.4						120				■					NEW, R1-1 =STOP
				W4-4P	48X24									8.0															W4-4P = CROSS TRAFFIC DOES NOT STOP

R.S.F.O. = REPLACE SIGN FACE ONLY

■ = FRANGIBLE SIGN POST
BREAKAWAY DEVICE REQUIRED.

NOTES:
- LT. AND RT. SIGN ORIENTATION BASED FROM WEST TO EAST AND SOUTH TO NORTH.
- MOUNTING HEIGHT MEASURED FROM THE BOTTOM OF THE PRIMARY SIGN.

SHEET NO.
S9

SPECIFICATIONS

PROJECT NAME
SF 189 SOUTH D5 SAFETY IMPRV
COUNTY
CARBON, STILLWATER, & YELLOWSTONE
PROJECT ID
HSIP STWD(817)
UPN
9912000

CHECKED BY	RCL	03/04/2024
REVIEWED BY	LJF	03/01/2024
DESIGNED BY	SMM	02/29/2024

9912000SISUMZ01.DWG

MONTANA
Department of Transportation

SIGNING PLANS

3/7/2024 9:27 AM

ADVERTISED COPY

SIGN LOCATION AND SPECIFICATION

	Lt.	STATION / M.P.	Rt.	RAMP NO.	SIGN NO.	PANEL SIZE	FEET CLEARANCE	FEET SIGN SUPPORT SPACING	TYPE OF SUPPORT	CANTILEVER	FEET SUPPORT LENGTH (ESTIMATED)	FEET SUPPORT LENGTH (INSTALLED)	FEET MOUNTING HEIGHT	FEET FOUNDATION DEPTH	SIGN PANEL (SQ. FT.) SHEET ALUMINUM XI	SIGN PANEL (SQ. FT.) ALUM. SHEET INCREMENT XI	SIGN PANEL (SQ. FT.) ALUMINUM SHT OVERLAY	TIMBER POLE (LINEAR FT.) 4" TOP DIA.	TIMBER POLE (LINEAR FT.) 5" TOP DIA.	TIMBER POLE (LINEAR FT.) 6" TOP DIA.	STEEL POST (LBS.) ROUND TUBULAR	STEEL POST (LBS.) SQUARE TUBULAR	STEEL POST (LBS.) STRUCTURAL STEEL	STEEL POST (LBS.) "U" POST	BREAKAWAY	SIGNS REMOVE	SIGNS RESET	GUIDE REMOVE	GUIDE RESET	REMARKS
	LT.	16F			W2-1 W16-8P	48X48 24X8	10-0		3.5" DIA. PIPE		12-6		5-0	3-0	16.0 1.3						115				■	1				REPLACE, W2-1 = CROSS ROAD W16-8P = S 64TH ST W
		16G	RT.		W2-1 W16-8P	48X48 24X8	10-0		3.5" DIA. PIPE		12-6		5-9	3-0	16.0 1.3						115				■					NEW, W2-1 = CROSS ROAD W16-8P = S 64TH ST W
		16H	RT.		R1-1 W4-4P	48X48 48X24	6-0		4" DIA. PIPE		11-1		6-1	3-0	13.4 8.0						120				■	1				REPLACE, R1-1 = STOP W4-4P = CROSS TRAFFIC DOES NOT STOP
		16I	RT.		W3-1	48X48	10-0		3" DIA. PIPE		12-6		5-0	3-0	16.0						95				■	1				REPLACE, W3-1 = STOP AHEAD
	LT.	16J			W3-1	48X48	10-0		3" DIA. PIPE		12-6		5-0	3-0	16.0						95				■					NEW, W3-1 = STOP AHEAD
	LT.	16K			R1-1 W4-4P	48X48 48X24	6-0		4" DIA. PIPE		13-0		6-1	3-0	13.4 8.0						141				■					NEW, R1-1 = STOP W4-4P = CROSS TRAFFIC DOES NOT STOP
					D3-1 D3-1 D3-1 D3-1	42X10 42X10 42X10 42X10									2.9 2.9 2.9 2.9																D3-1 = S 64TH ST W D3-1 = KING AVE W
		16L	RT.		W2-1 W16-8P	48X48 24X8	10-0		3.5" DIA. PIPE		12-6		5-0	3-0	16.0 1.3						115				■	1				REPLACE, W2-1 = CROSS ROAD W16-8P = S 64TH ST W
SITE 18	LT.	18A			R1-1 D3-1	48X48 42X10	SEE ELECTRICAL PLANS								13.4 2.9											1				REPLACE, R1-1 = STOP D3-1 = OLD HWY 10 W
					D3-1 D3-2 D3-2	42X10 36X18 36X18									2.9 4.5 4.5																D3-2 = GOLF COURSE RD
		18B	RT.		R1-1 D3-1	48X48 42X10	SEE ELECTRICAL PLANS								13.4 2.9											1				REPLACE, R1-1 = STOP D3-1 = OLD HWY 10 W
					D3-1 D3-1 D3-1	42X10 36X10 36X10									2.9 2.5 2.5																D3-1 = 19TH AVE W
														TOTALS	2,615.5	21.0			32		13,217					72				

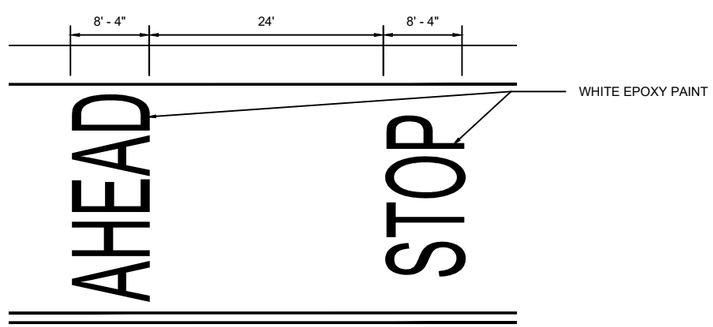

PAVEMENT MARKING DETAIL - STOP AHEAD

DELINEATOR LEGEND

DELINEATOR A	N LEG	E LEG	S LEG	W LEG	TOTAL
SITE 4	8	8	8	8	32
SITE 11	8	8	8	8	32
SITE 16	8	8	8	8	32
ALL SITES					96

R.S.F.O. = REPLACE SIGN FACE ONLY

■ = FRANGIBLE SIGN POST BREAKAWAY DEVICE REQUIRED.

NOTES:
- LT. AND RT. SIGN ORIENTATION BASED FROM WEST TO EAST AND SOUTH TO NORTH.
- MOUNTING HEIGHT MEASURED FROM THE BOTTOM OF THE PRIMARY SIGN.

SHEET NO.
S10

SPECIFICATIONS

PROJECT NAME SF 189 SOUTH D5 SAFETY IMPRV
COUNTY CARBON, STILLWATER, & YELLOWSTONE
PROJECT ID HSIP STWD(817)
UPN 9912000

CHECKED BY	RCL	03/04/2024
REVIEWED BY	LJF	03/01/2024
DESIGNED BY	SMM	02/29/2024

9912000SISUMZ01.DWG

MONTANA Department of Transportation

SIGNING PLANS

3/7/2024 9:27 AM

ADVERTISED COPY

TRANSVERSE RUMBLE STRIP LAYOUT DETAIL (50 MPH)

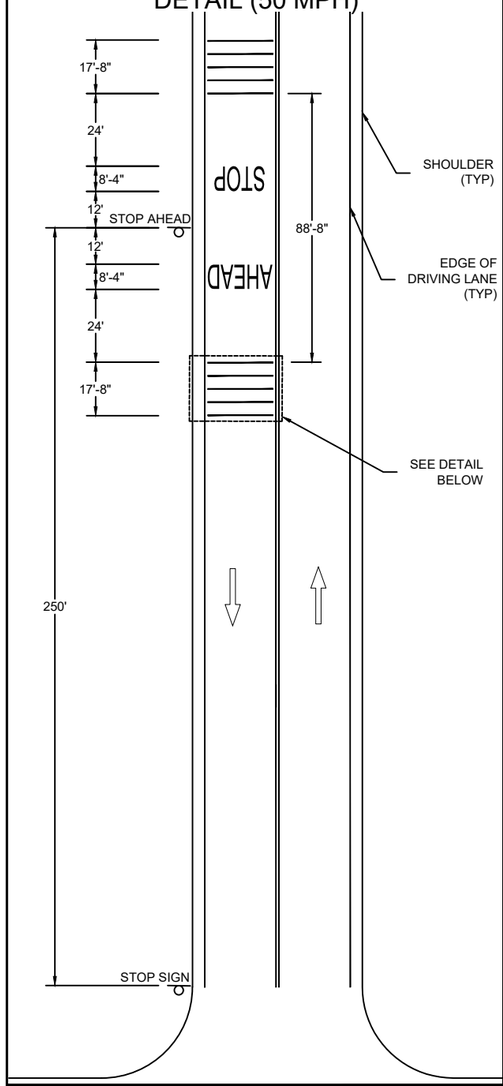

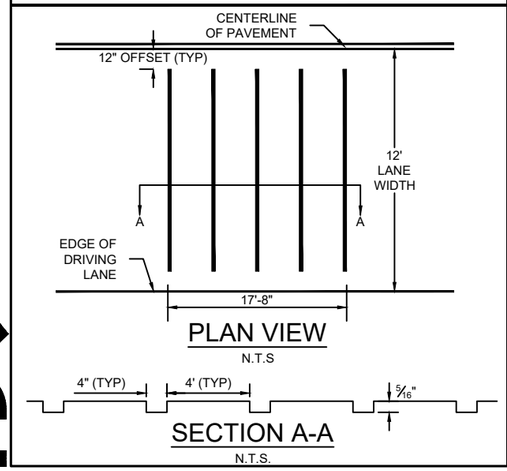

PLAN VIEW
N.T.S

SECTION A-A
N.T.S.

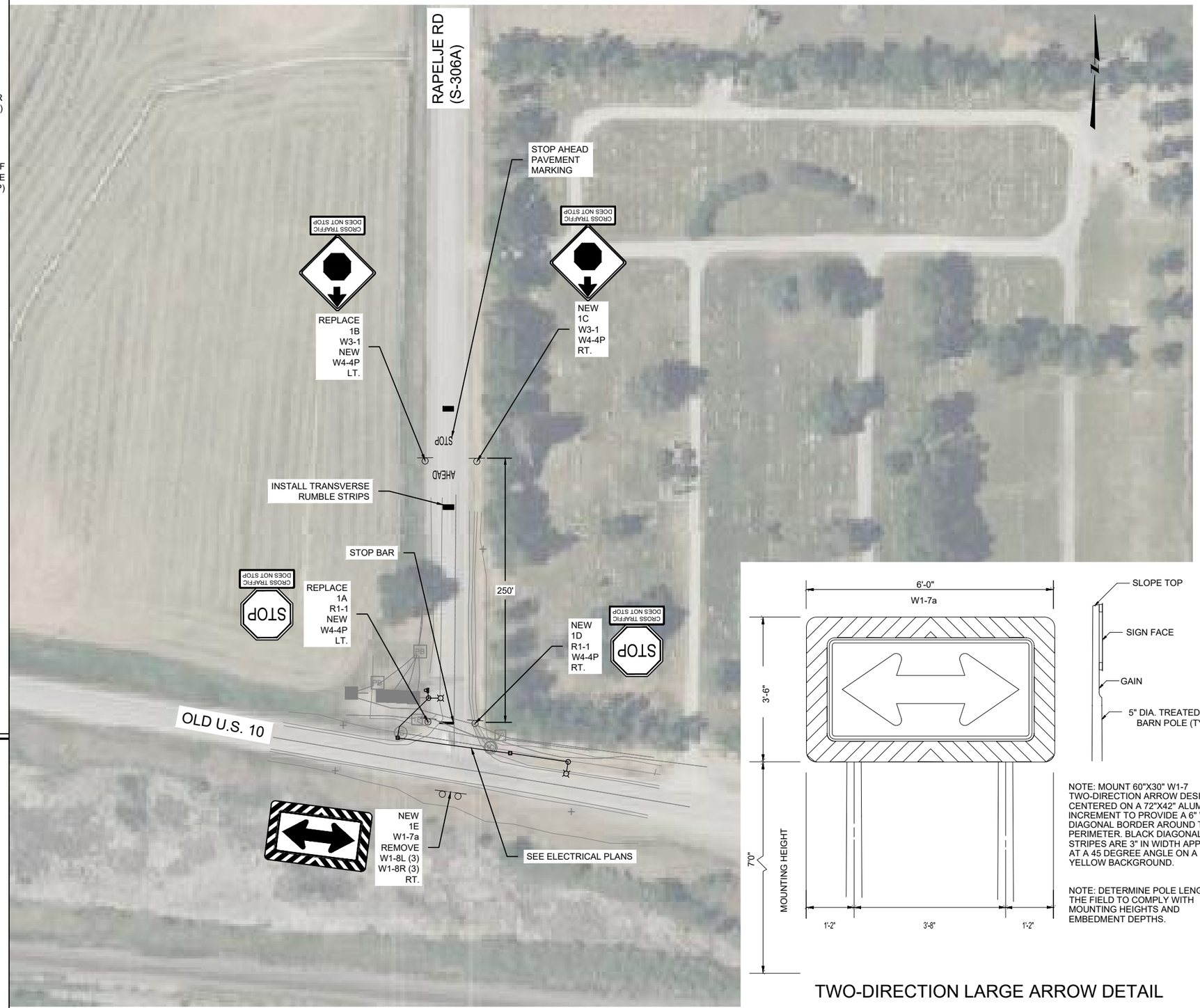

NOTE: MOUNT 60"X30" W1-7 TWO-DIRECTION ARROW DESIGN CENTERED ON A 72"X42" ALUMINUM INCREMENT TO PROVIDE A 6" WIDE DIAGONAL BORDER AROUND THE PERIMETER. BLACK DIAGONAL STRIPES ARE 3" IN WIDTH APPLIED AT A 45 DEGREE ANGLE ON A YELLOW BACKGROUND.

NOTE: DETERMINE POLE LENGTHS IN THE FIELD TO COMPLY WITH MOUNTING HEIGHTS AND EMBEDMENT DEPTHS.

TWO-DIRECTION LARGE ARROW DETAIL

NOTE: LT. AND RT. SIGN ORIENTATION BASED FROM WEST TO EAST AND SOUTH TO NORTH

SHEET NO.
S11

SITE 1

PROJECT NAME: SF 189 SOUTH D5 SAFETY IMPRV
COUNTY: CARBON, STILLWATER, & YELLOWSTONE
PROJECT ID: HSIP STWD(817)
UPN: 9912000

CHECKED BY	RCL	03/04/2024
REVIEWED BY	LJF	03/01/2024
DESIGNED BY	SMM	02/29/2024

9912000SIPLNZ01.DWG

MONTANA Department of Transportation

SIGNING PLANS

3/5/2024 10:00 AM

ADVERTISED COPY

NOTE: LT. AND RT. SIGN ORIENTATION BASED
FROM WEST TO EAST AND SOUTH TO NORTH

SHEET NO.
S12

SITE 2

PROJECT NAME
SF 189 SOUTH D5 SAFETY IMPRV

COUNTY
CARBON, STILLWATER, & YELLOWSTONE

PROJECT ID
HSIP STWD(817)

UPN
9912000

CHECKED BY	RCL
REVIEWED BY	LJF
DESIGNED BY	SMM

03/04/2024
03/01/2024
02/29/2024

9912000SIPLNZ01.DWG

MONTANA
Department of Transportation

SIGNING PLANS

3/5/2024 10:00 AM

ADVERTISED COPY

NOTE: LT. AND RT. SIGN ORIENTATION BASED
FROM WEST TO EAST AND SOUTH TO NORTH

SHEET NO.
S13

SITE 3

PROJECT NAME
SF 189 SOUTH D5 SAFETY IMPRV

COUNTY
CARBON, STILLWATER, & YELLOWSTONE

PROJECT ID
HSIP STWD(817)

UPN
9912000

CHECKED BY	RCL	03/04/2024
REVIEWED BY	LJF	03/01/2024
DESIGNED BY	SMM	02/29/2024

9912000S/PLNZ01.DWG

MONTANA
Department of Transportation

SIGNING PLANS

3/5/2024 10:00 AM

ADVERTISED COPY

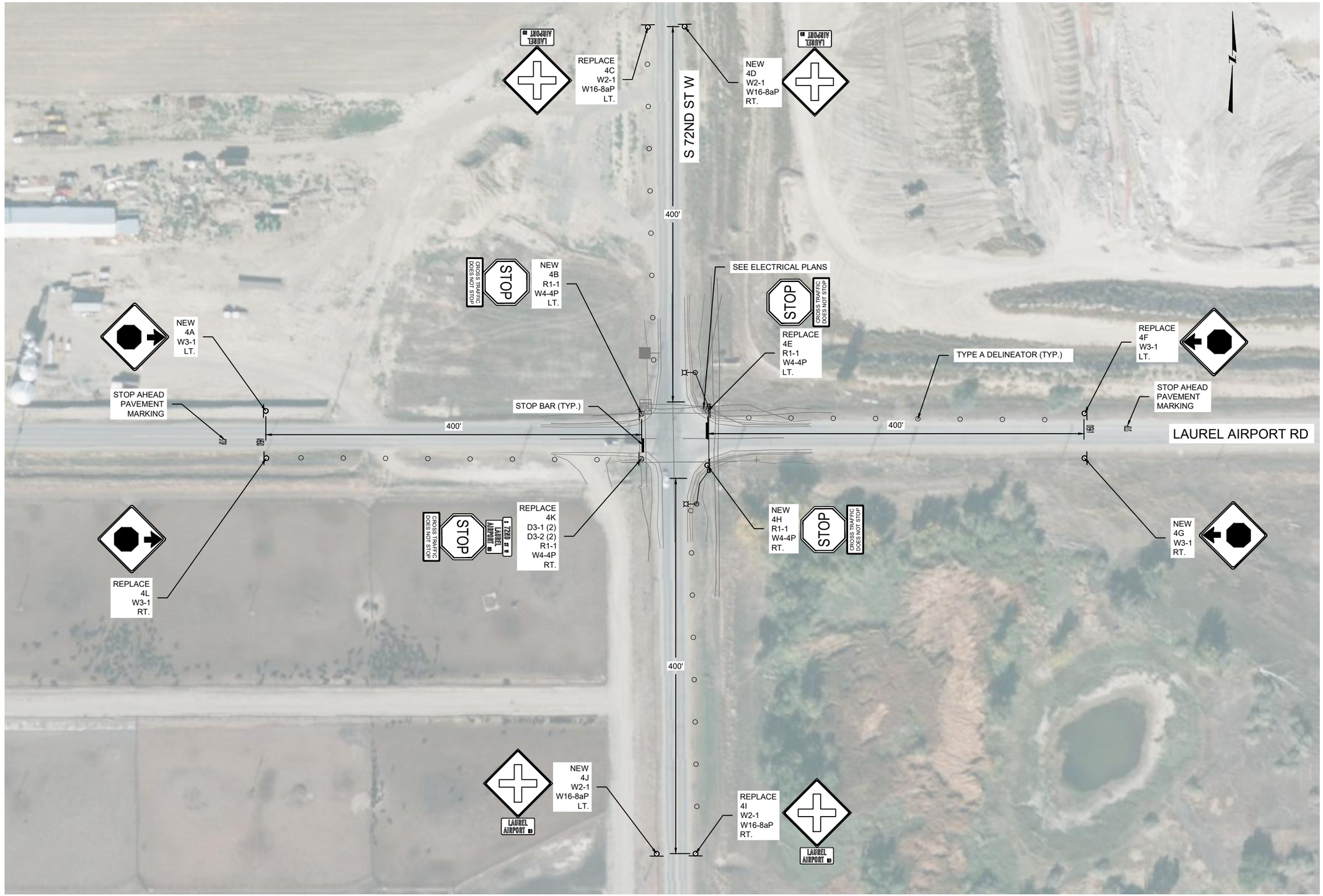

NOTE: LT. AND RT. SIGN ORIENTATION BASED
FROM WEST TO EAST AND SOUTH TO NORTH

SHEET NO.
S14

SITE 4

PROJECT NAME
SF 189 SOUTH D5 SAFETY IMPRV

COUNTY
CARBON, STILLWATER, & YELLOWSTONE

PROJECT ID
HSIP STWD(817)

UPN
9912000

CHECKED BY	RCL	03/04/2024
REVIEWED BY	LJF	03/01/2024
DESIGNED BY	SMM	02/29/2024

9912000SIPLNZ01.DWG

MONTANA
Department of Transportation

SIGNING PLANS

3/5/2024 10:00 AM

ADVERTISED COPY

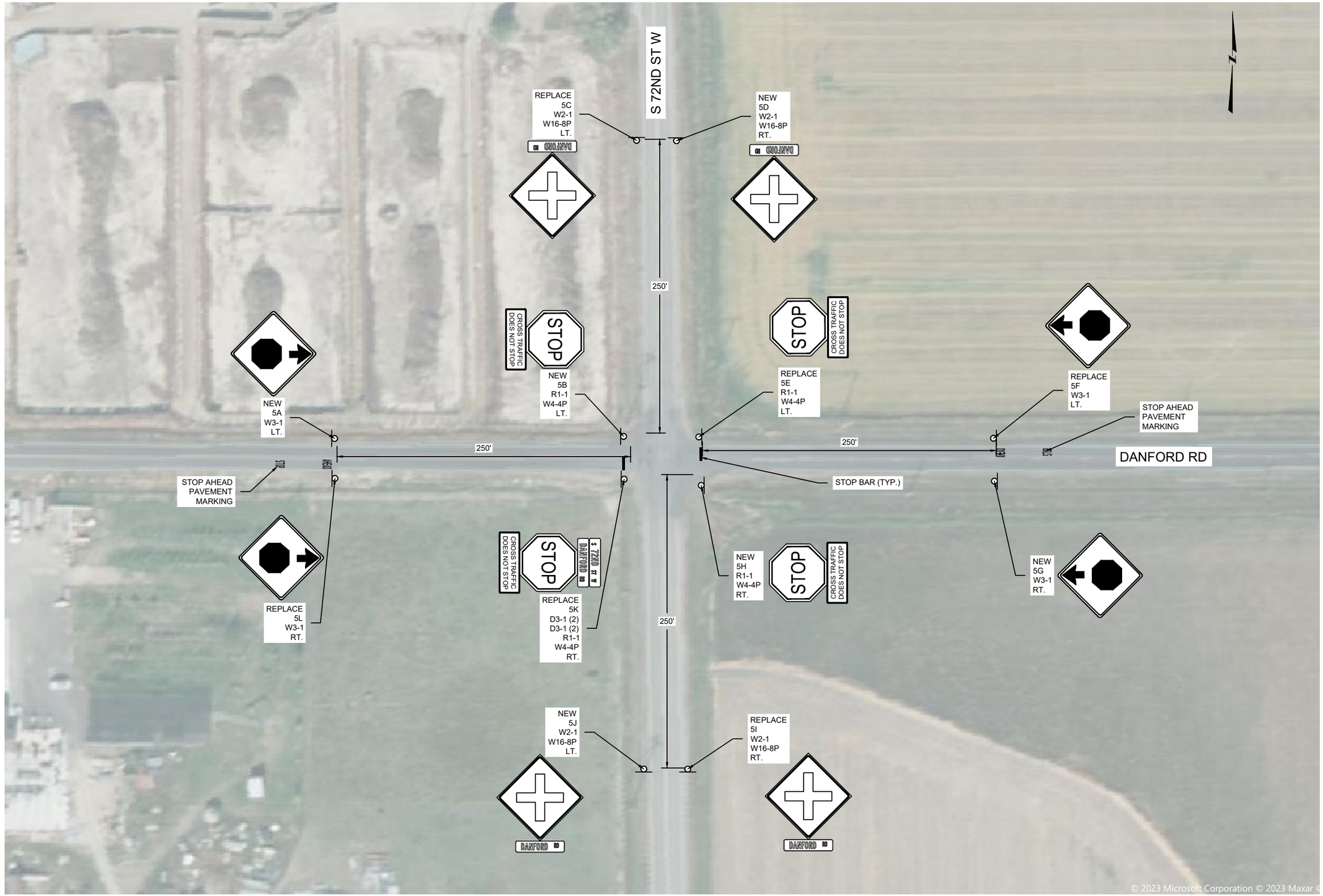

NOTE: LT. AND RT. SIGN ORIENTATION BASED FROM WEST TO EAST AND SOUTH TO NORTH

SHEET NO.
S15

SITE 5

PROJECT NAME: SF 189 SOUTH D5 SAFETY IMPRV
COUNTY: CARBON, STILLWATER, & YELLOWSTONE
PROJECT ID: HSIP STWD(817)
UPN: 9912000

CHECKED BY	RCL	03/04/2024
REVIEWED BY	LJF	03/01/2024
DESIGNED BY	SMM	02/29/2024

9912000SIPLNZ01.DWG

MONTANA Department of Transportation

SIGNING PLANS

3/5/2024 10:00 AM

ADVERTISED COPY

NOTE: LT. AND RT. SIGN ORIENTATION BASED FROM WEST TO EAST AND SOUTH TO NORTH

SHEET NO.	S16
SITE 6	
PROJECT NAME	SF 189 SOUTH D5 SAFETY IMPRV
COUNTY	CARBON, STILLWATER, & YELLOWSTONE
PROJECT ID	HSIP STWD(817)
UPN	9912000
CHECKED BY	RCL 03/04/2024
REVIEWED BY	LJF 03/01/2024
DESIGNED BY	SMM 02/29/2024

MONTANA Department of Transportation

SIGNING PLANS

3/5/2024 10:00 AM

9912000SIPLNZ01.DWG

HDR

ADVERTISED COPY

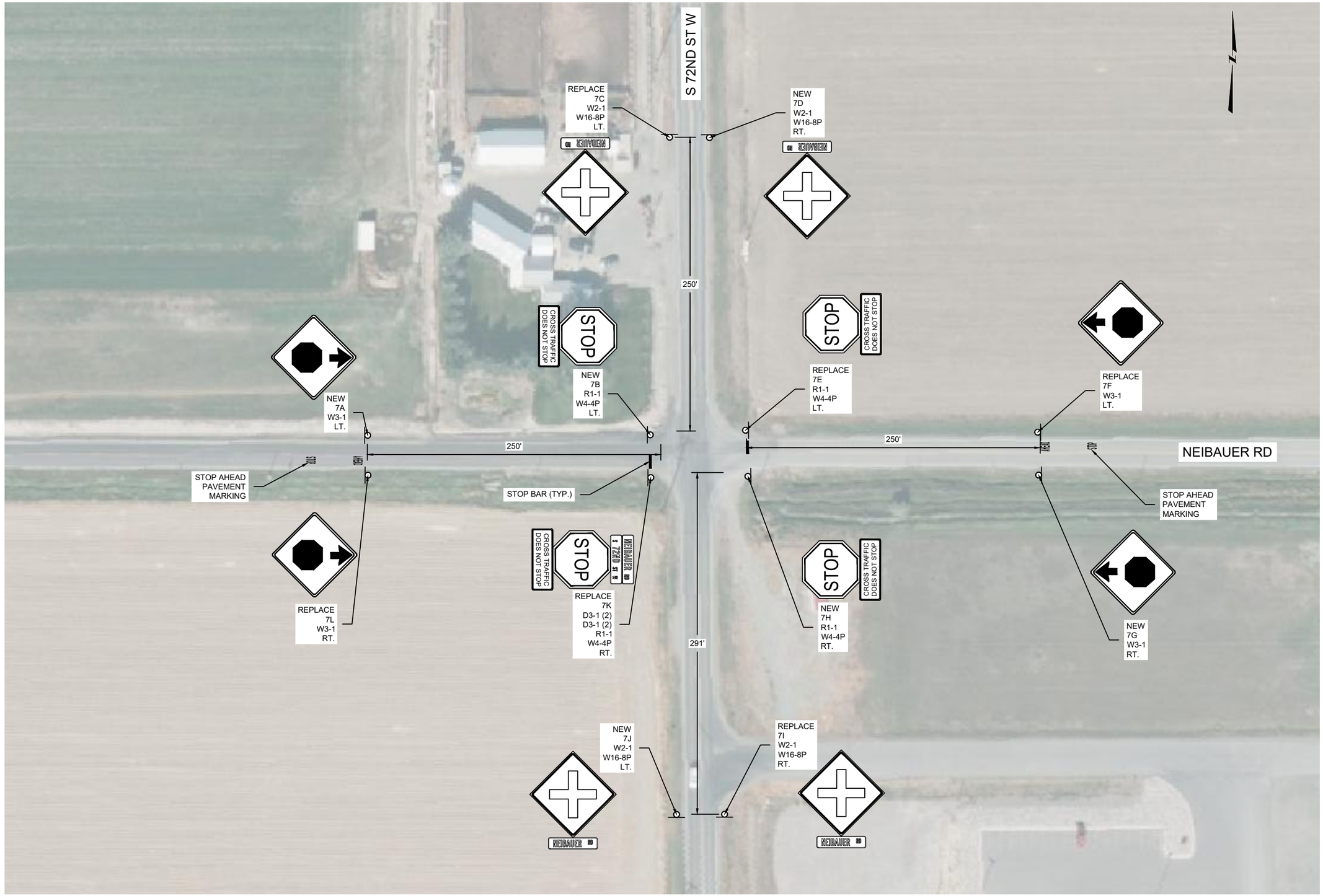

NOTE: LT. AND RT. SIGN ORIENTATION BASED FROM WEST TO EAST AND SOUTH TO NORTH

SHEET NO.
S17

SITE 7

PROJECT NAME: SF 189 SOUTH D5 SAFETY IMPRV
COUNTY: CARBON, STILLWATER, & YELLOWSTONE
PROJECT ID: HSIP STWD(817)
UPN: 9912000

CHECKED BY	RCL	03/04/2024
REVIEWED BY	LJF	03/01/2024
DESIGNED BY	SMM	02/29/2024

9912000SIPLNZ01.DWG

MONTANA Department of Transportation

SIGNING PLANS

3/5/2024 10:00 AM

ADVERTISED COPY

NOTE: LT. AND RT. SIGN ORIENTATION BASED FROM WEST TO EAST AND SOUTH TO NORTH

SHEET NO.
S18

SITE 8

PROJECT NAME
SF 189 SOUTH D5 SAFETY IMPRV

COUNTY
CARBON, STILLWATER, & YELLOWSTONE

PROJECT ID
HSIP STWD(817)

UPN
9912000

CHECKED BY	RCL	03/04/2024
REVIEWED BY	LJF	03/01/2024
DESIGNED BY	SMM	02/29/2024

9912000SIPLNZ01.DWG

MONTANA
Department of Transportation

SIGNING PLANS

3/5/2024 10:00 AM

ADVERTISED COPY

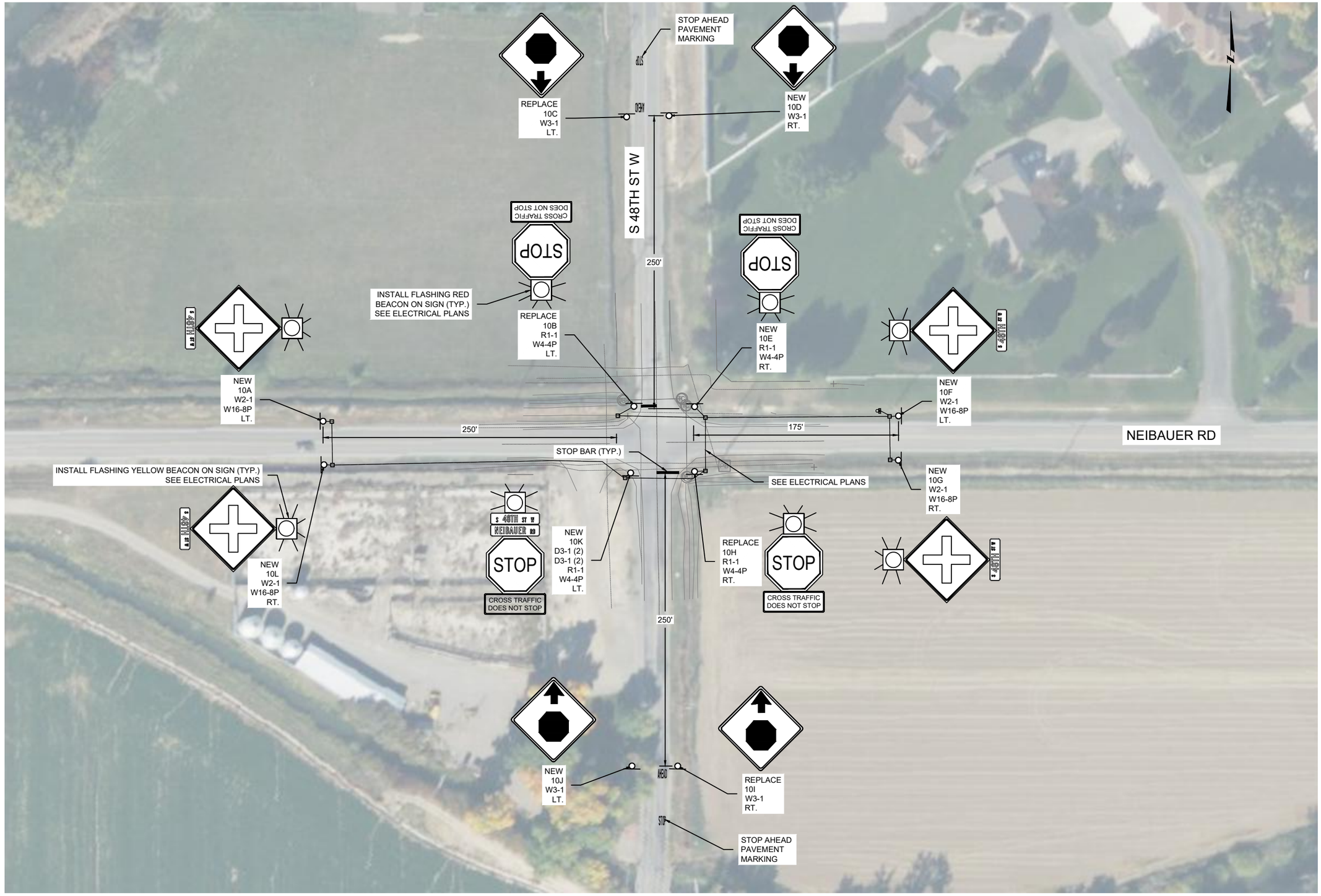

NOTE: LT. AND RT. SIGN ORIENTATION BASED FROM WEST TO EAST AND SOUTH TO NORTH

SHEET NO.
S19

SITE 10

PROJECT NAME: SF 189 SOUTH D5 SAFETY IMPRV
COUNTY: CARBON, STILLWATER, & YELLOWSTONE
PROJECT ID: HSIP STWD(817)
UPN: 9912000

CHECKED BY	RCL	03/04/2024
REVIEWED BY	LJF	03/01/2024
DESIGNED BY	SMM	02/29/2024

9912000SIPLNZ02.DWG

MONTANA Department of Transportation

SIGNING PLANS

3/7/2024 9:27 AM

ADVERTISED COPY

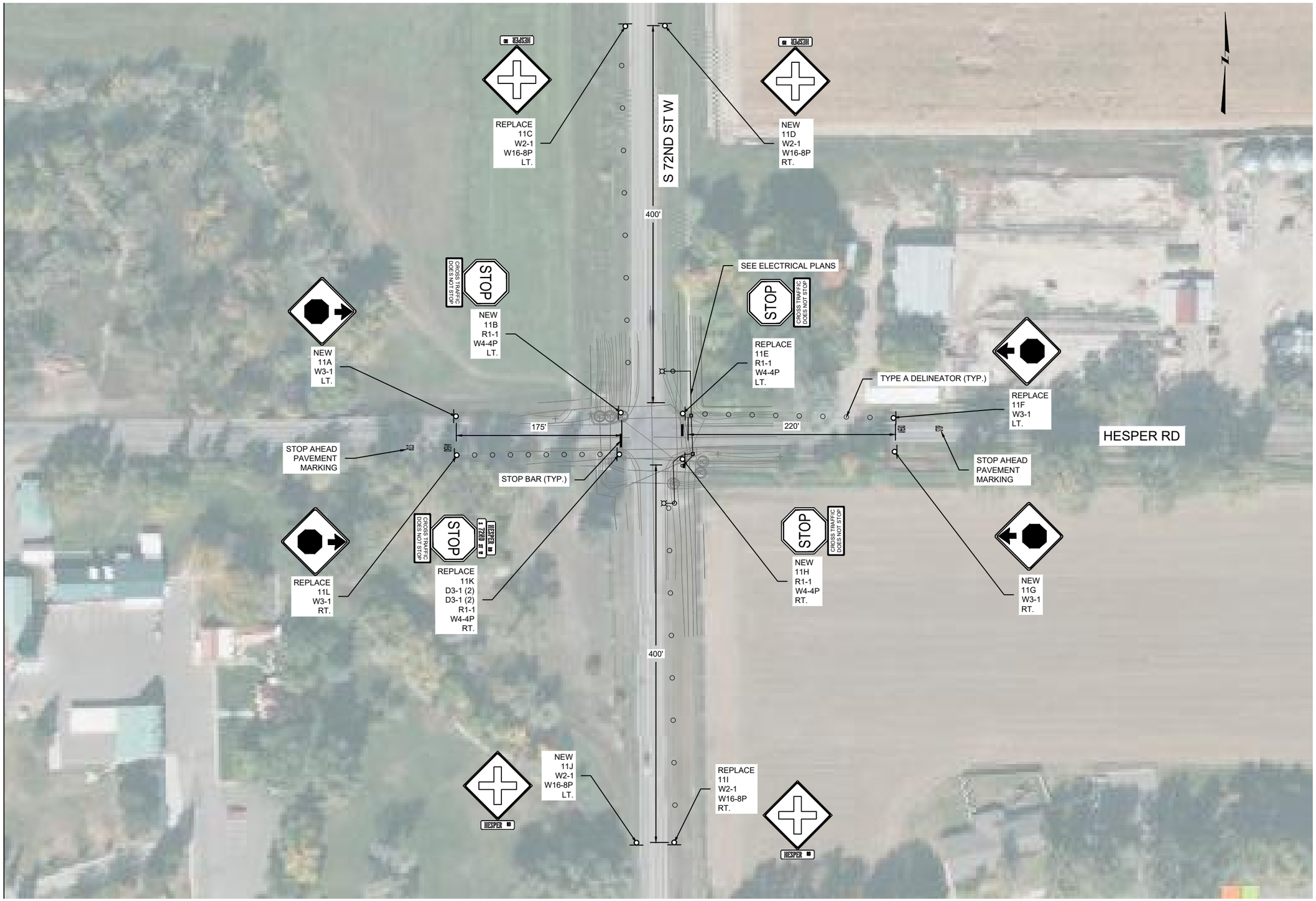

NOTE: LT. AND RT. SIGN ORIENTATION BASED
FROM WEST TO EAST AND SOUTH TO NORTH

SHEET NO.
S20

SITE 11

PROJECT NAME SF 189 SOUTH D5 SAFETY IMPRV
COUNTY CARBON, STILLWATER, & YELLOWSTONE
PROJECT ID HSIP STWD(817)
UPN 9912000

CHECKED BY	RCL	03/04/2024
REVIEWED BY	LJF	03/01/2024
DESIGNED BY	SMM	02/29/2024

9912000SIPLNZ02.DWG

MONTANA Department of Transportation

SIGNING PLANS

3/7/2024 9:27 AM

ADVERTISED COPY

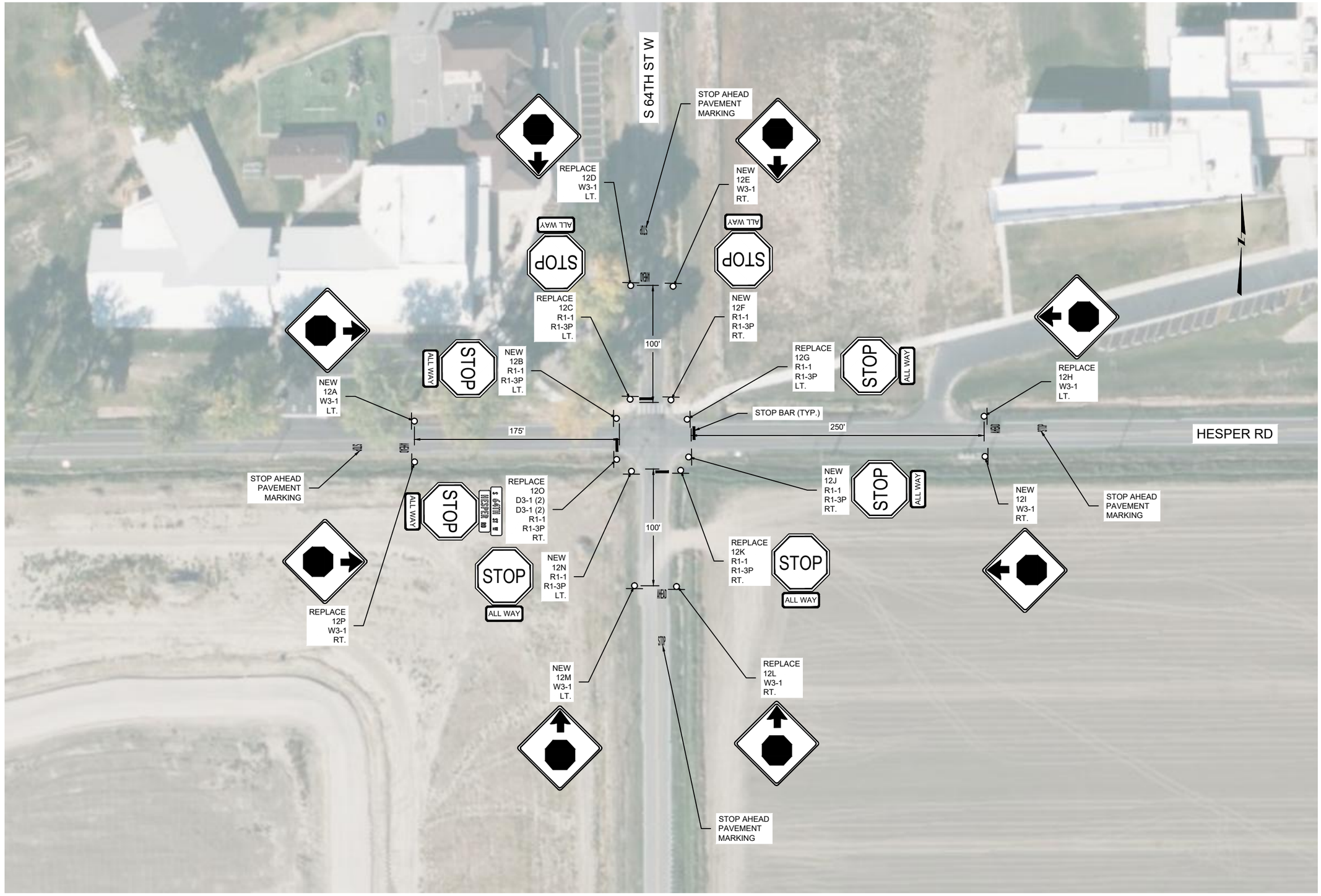

NOTE: LT. AND RT. SIGN ORIENTATION BASED FROM WEST TO EAST AND SOUTH TO NORTH

SHEET NO.
S21

SITE 12

PROJECT NAME
SF 189 SOUTH D5 SAFETY IMPRV

COUNTY
CARBON, STILLWATER, & YELLOWSTONE

PROJECT ID
HSIP STWD(817)

UPN
9912000

CHECKED BY	RCL	03/04/2024
REVIEWED BY	LJF	03/01/2024
DESIGNED BY	SMM	02/29/2024

9912000SIPLNZ02.DWG

MONTANA Department of Transportation

SIGNING PLANS

3/7/2024 9:27 AM

ADVERTISED COPY

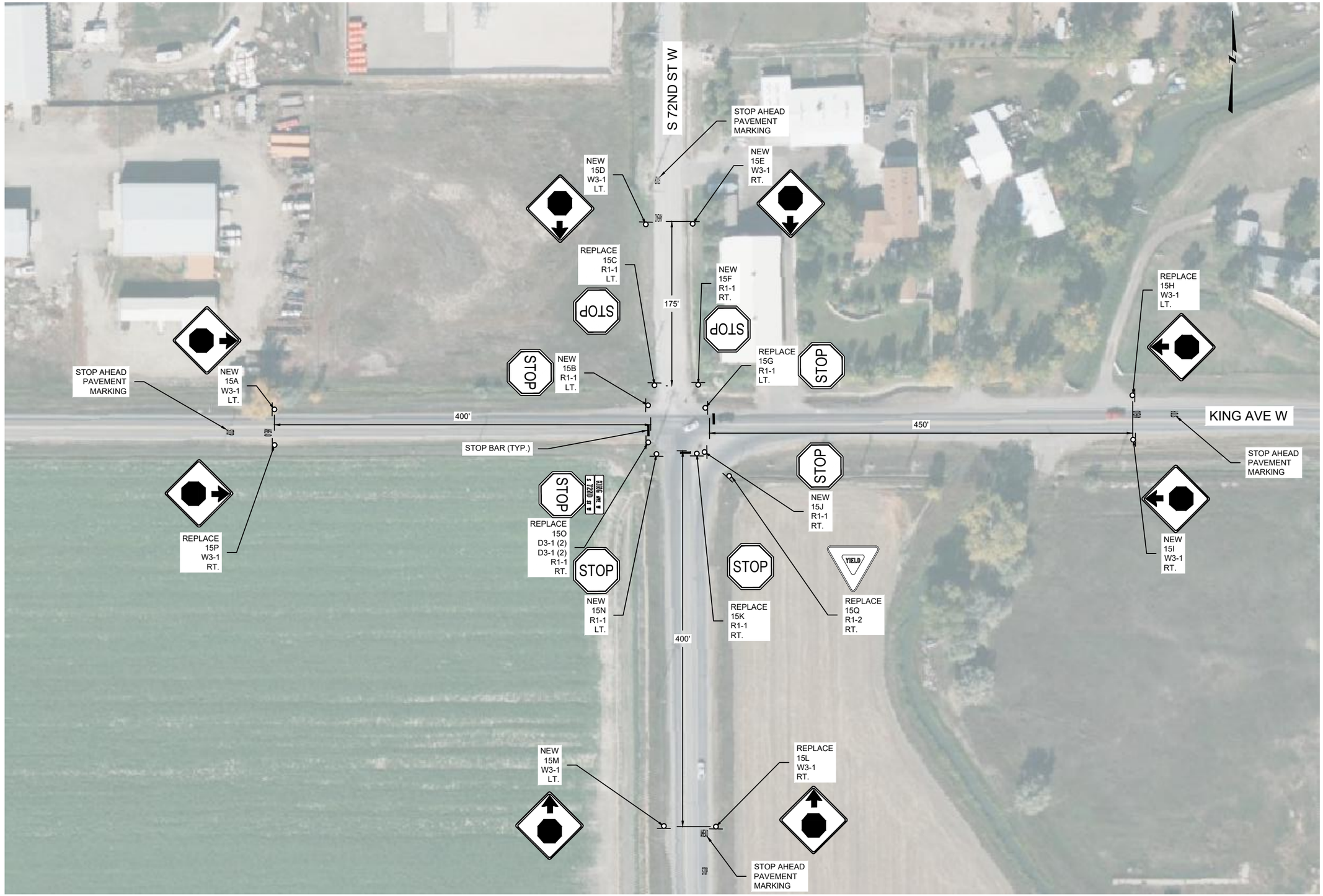

NOTE: LT. AND RT. SIGN ORIENTATION BASED FROM WEST TO EAST AND SOUTH TO NORTH

SHEET NO.
S22

SITE 15

PROJECT NAME: SF 189 SOUTH D5 SAFETY IMPRV
COUNTY: CARBON, STILLWATER, & YELLOWSTONE
PROJECT ID: HSIP STWD(817)
UPN: 9912000

CHECKED BY	RCL	03/04/2024
REVIEWED BY	LJF	03/01/2024
DESIGNED BY	SMM	02/29/2024

9912000S/PLNZ02.DWG

MONTANA Department of Transportation

SIGNING PLANS

3/7/2024 9:27 AM

ADVERTISED COPY

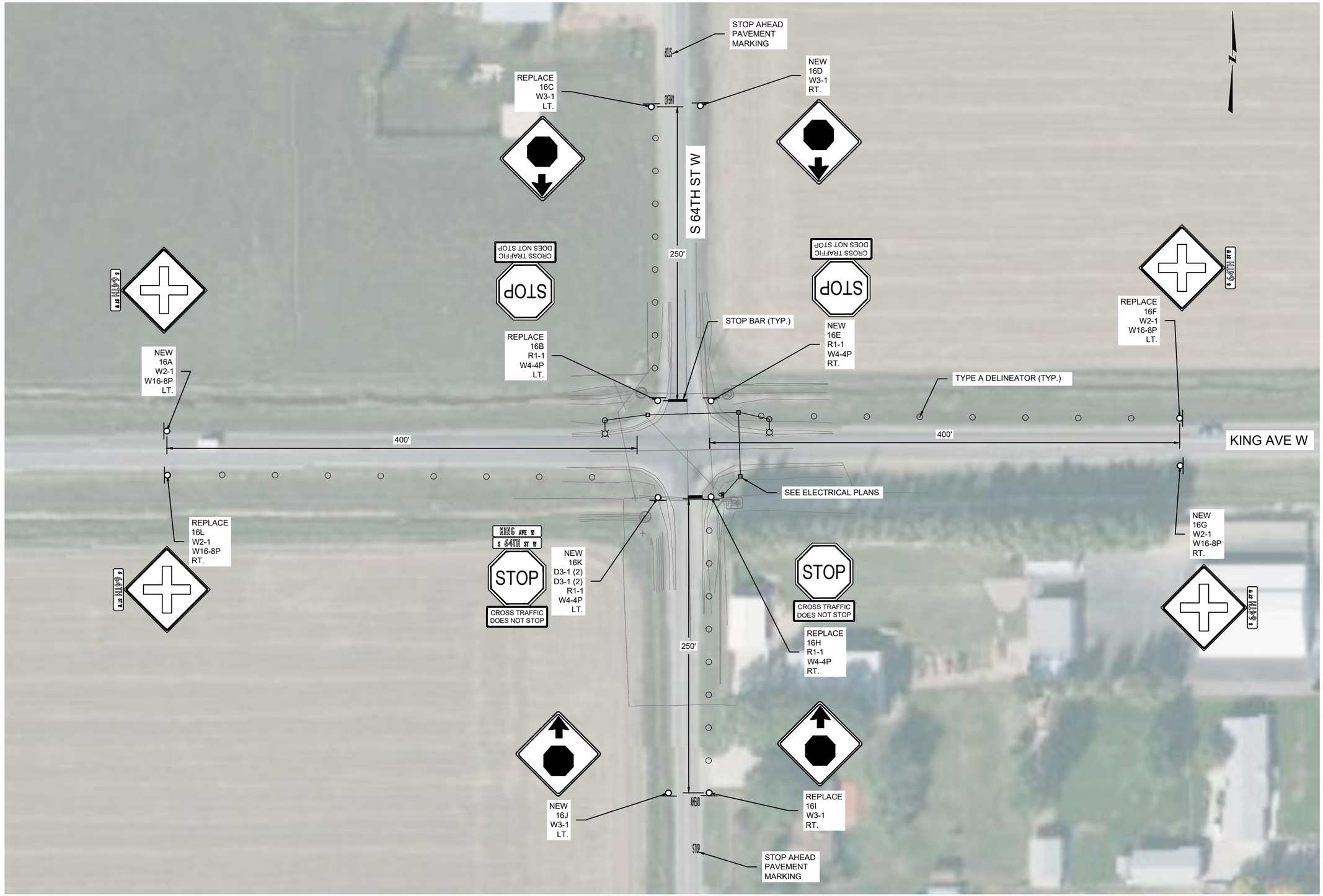

NOTE: LT. AND RT. SIGN ORIENTATION BASED FROM WEST TO EAST AND SOUTH TO NORTH

SHEET NO.
S23

SITE 16

PROJECT NAME: SF 189 SOUTH D5 SAFETY IMPRV
COUNTY: CARBON, STILLWATER, & YELLOWSTONE
PROJECT ID: HSIP STWD(817)
UPN: 9912000

CHECKED BY	RCL	03/04/2024
REVIEWED BY	LJF	03/01/2024
DESIGNED BY	SMM	02/29/2024

9912000SIPLNZ02.DWG

MONTANA Department of Transportation

SIGNING PLANS

3/7/2024 9:27 AM

ADVERTISED COPY

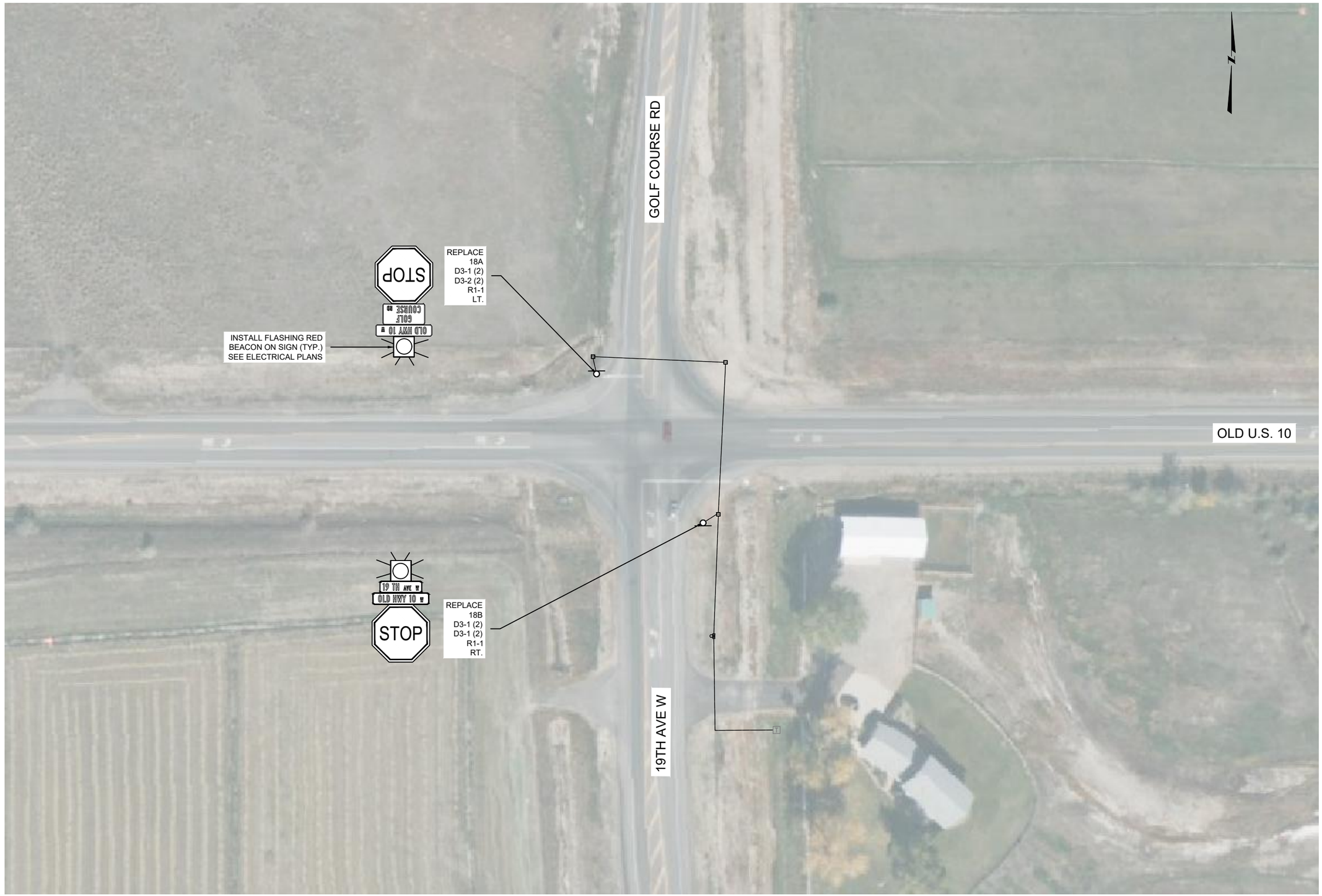

NOTE: LT. AND RT. SIGN ORIENTATION BASED
FROM WEST TO EAST AND SOUTH TO NORTH

SHEET NO.
S24

SITE 18

PROJECT NAME
SF 189 SOUTH D5 SAFETY IMPRV
COUNTY
CARBON, STILLWATER, & YELLOWSTONE
PROJECT ID
HSIP STWD(817)
UPN
9912000

CHECKED BY	RCL
REVIEWED BY	LJF
DESIGNED BY	SMM

03/04/2024
03/01/2024
02/29/2024

9912000S/PLNZ02.DWG

MONTANA
Department of Transportation

SIGNING PLANS

3/7/2024 9:27 AM

ADVERTISED COPY

ELECTRICAL QUANTITY SUMMARY

ITEM NO.	MATERIAL	UNIT	TOTAL	#1 SITE 1 OLD US10 & RAPELJE RD.	#2 SITE 2 S-308 CURVES	#3 SITE 4 LAUREL AIRPORT RD. & 72ND ST W	#4 SITE 10 NEIBAUER RD. & 48TH ST. W	#5 SITE 11 HESPER RD. & 72ND ST. W	#6 SITE 16 KING AVE. W & S 64TH ST. W	#7 SITE 18 OLD U.S.10 & 19TH AVE. W
616 343 920	CONDUIT - PLASTIC 2 IN	LNFT	2,105	245	0	175	825	215	240	405
616 783 007	PULL BOX - COMPOSITE TYPE 2	EACH	20	2	0	2	8	2	3	3
617 000 000	FOUNDATION - CONCRETE	CUYD	11	1.2	1.4	1.2	3.8	1.2	1.2	1.0
617 123 108	CONDUCTOR - COPPER 8 AWG - 600V	LNFT	5,355	515	0	370	2,415	445	505	1,105
617 123 110	CONDUCTOR - COPPER 10 AWG - 600V	LNFT	3,370	580	0	505	840	445	580	420
617 033 212	CABLE - COPPER 3AWG12 - 600V	LNFT	535	75	0	120	0	160	180	0
617 033 314	CABLE - COPPER 5AWG14 - 600V	LNFT	445	0	0	0	445	0	0	0
617 333 000	SERVICE ASSEMBLY - MODIFY	EACH	3	0	0	1	0	1	1	0
617 333 100	SERVICE ASSEMBLY	EACH	3	1	0	0	1	0	0	1
617 483 110	SIG-TRAF 1 COL-1 WAY-12	EACH	10	0	0	0	8	0	0	2
617 523 010	SOLAR SIG-TRAF 1 COLOR-1 WAY 12	EACH	3	0	3	0	0	0	0	0
617 183 056	STANDARD - STL TYPE 10-A-500-6	EACH	8	2	0	2	0	2	2	0
617 303 300	HIGH EFFICACY LUMINAIRE LED	EACH	8	2	0	2	0	2	2	0
617 673 200	SIG STANDARD TYPE I-200	EACH	13	0	3	0	8	0	0	2
617 763 410	RADAR VEHICLE DETECTION	EACH	9	0	3	0	4	0	0	2
617 781 000	REMOVE AND SALVAGE MISC ELECTRICAL	LS	1	0	0	0	0	1	1	0
617 909 110	SERVICE CONNECT	EACH	2	0	0	0	0	1	1	0

SHEET NO.
E1

ELECTRICAL DETAILS

PROJECT NAME
SF 189 SOUTH D5 SAFETY IMPRV
COUNTY
CARBON, STILLWATER, & YELLOWSTONE
PROJECT ID
HSIP STWD(817)
UPN
9912000

CHECKED BY RCL 03/04/2024
REVIEWED BY JAD 03/01/2024
DESIGNED BY TJH 02/29/2024

MONTANA
Department of Transportation

ELECTRICAL PLANS

3/5/2024 10:01 AM
9912000ELDETZ01.DWG

ADVERTISED COPY

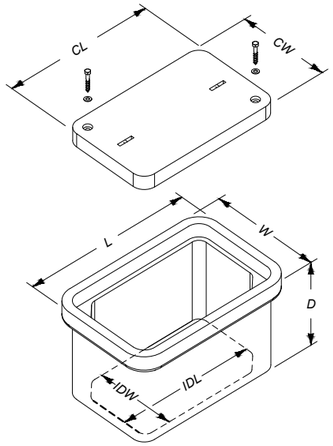

PULL BOX - COMPOSITE MINIMUM DIMENSIONS		
TYPE 1	**TYPE 2**	**TYPE 3**
L = 20"	L = 25"	L = 32"
W = 13"	W = 15"	W = 19"
D = 12"	D = 12"	D = 12"
I D L = 17"	I D L = 21"	I D L = 28"
I D W = 10"	I D W = 11"	I D W = 15"
C L = 18"	C L = 23"	C L = 30"
C W = 11"	C W = 13"	C W = 17"

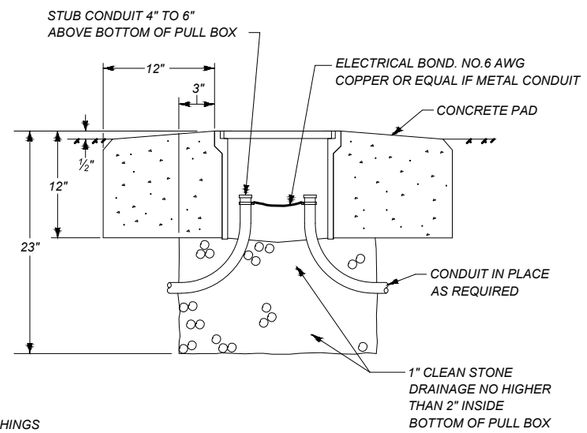

PULL BOX INSTALLED IN DIRT

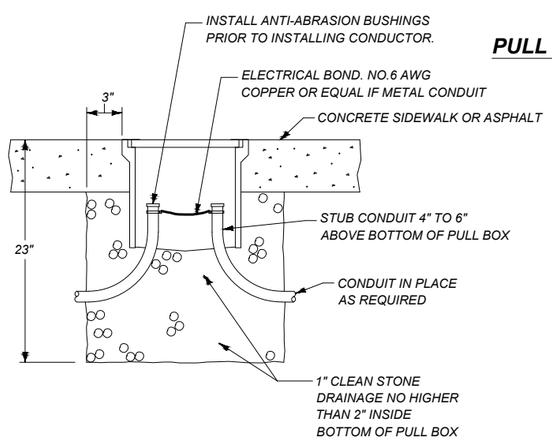

PULL BOX INSTALLED IN A SIDEWALK OR ASPHALT

PULL BOX-COMPOSITE

TYPE 1,2 & 3

NO SCALE

WATERTIGHT CONNECTORS

TYPES 1, 6, 11 & 16

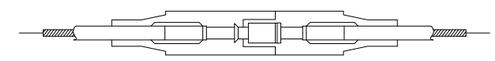

NON-FUSED BREAKAWAY

TYPES 2, 7, 12 & 17

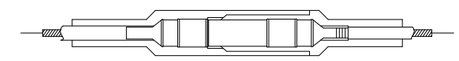

FUSED BREAKAWAY

IDENTITY NO.	DESCRIPTIVE SYMBOL & WIRE SIZES
1	8 — 8
2	8 — 10
3	8 / 8 — 10
4	8 / 8 — 8
5	8 / 8 — 8
6	6 — 6
7	6 — 10
8	6 / 6 — 10
9	6 / 6 — 6
10	6 / 6 — 6
11	4 — 4
12	4 — 10
13	4 / 4 — 10
14	4 / 4 — 4
15	4 / 4 — 4
16	10 — 10
17	10 — 10
18	10 / 10 — 10
19	10 / 10 — 10
20	10 / 10 — 10
21	VARIES / VARIES — VARIES

TYPES 3, 8, 13 & 18

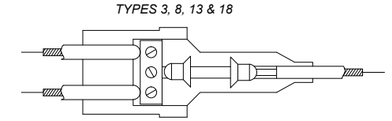

FUSED BREAKAWAY

TYPES 4, 9, 14 & 19

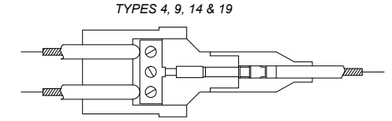

NON-FUSED BREAKAWAY

TYPES 5, 10, 15 & 20

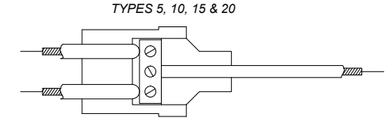

NON-FUSED NON-BREAKAWAY

TYPE 21

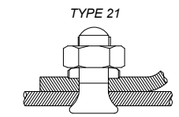

COPPER SPLIT BOLT -
MAKE WATERTIGHT USING
SELF ADHERING MASTIC

PROVIDE A PLUG AND RECEPTACLE HOUSED IN WATER-RESISTANT, SYNTHETIC RUBBER CAPABLE OF BURIAL IN THE GROUND OR INSTALLATION IN SUNLIGHT. THE HOUSING, CONSISTING OF 2 SECTIONS, PROVIDES A WATERTIGHT SEAL AROUND THE CABLE AND A WATERTIGHT SEAL BETWEEN THE TWO SECTIONS AT THE POINT OF DISCONNECTION. SUPPLY EACH KIT WITH SUFFICIENT SILICONE COMPOUND TO LUBRICATE METAL PARTS AND THE RUBBER HOUSINGS FOR EASY ASSEMBLY.

WHERE INDICATED, CRIMP A COPPER PIN AND A COPPER RECEPTACLE TO THE CABLE. THE RECEPTACLE IS TO ESTABLISH CONTACT PRESSURE WITH THE PIN THROUGH THE USE OF A COPPER BERYLLIUM SPRING AND BE EQUIPPED WITH A DISPOSABLE MOUNTING PIN. THE PIN IS TO BE CONSTRUCTED OF AT LEAST HALF-HARD MATERIAL. THE CRIMPING PORTION IS TO BE FULLY ANNEALED WHILE THE REST OF THE PIN IS MAINTAINED IN ITS ORIGINAL STATE OF HARDNESS. THE RECEPTACLE IS TO BE FULLY ANNEALED. THE PIN AND RECEPTACLE ARE TO LOCK TOGETHER SO THE CONNECTION IS MAINTAINED WHEN A MINIMUM FORCE OF 20 POUNDS TENSION IS APPLIED TO THE ATTACHED CABLES.

PROVIDE FUSED CONNECTOR KITS CONTAINING A PAIR OF SPRING LOADED 90% CONDUCTIVITY CONTACTS FOR GRIPPING A STANDARD MIDGET FERRULE TYPE FUSE. THE CONTACTS MUST BE FULLY ANNEALED AND ADAPTED TO BE CRIMPED TO THE CABLE.

WATERTIGHT CONNECTORS

NO SCALE

SHEET NO.
E2

ELECTRICAL DETAILS

PROJECT NAME: SF 189 SOUTH D5 SAFETY IMPRV
COUNTY: CARBON, STILLWATER, & YELLOWSTONE
PROJECT ID: HSIP STWD(817)
UPN: 9912000

CHECKED BY	RCL	03/04/2024
REVIEWED BY	JAD	03/01/2024
DESIGNED BY	TJH	02/29/2024

9912000ELDETZ01.DWG

MONTANA Department of Transportation

ELECTRICAL PLANS

3/5/2024 10:01 AM

ADVERTISED COPY

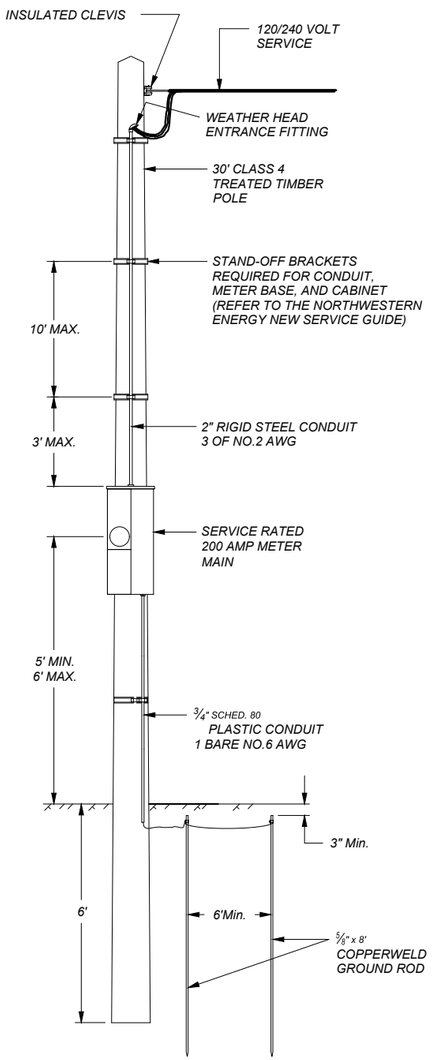

FRONT

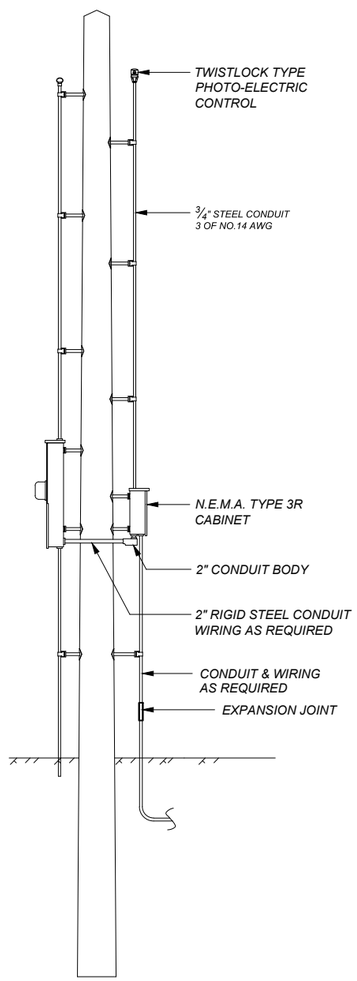

SIDE

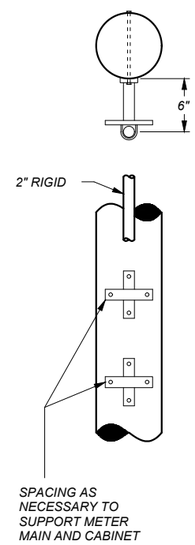

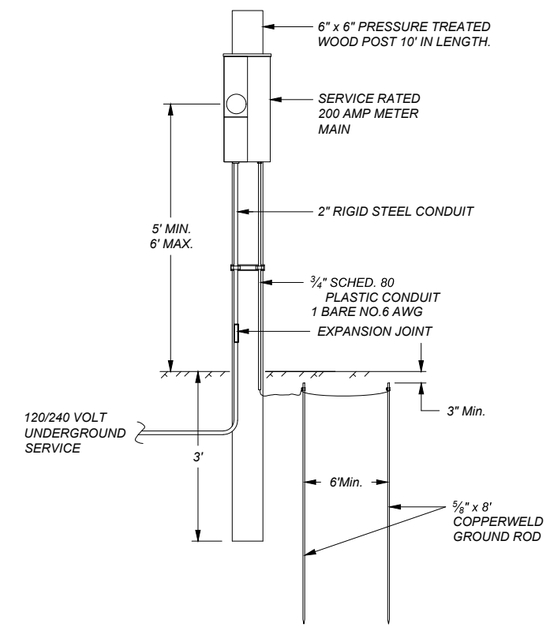

FRONT

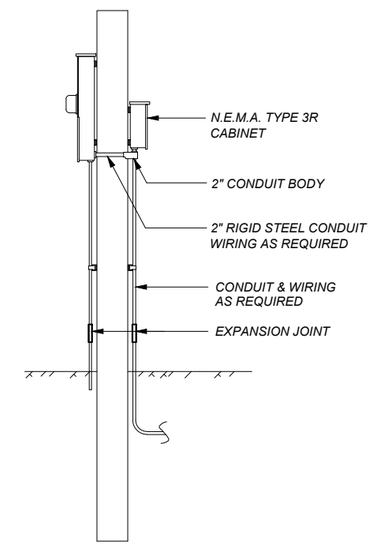

SIDE

UNDERGROUND SERVICE ASSEMBLY DETAIL

SERVICE ASSEMBLY DETAIL
WOOD POLE
NO SCALE

UNDERGROUND SERVICE
ASSEMBLY DETAIL
NO SCALE

SHEET NO.
E3

ELECTRICAL DETAILS

PROJECT NAME: SF 189 SOUTH D5 SAFETY IMPRV
COUNTY: CARBON, STILLWATER, & YELLOWSTONE
PROJECT ID: HSIP STWD(817)
UPN: 9912000

CHECKED BY	RCL	03/04/2024
REVIEWED BY	JAD	03/01/2024
DESIGNED BY	TJH	02/29/2024

9912000ELDETZ01.DWG

MONTANA Department of Transportation

ELECTRICAL PLANS

3/5/2024 10:01 AM

ADVERTISED COPY

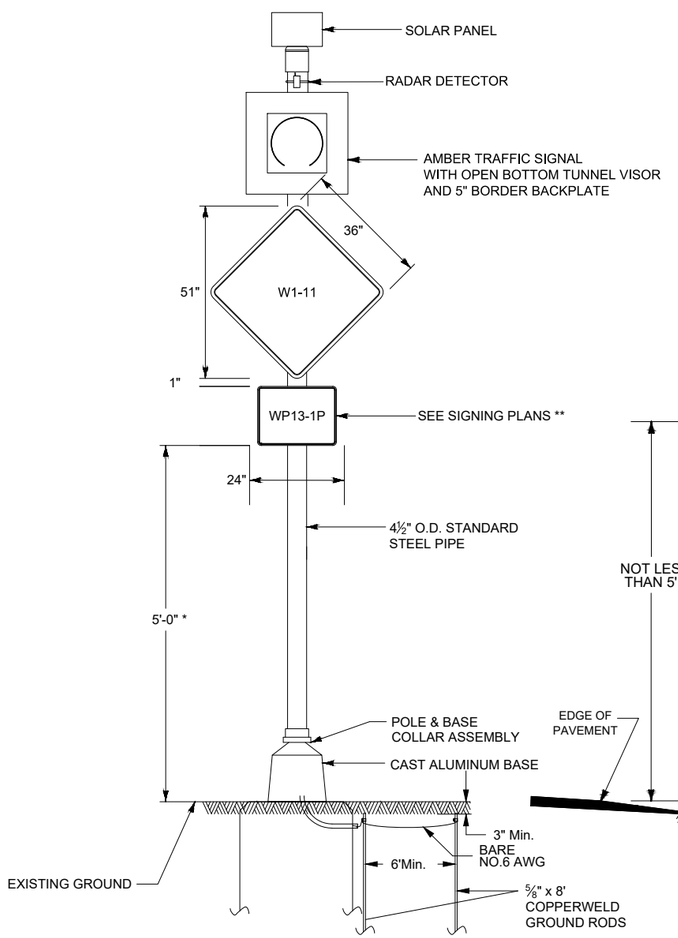

1 SOLAR POWERED

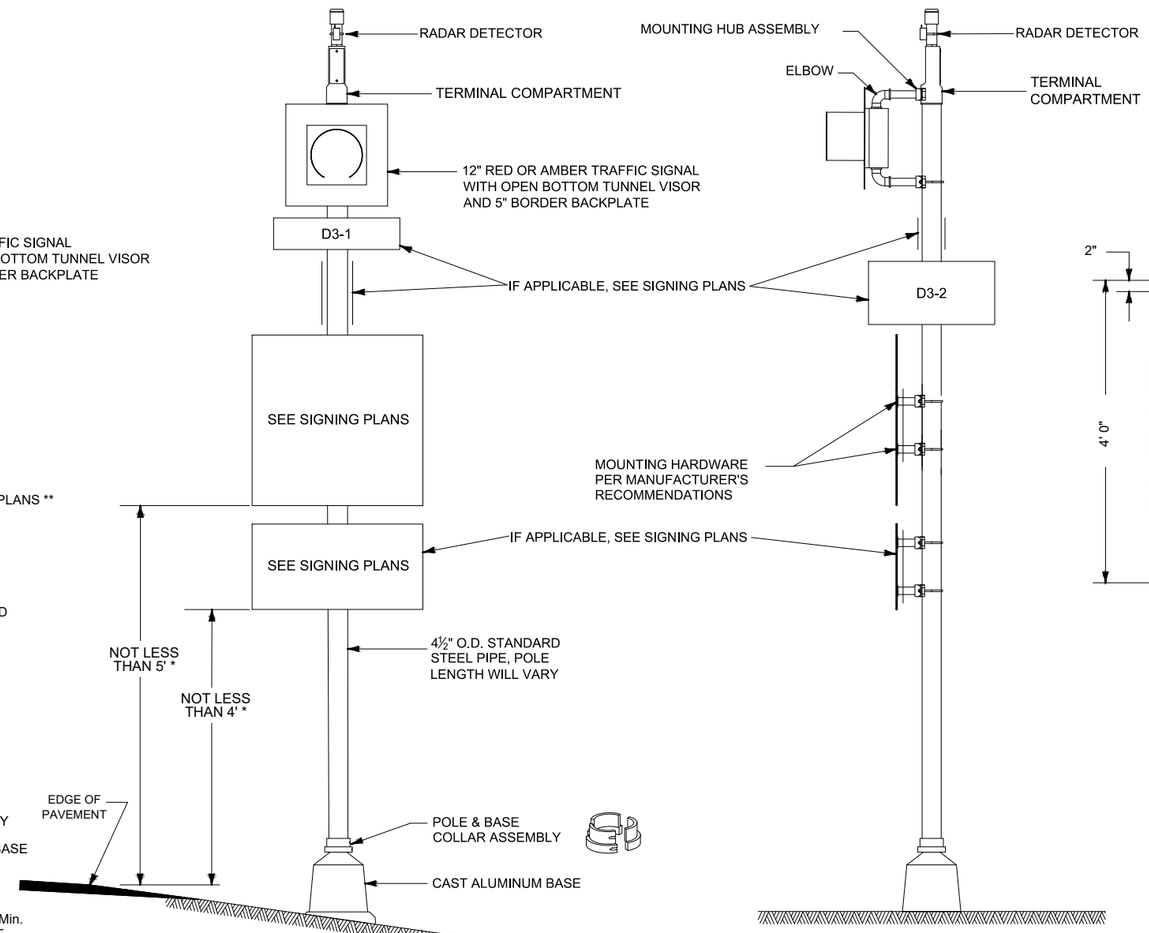

2 AC POWERED

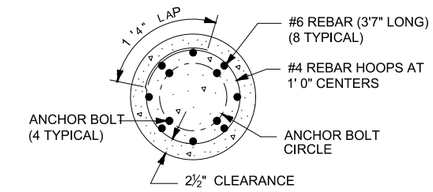

SECTION A-A

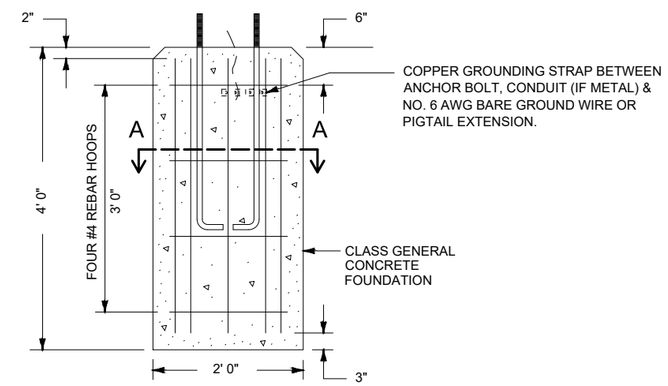

USE GRADE 60 REINFORCING STEEL

PROVIDE 10' MIN. SIGN CLEARANCE FROM EDGE OF PAVEMENT TO CLOSEST SIGN EDGE. DO NOT PLACE FOUNDATION IN TOE AND/OR FLOWLINE OF DITCH.

TRIM TOP OF PIPE TO MEET BEACON MOUNTING REQUIREMENTS.

NO PART OF THE FOUNDATION OR ANCHOR BOLTS MAY PROTRUDE MORE THAN 4" ABOVE GROUND AFTER BREAKAWAY.

*PROVIDE MOUNTING HEIGHT ABOVE FINISHED ROAD SURFACE. LENGTH OF SUPPORT SYSTEM WILL VARY BASED ON LOCATION AND CROSS-SLOPE OF NEW FINISHED GRADE. CONFIRM LENGTH WITH PROJECT MANAGER PRIOR TO ORDERING.

** SEE SIGN LOCATION AND SPECIFICATION SHEETS FOR MORE INFORMATION

SHEET NO.
E4

ELECTRICAL DETAILS

PROJECT NAME: SF 189 SOUTH D5 SAFETY IMPRV
COUNTY: CARBON, STILLWATER, & YELLOWSTONE
PROJECT ID: HSIP STWD(817)
UPN: 9912000

CHECKED BY	RCL	03/04/2024
REVIEWED BY	JAD	03/01/2024
DESIGNED BY	TJH	02/29/2024

9912000ELDETZ01.DWG

MONTANA
Department of Transportation

ELECTRICAL PLANS

3/5/2024 10:01 AM

ADVERTISED COPY

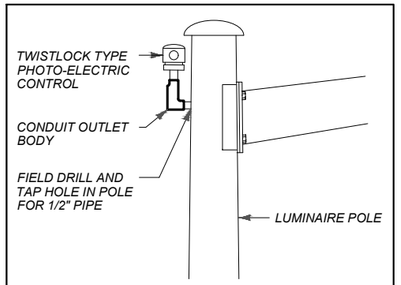

INSTALLATION DETAIL FOR PHOTO-ELECTRIC CONTROL

WELDING INSPECTION REQUIREMENTS:
25% OF ALL PARTIAL PENETRATION GROOVE AND FILLET WELDS PER PIECE REQUIRES MAGNETIC-PARTICLE TESTING PER AWS D1.1.

100% OF ALL FULL PENETRATION GROOVE WELDS, INCLUDING BASE CONNECTION WELD REQUIRE MAGNETIC-PARTICLE TESTING PER AWS D1.1.

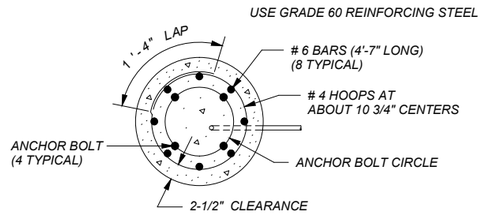

SECTION A-A

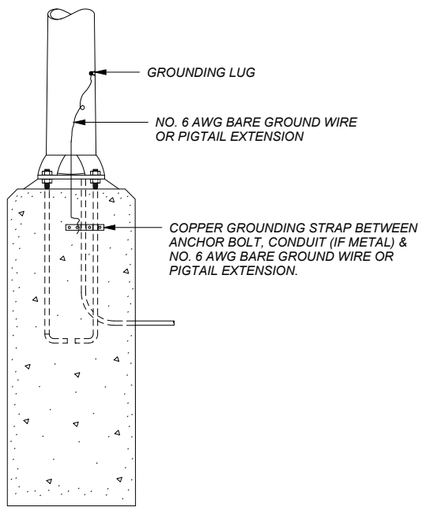

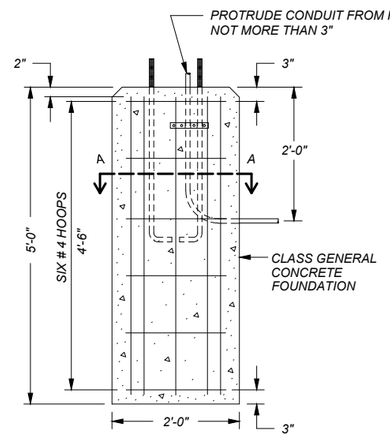

BASE PLATE REQUIREMENTS:
BASE PLATES TO BE 1" THICK AND MEET THE REQUIREMENTS OF AASHTO M270 GRADE 50. HOLES TO ACCEPT 1" DIA. ANCHOR BOLTS WITH A BOLT CIRCLE OF 13 1/2" FOR STANDARDS WITH 15 FT. ARMS AND A MOUNTING HEIGHT OF 40 FT. USE A BOLT CIRCLE OF 15" FOR STANDARDS WITH ARMS UP TO 25 FT. IN LENGTH AND MOUNTING HEIGHTS OF UP TO 45 FT.

TYPICAL OF ALL FOUNDATIONS

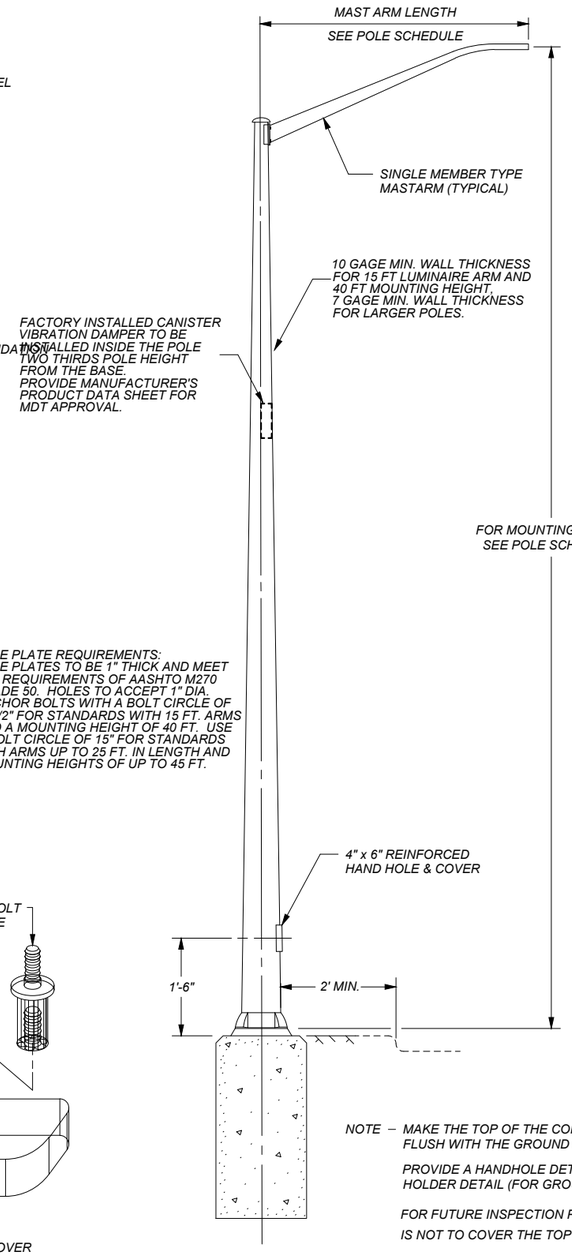

TYPE I0-A POLE

LUMINAIRE ARM CONNECTION REQUIRES 4 BOLT DESIGN WITH A325 BOLTS, NUTS AND WASHERS (FULLY TENSIONED)
TUBE TO PLATE CONNECTION TO BE SOCKET TYPE CONNECTION WITH TWO FILLET WELDS PER 14.4.4.6 OF THE SPECIFICATIONS.

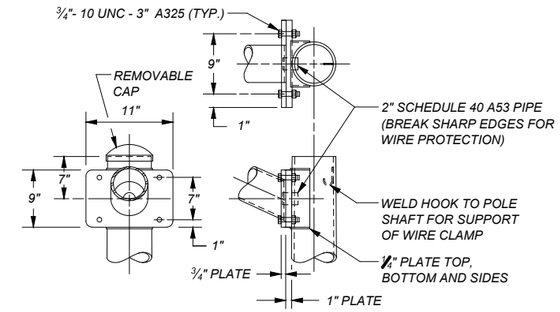

NOTE – FOR ARMS BETWEEN 16 FT. AND 25 FT. IN LENGTH, USE AN 11" SQUARE PLATE WITH A BOLT SPACING OF 9 IN. VERTICAL AND 9" HORIZONTAL

DESIGN, FABRICATE, ERECT, AND INSPECT STANDARDS IN ACCORDANCE WITH THE CURRENT EDITION AASHTO LRFD SPECIFICATIONS FOR STRUCTURAL SUPPORTS FOR HIGHWAY SIGNS, LUMINAIRES AND TRAFFIC SIGNALS (AND ANY AMENDMENTS THERETO).

DESIGN PARAMETERS:

DESIGN WEIGHT = DEAD LOAD, ICE.

DESIGN AREA = AREA WITH MAXIMUM WIND LOAD (WIND IS PERPENDICULAR TO STANDARD, AS SHOWN).

DIRECTIONAL FACTOR Kd = 0.95, GUST FACTOR = 1.14 DRAG COEFFICIENTS LFRD TABLE 3.8.7-1

HEIGHT AND EXPOSURE FACTOR Kz
zg = TAKEN AS 900 FEET FOR EXPOSURE C
α= 9.5
z = 16 FEET

DESIGN WIND VELOCITY 700 YEAR MRI BASIC WIND SPEED (115 MPH)

NOTE – MAKE THE TOP OF THE CONCRETE FOUNDATION FLUSH WITH THE GROUND LINE.

PROVIDE A HANDHOLE DETAIL AND A 1/2" NUT HOLDER DETAIL (FOR GROUNDING) .

FOR FUTURE INSPECTION PURPOSES, FILL MATERIAL IS NOT TO COVER THE TOP OF THE FOUNDATIONS

TYPE 10-A LUMINAIRE STANDARDS, POLE BASES & FOUNDATION DETAILS

NO SCALE

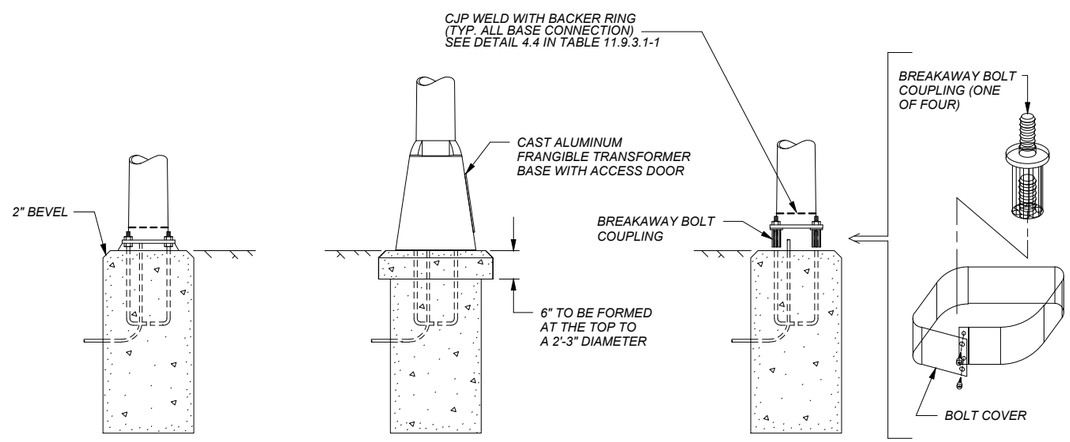

ANCHOR (DOUBLE NUT CONNECTION REQUIRED)

TRANSFORMER (BREAKAWAY TYPE)

BOLT COUPLING (BREAKAWAY TYPE)

BASE TYPES FOR LUMINAIRE STANDARDS

NOTE – INSTALL AND PRETENSION ANCHOR BOLTS PER THE STANDARD SPECIFICATIONS

LS
REVISED 18-NOV-2022

SHEET NO.
E5

ELECTRICAL DETAILS

PROJECT NAME: SF 189 SOUTH D5 SAFETY IMPRV
COUNTY: CARBON, STILLWATER, & YELLOWSTONE
PROJECT ID: HSIP STWD(817)
UPN: 9912000

CHECKED BY	RCL	03/04/2024
REVIEWED BY	JAD	03/01/2024
DESIGNED BY	TJH	02/29/2024

9912000ELDETZ01.DWG

MONTANA Department of Transportation

ELECTRICAL PLANS

3/5/2024 10:01 AM

ADVERTISED COPY

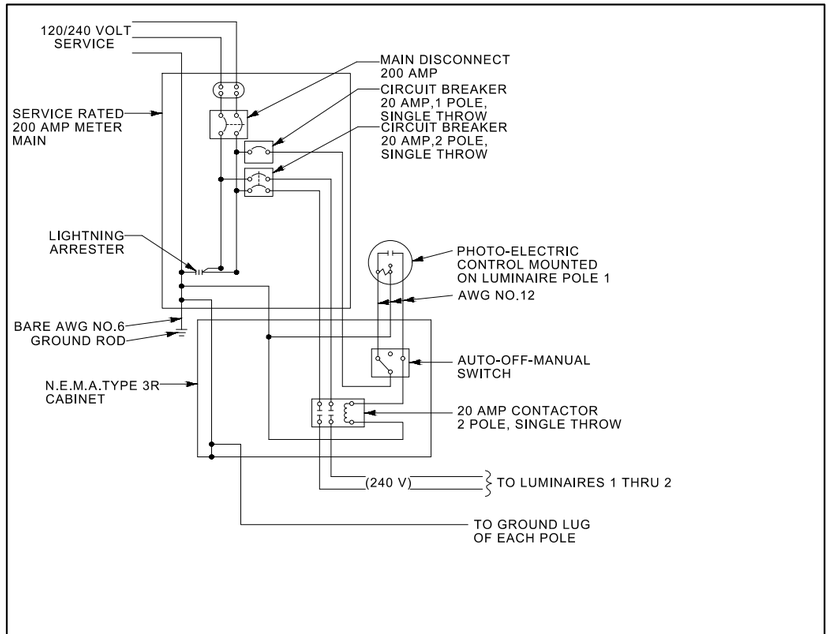

LUM SERVICE WIRING DIAGRAM (S-1)

LEGEND

- AWG NO. 12
- AWG NO. 10
- AWG NO. 8
- 5 AWG NO. 14

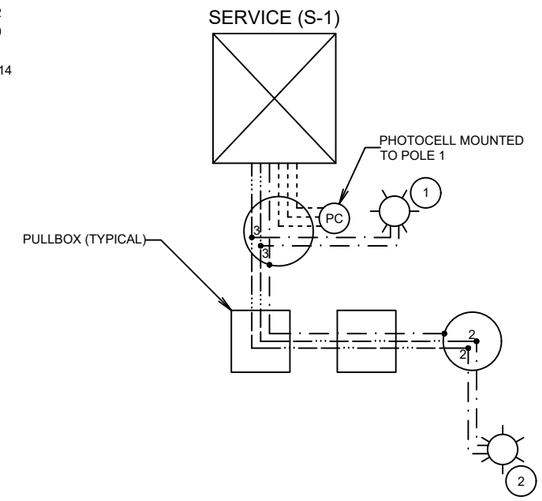

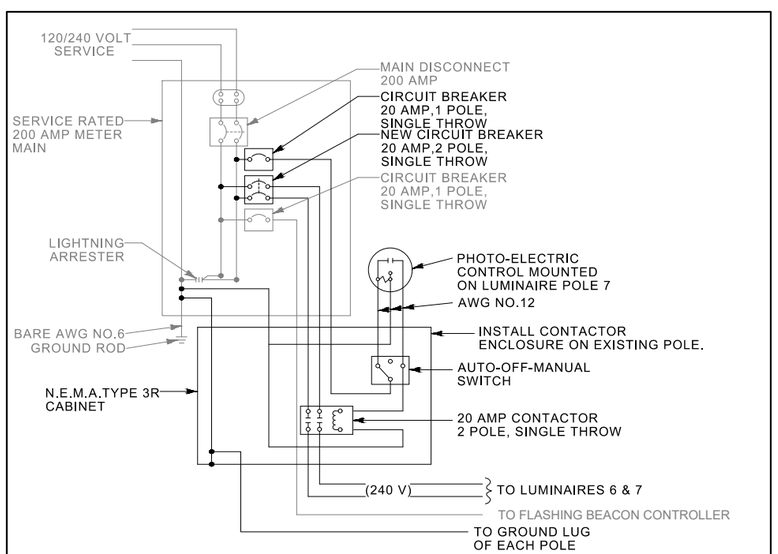

EXISTING SERVICE WIRING DIAGRAM (S-2)

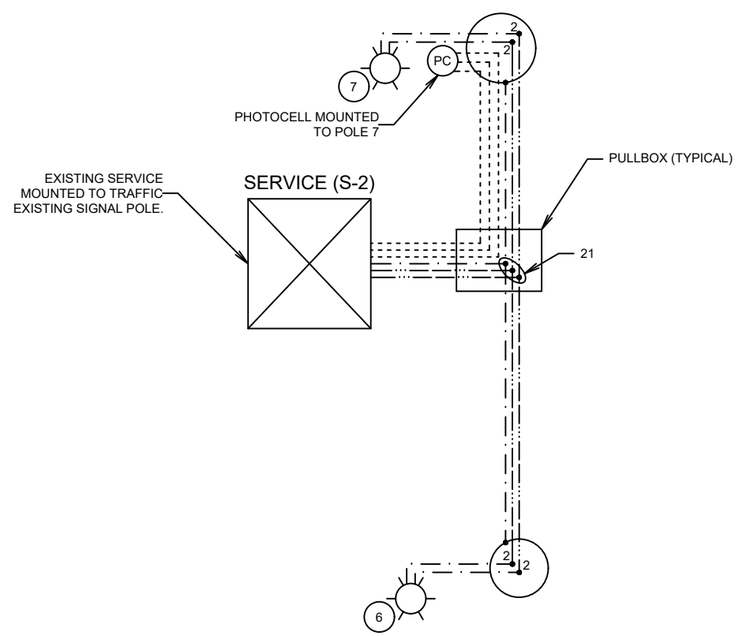

# INDICATES WATERTIGHT CONNECTOR PER DETAIL ON THIS SHEET. UTILIZE FUSES RATED AT 6 AMPS. WIRE NUTS ARE NOT ACCEPTABLE. UTILIZE NO.10 AWG LIGHT DROPS TO WATERTIGHT CONNECTORS IN POLE BASE (TYP.)

ALL CIRCUITS FROM S-2A AND S-2B TO BE LABELED IN ACCORDANCE WITH NATIONAL ELECTRIC CODE (NEC) AND CITY OF BILLINGS REQUIREMENTS FOR EQUIPMENT FED FROM MULTIPLE SOURCES.

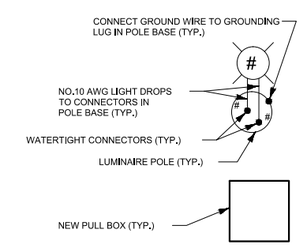

SHEET NO.
E6

ELECTRICAL DETAILS

PROJECT NAME: SF 189 SOUTH D5 SAFETY IMPRV
COUNTY: CARBON, STILLWATER, & YELLOWSTONE
PROJECT ID: HSIP STWD(817)
UPN: 9912000

CHECKED BY	RCL	03/04/2024
REVIEWED BY	JAD	03/01/2024
DESIGNED BY	TJH	02/29/2024

9912000ELDETZ01.DWG

MONTANA Department of Transportation

ELECTRICAL PLANS

3/5/2024 10:01 AM

ADVERTISED COPY

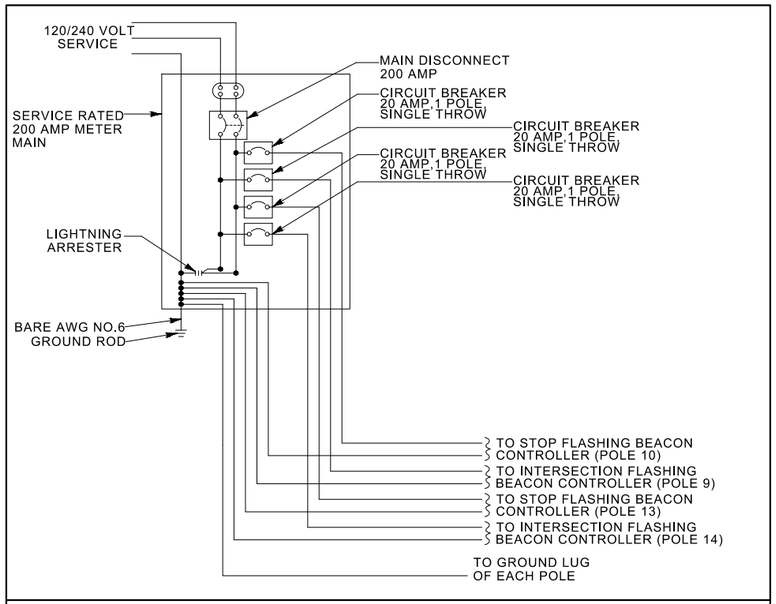

SERVICE WIRING DIAGRAM (S-3)

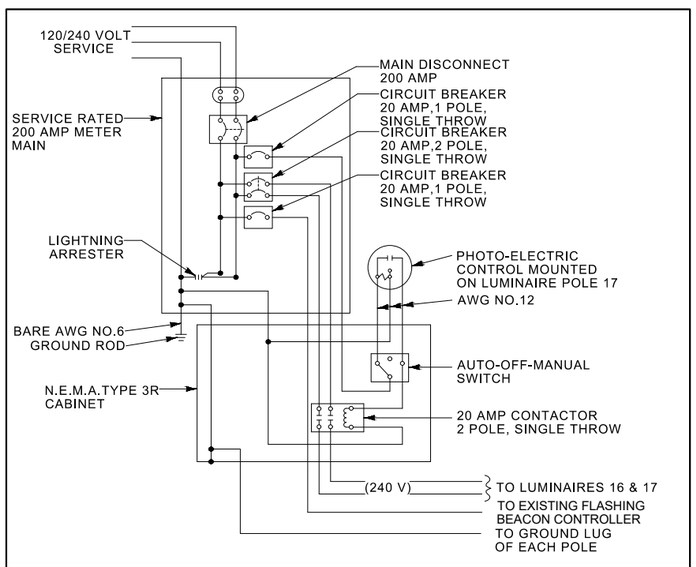

SERVICE WIRING DIAGRAM (S-4)

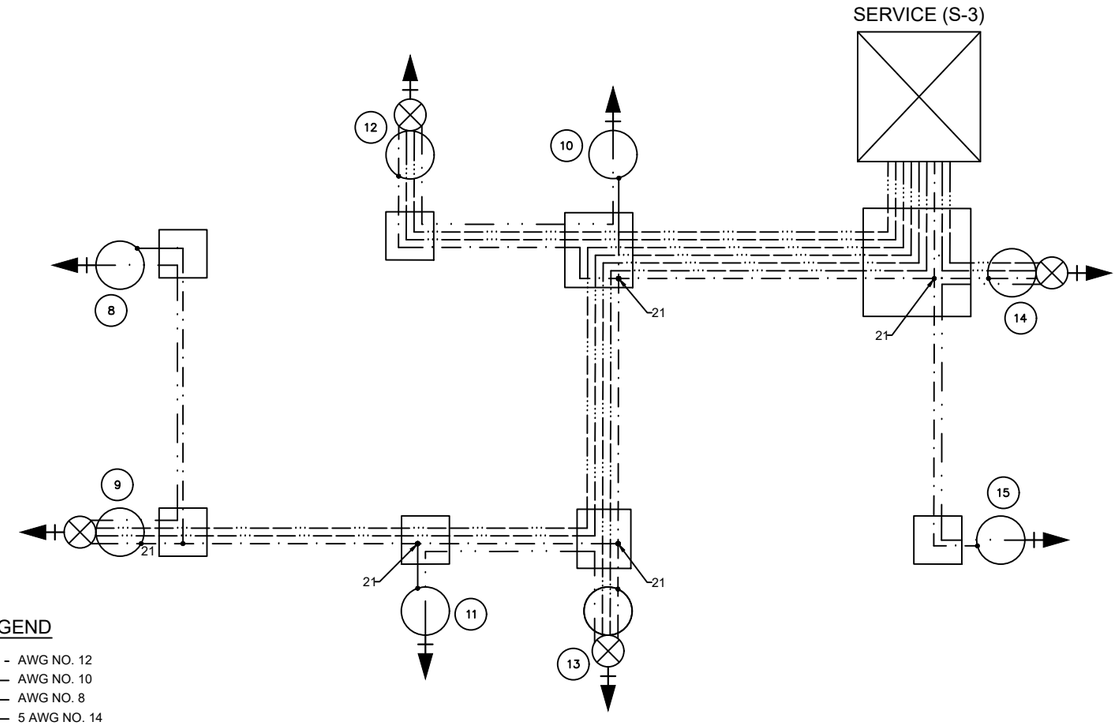

LEGEND

- AWG NO. 12
- AWG NO. 10
- AWG NO. 8
- 5 AWG NO. 14

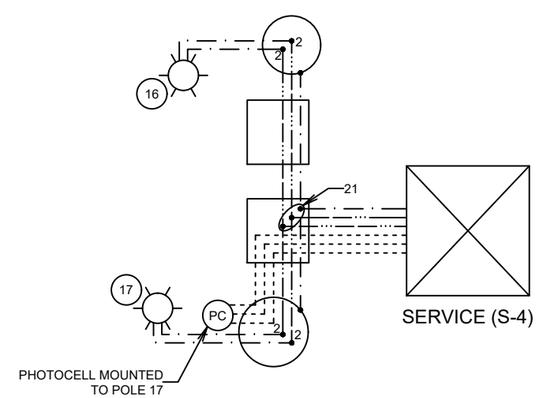

SHEET NO.
E7

ELECTRICAL DETAILS

PROJECT NAME: SF 189 SOUTH D5 SAFETY IMPRV
COUNTY: CARBON, STILLWATER, & YELLOWSTONE
PROJECT ID: HSIP STWD(817)
UPN: 9912000

CHECKED BY	RCL	03/04/2024
REVIEWED BY	JAD	03/01/2024
DESIGNED BY	TJH	02/29/2024

9912000ELDETZ01.DWG

MONTANA Department of Transportation

ELECTRICAL PLANS

3/5/2024 10:01 AM

ADVERTISED COPY

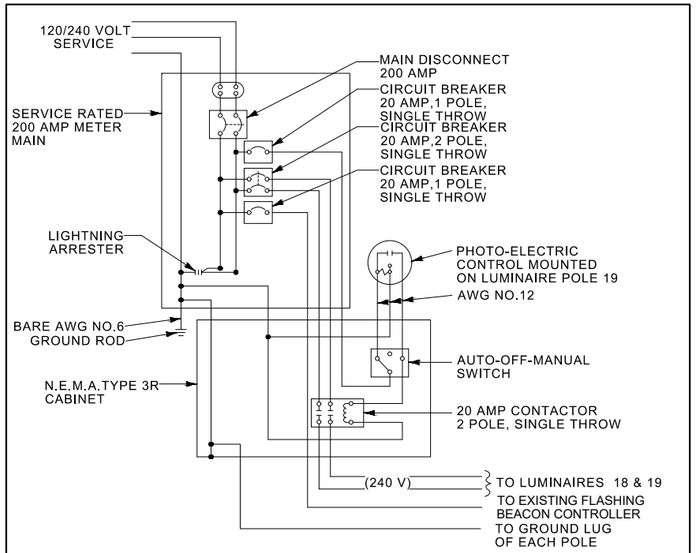

SERVICE WIRING DIAGRAM (S-5)

LEGEND

- AWG NO. 12
- AWG NO. 10
- AWG NO. 8
- 5 AWG NO. 14

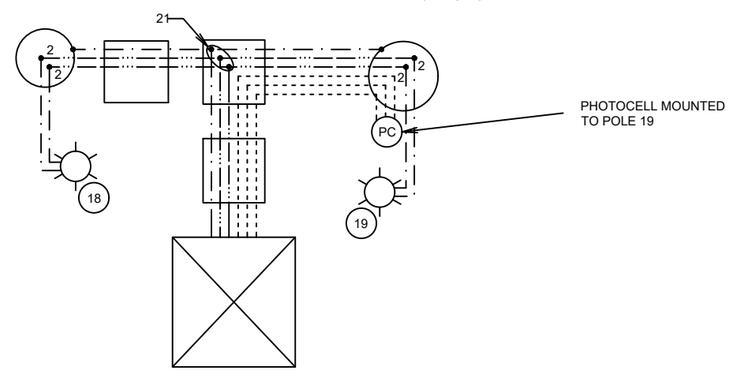

SERVICE (S-5)

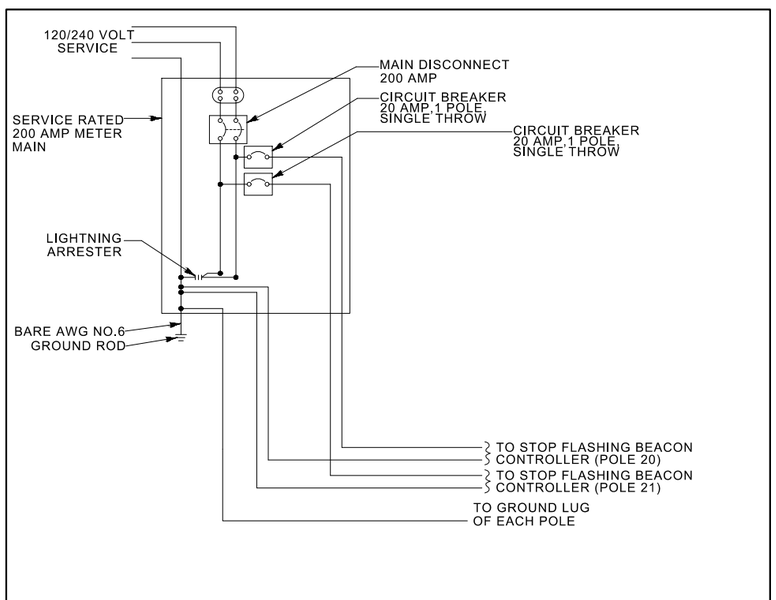

SERVICE WIRING DIAGRAM (S-6)

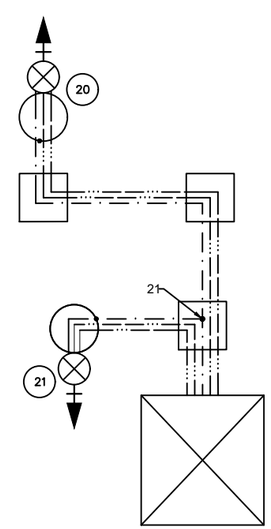

SERVICE (S-6)

SHEET NO.
E8

ELECTRICAL DETAILS

PROJECT NAME
SF 189 SOUTH D5 SAFETY IMPRV
COUNTY
CARBON, STILLWATER, & YELLOWSTONE
PROJECT ID
HSIP STWD(817)
UPN
9912000

CHECKED BY	RCL	03/04/2024
REVIEWED BY	JAD	03/01/2024
DESIGNED BY	TJH	02/29/2024

9912000ELDETZ01.DWG

MONTANA Department of Transportation

ELECTRICAL PLANS

3/5/2024 10:01 AM

ADVERTISED COPY

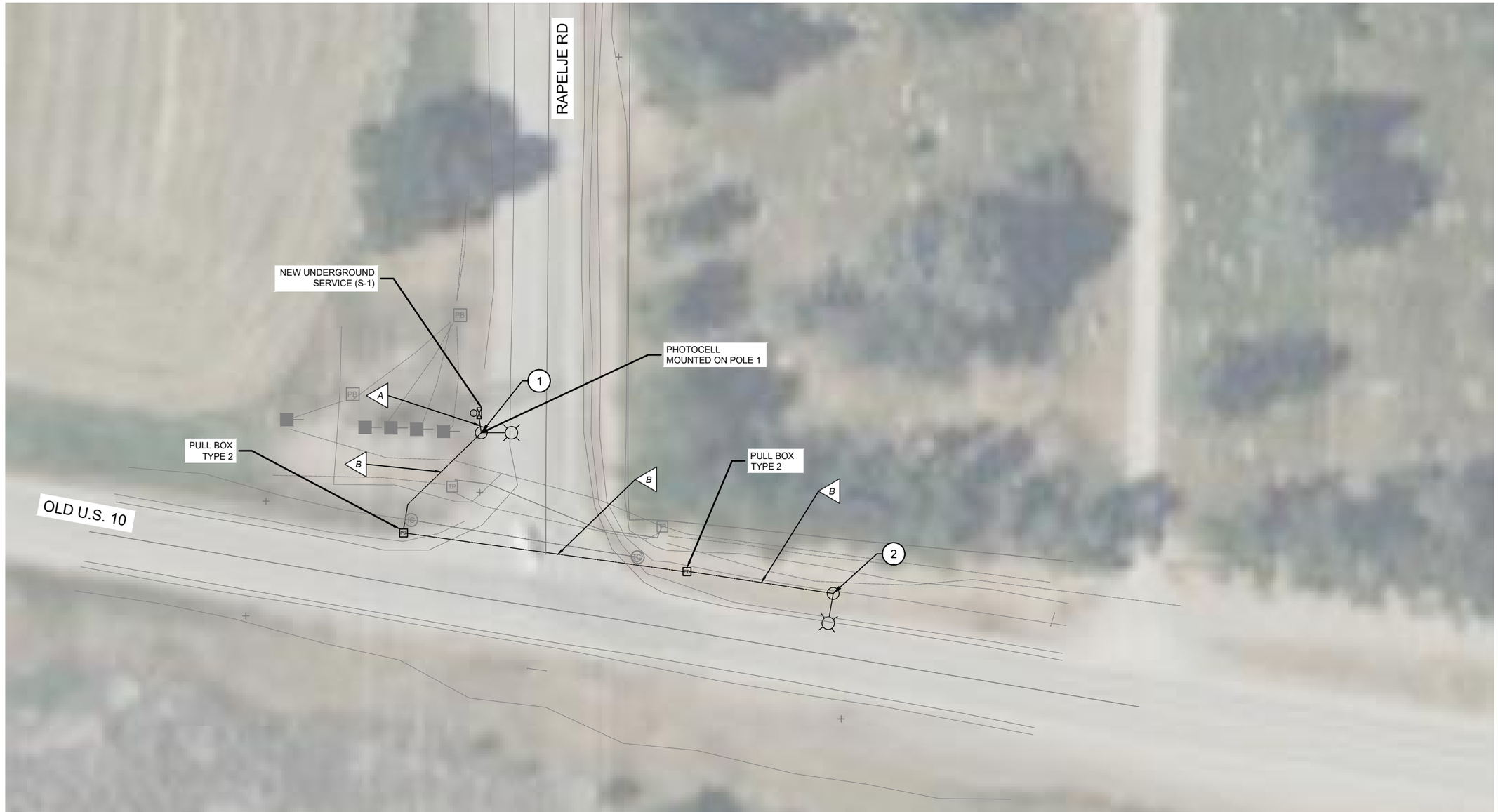

POLE SCHEDULE

POLE NO.	POLE TYPE	NORTHING	EASTING	ATTACHMENTS	LUMINAIRE MOUNTING HEIGHT X MAST ARM LENGTH	FOUNDATION DIA. X DEPTH	TYPE POLE BASE
1	10-A-500-6	507441.8879'	2026172.4372'	6	40' X 15'	2' X 5'	BREAKAWAY
2	10-A-500-6	507381.4568'	2026304.7508'	6	40' X 15'	2' X 5'	BREAKAWAY

NOTES:
1. 12" RED FLASHING BEACON
2. AC FLASHING BEACON CONTROLLLER
3. RADAR VEHICLE DETECTION
4. 12" AMBER FLASHING BEACON
5. SOLAR FLASHING BEACON CONTROLLER
6. 17,600 LUMEN TYPE 3 LUMINAIRE

CONDUIT & WIRING SCHEDULE

A	1 OF 2 IN PLASTIC CONDUIT 2 OF AWG NO. 8 CONDUCTOR 1 OF 3 AWG NO. 12 CABLE 1 OF AWG NO. 10 CONDUCTOR	 (LIGHTING) (PHOTOCELL) (GROUND)
B	1 OF 2 IN PLASTIC CONDUIT 2 OF AWG NO. 8 CONDUCTOR 1 OF AWG NO. 10 CONDUCTOR	 (LIGHTING) (GROUND)

SHEET NO.
E9

SITE 1

PROJECT NAME
SF 189 SOUTH D5 SAFETY IMPRV
COUNTY
CARBON, STILLWATER, & YELLOWSTONE
PROJECT ID
HSIP STWD(817)
UPN
9912000

CHECKED BY	RCL	03/04/2024
REVIEWED BY	JAD	03/01/2024
DESIGNED BY	TJH	02/29/2024

9912000ELPLNZ01.DWG

MONTANA
Department of Transportation

ELECTRICAL PLANS

3/5/2024 10:03 AM

ADVERTISED COPY

POLE SCHEDULE

POLE NO.	POLE TYPE	NORTHING	EASTING	ATTACHMENTS	LUMINAIRE MOUNTING HEIGHT X MAST ARM LENGTH	FOUNDATION DIA. X DEPTH	TYPE POLE BASE
3	I-200	336721.2178'	2043314.6373'	3, 4, 5	-	2' X 4'-0"	FRANGIBLE
4	I-200	336336.5526'	2042925.1869'	3, 4, 5	-	2' X 4'-0"	FRANGIBLE
5	I-200	335862.6773'	2041964.2034'	3, 4, 5	-	2' X 4'-0"	FRANGIBLE

NOTES:
1. 12" RED FLASHING BEACON
2. AC FLASHING BEACON CONTROLLLER
3. RADAR VEHICLE DETECTION
4. 12" AMBER FLASHING BEACON
5. SOLAR FLASHING BEACON CONTROLLER
6. 17,600 LUMEN TYPE 3 LUMINAIRE

SEE SIGNING PLANS FOR SIGN, PLACEMENT, AND ORIENTATION INFORMATION

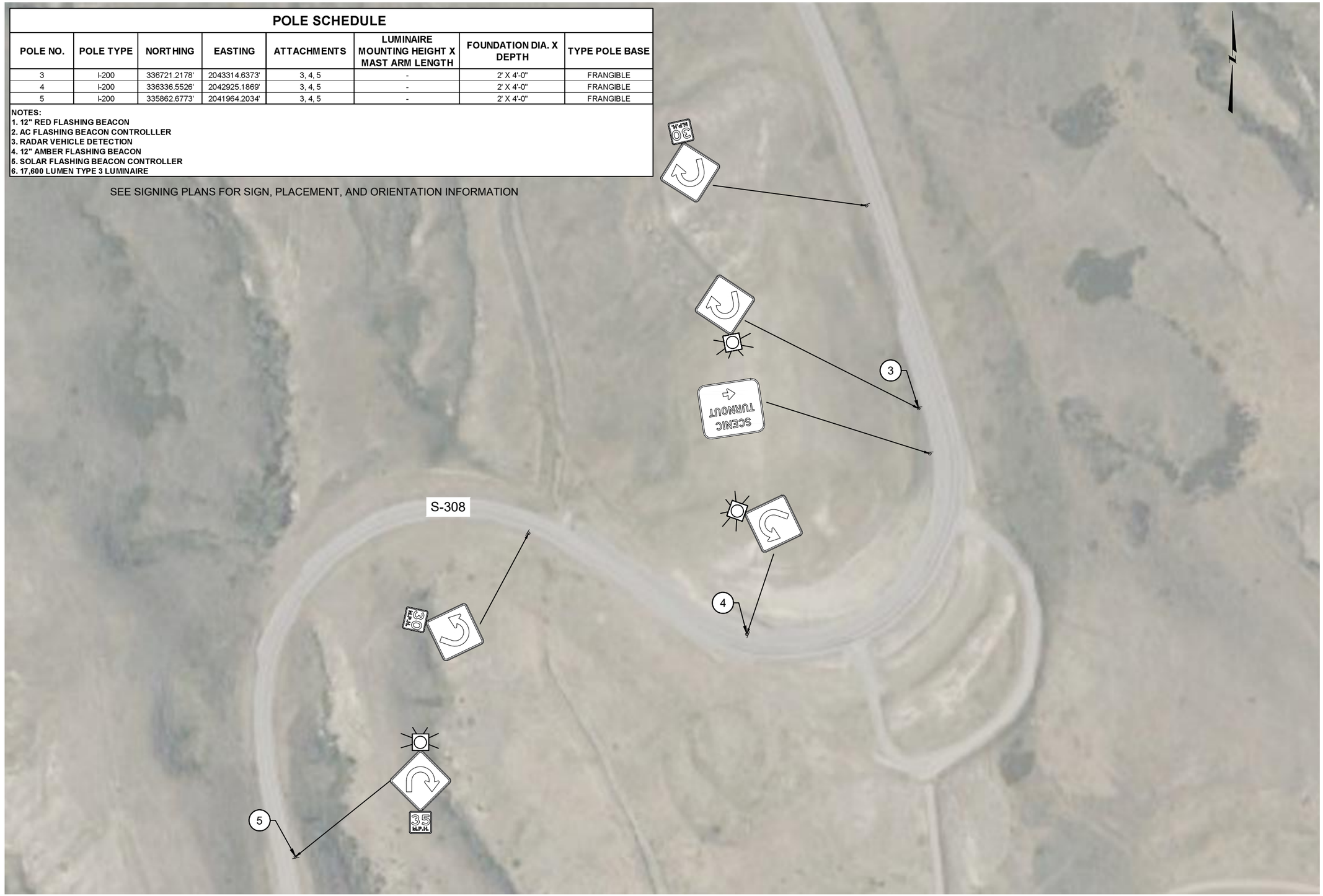

SHEET NO.
E10

SITE 2

PROJECT NAME
SF 189 SOUTH D5 SAFETY IMPRV
COUNTY
CARBON, STILLWATER, & YELLOWSTONE
PROJECT ID
HSIP STWD(817)
UPN
9912000

CHECKED BY	RCL	03/04/2024
REVIEWED BY	JAD	03/01/2024
DESIGNED BY	TJH	02/29/2024

9912000ELPLNZ01.DWG

MONTANA Department of Transportation

ELECTRICAL PLANS

3/5/2024 10:03 AM

ADVERTISED COPY

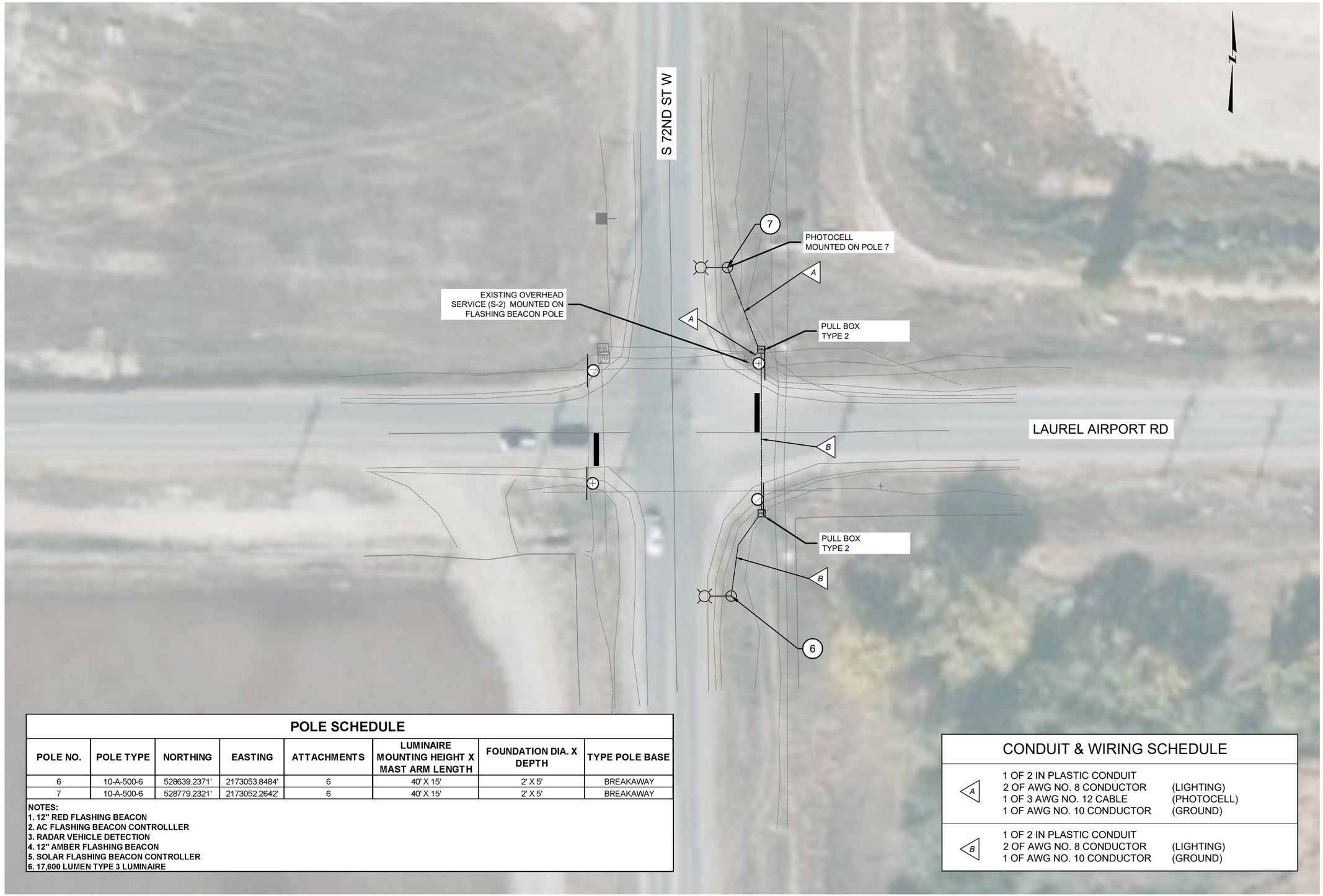

POLE SCHEDULE

POLE NO.	POLE TYPE	NORTHING	EASTING	ATTACHMENTS	LUMINAIRE MOUNTING HEIGHT X MAST ARM LENGTH	FOUNDATION DIA. X DEPTH	TYPE POLE BASE
6	10-A-500-6	528639.2371'	2173053.8484'	6	40' X 15'	2' X 5'	BREAKAWAY
7	10-A-500-6	528779.2321'	2173052.2642'	6	40' X 15'	2' X 5'	BREAKAWAY

NOTES:
1. 12" RED FLASHING BEACON
2. AC FLASHING BEACON CONTROLLER
3. RADAR VEHICLE DETECTION
4. 12" AMBER FLASHING BEACON
5. SOLAR FLASHING BEACON CONTROLLER
6. 17,600 LUMEN TYPE 3 LUMINAIRE

CONDUIT & WIRING SCHEDULE

A	1 OF 2 IN PLASTIC CONDUIT 2 OF AWG NO. 8 CONDUCTOR 1 OF 3 AWG NO. 12 CABLE 1 OF AWG NO. 10 CONDUCTOR	 (LIGHTING) (PHOTOCELL) (GROUND)
B	1 OF 2 IN PLASTIC CONDUIT 2 OF AWG NO. 8 CONDUCTOR 1 OF AWG NO. 10 CONDUCTOR	 (LIGHTING) (GROUND)

SHEET NO.
E11

SITE 4

PROJECT NAME
SF 189 SOUTH D5 SAFETY IMPRV

COUNTY
CARBON, STILLWATER, & YELLOWSTONE

PROJECT ID
HSIP STWD(817)

UPN
9912000

CHECKED BY	RCL	03/04/2024
REVIEWED BY	JAD	03/01/2024
DESIGNED BY	TJH	02/29/2024

9912000ELPLNZ01.DWG

MONTANA
Department of Transportation

ELECTRICAL PLANS

3/5/2024 10:03 AM

ADVERTISED COPY

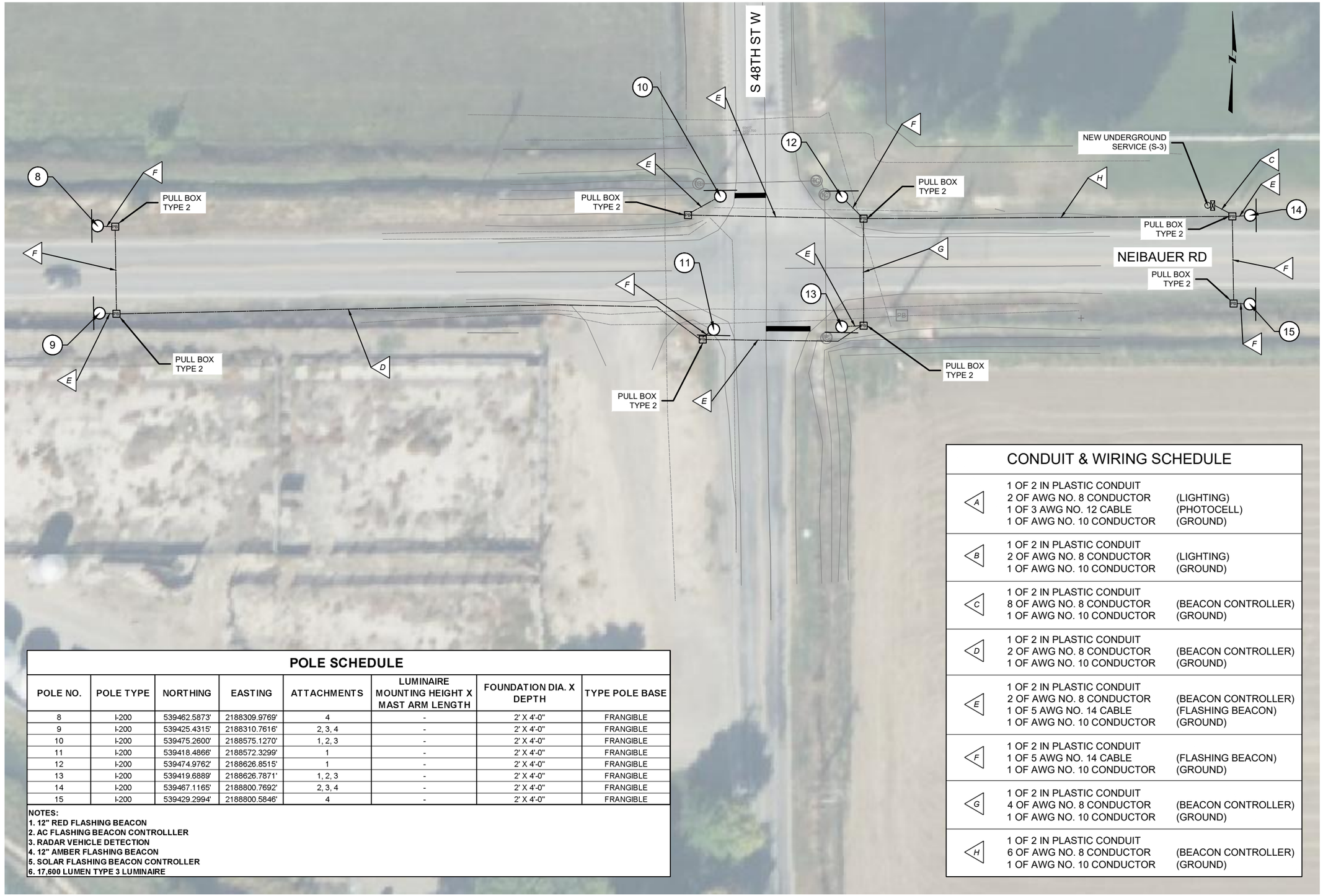

POLE SCHEDULE

POLE NO.	POLE TYPE	NORTHING	EASTING	ATTACHMENTS	LUMINAIRE MOUNTING HEIGHT X MAST ARM LENGTH	FOUNDATION DIA. X DEPTH	TYPE POLE BASE
8	I-200	539462.5873'	2188309.9769'	4	-	2' X 4'-0"	FRANGIBLE
9	I-200	539425.4315'	2188310.7616'	2, 3, 4	-	2' X 4'-0"	FRANGIBLE
10	I-200	539475.2600'	2188575.1270'	1, 2, 3	-	2' X 4'-0"	FRANGIBLE
11	I-200	539418.4866'	2188572.3299'	1	-	2' X 4'-0"	FRANGIBLE
12	I-200	539474.9762'	2188626.8515'	1	-	2' X 4'-0"	FRANGIBLE
13	I-200	539419.6889'	2188626.7871'	1, 2, 3	-	2' X 4'-0"	FRANGIBLE
14	I-200	539467.1165'	2188800.7692'	2, 3, 4	-	2' X 4'-0"	FRANGIBLE
15	I-200	539429.2994'	2188800.5846'	4	-	2' X 4'-0"	FRANGIBLE

NOTES:
1. 12" RED FLASHING BEACON
2. AC FLASHING BEACON CONTROLLLER
3. RADAR VEHICLE DETECTION
4. 12" AMBER FLASHING BEACON
5. SOLAR FLASHING BEACON CONTROLLER
6. 17,600 LUMEN TYPE 3 LUMINAIRE

CONDUIT & WIRING SCHEDULE

A	1 OF 2 IN PLASTIC CONDUIT 2 OF AWG NO. 8 CONDUCTOR 1 OF 3 AWG NO. 12 CABLE 1 OF AWG NO. 10 CONDUCTOR	(LIGHTING) (PHOTOCELL) (GROUND)
B	1 OF 2 IN PLASTIC CONDUIT 2 OF AWG NO. 8 CONDUCTOR 1 OF AWG NO. 10 CONDUCTOR	(LIGHTING) (GROUND)
C	1 OF 2 IN PLASTIC CONDUIT 8 OF AWG NO. 8 CONDUCTOR 1 OF AWG NO. 10 CONDUCTOR	(BEACON CONTROLLER) (GROUND)
D	1 OF 2 IN PLASTIC CONDUIT 2 OF AWG NO. 8 CONDUCTOR 1 OF AWG NO. 10 CONDUCTOR	(BEACON CONTROLLER) (GROUND)
E	1 OF 2 IN PLASTIC CONDUIT 2 OF AWG NO. 8 CONDUCTOR 1 OF 5 AWG NO. 14 CABLE 1 OF AWG NO. 10 CONDUCTOR	(BEACON CONTROLLER) (FLASHING BEACON) (GROUND)
F	1 OF 2 IN PLASTIC CONDUIT 1 OF 5 AWG NO. 14 CABLE 1 OF AWG NO. 10 CONDUCTOR	(FLASHING BEACON) (GROUND)
G	1 OF 2 IN PLASTIC CONDUIT 4 OF AWG NO. 8 CONDUCTOR 1 OF AWG NO. 10 CONDUCTOR	(BEACON CONTROLLER) (GROUND)
H	1 OF 2 IN PLASTIC CONDUIT 6 OF AWG NO. 8 CONDUCTOR 1 OF AWG NO. 10 CONDUCTOR	(BEACON CONTROLLER) (GROUND)

SHEET NO.
E12

SITE 10

PROJECT NAME
SF 189 SOUTH D5 SAFETY IMPRV

COUNTY
CARBON, STILLWATER, & YELLOWSTONE

PROJECT ID
HSIP STWD(817)

UPN
9912000

CHECKED BY	RCL	03/04/2024
REVIEWED BY	JAD	03/01/2024
DESIGNED BY	TJH	02/29/2024

9912000ELPLNZ02.DWG

MONTANA
Department of Transportation

ELECTRICAL PLANS

3/4/2024 5:13 PM

ADVERTISED COPY

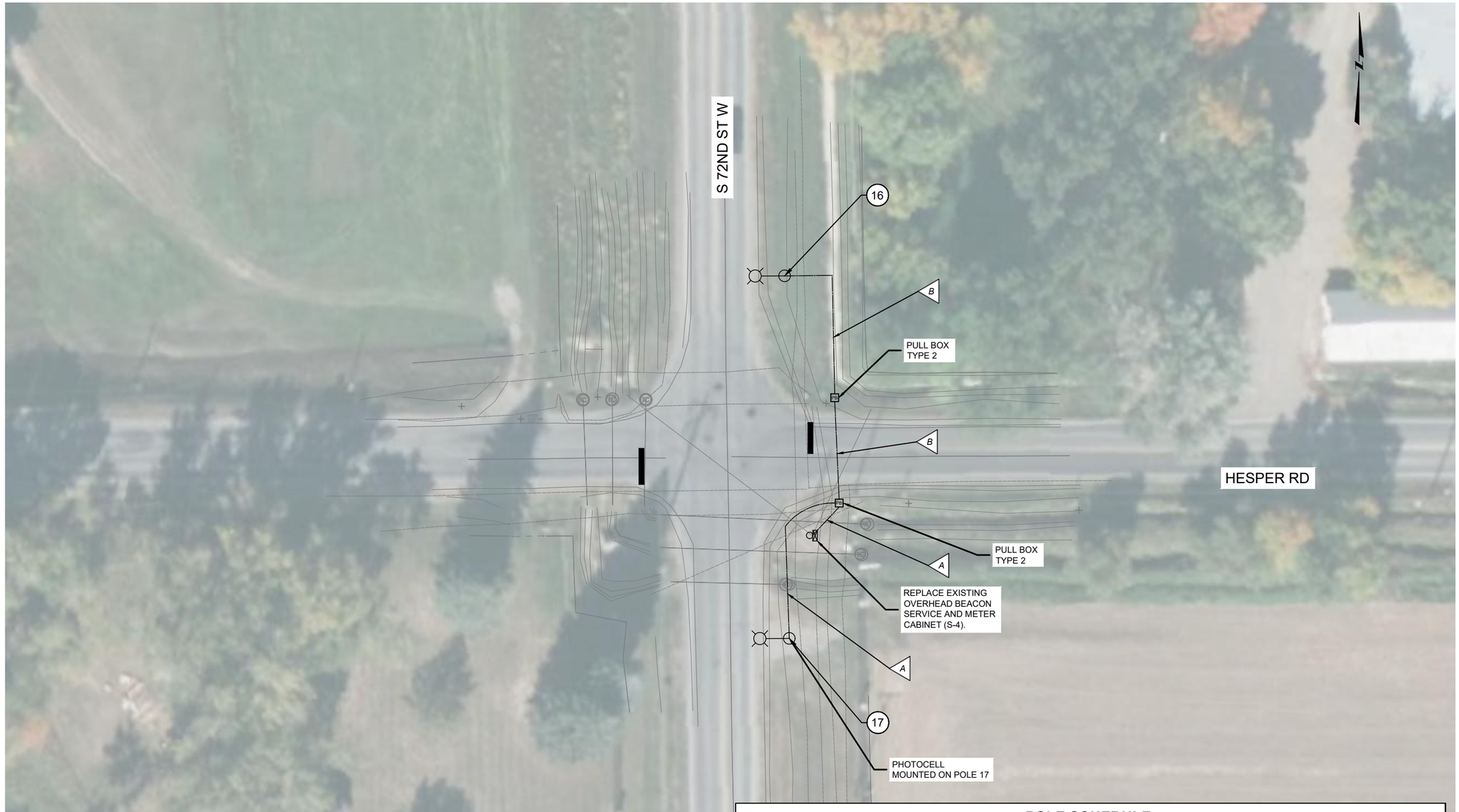

CONDUIT & WIRING SCHEDULE

A	1 OF 2 IN PLASTIC CONDUIT 2 OF AWG NO. 8 CONDUCTOR 1 OF 3 AWG NO. 12 CABLE 1 OF AWG NO. 10 CONDUCTOR	 (LIGHTING) (PHOTOCELL) (GROUND)
B	1 OF 2 IN PLASTIC CONDUIT 2 OF AWG NO. 8 CONDUCTOR 1 OF AWG NO. 10 CONDUCTOR	 (LIGHTING) (GROUND)

POLE SCHEDULE

POLE NO.	POLE TYPE	NORTHING	EASTING	ATTACHMENTS	LUMINAIRE MOUNTING HEIGHT X MAST ARM LENGTH	FOUNDATION DIA. X DEPTH	TYPE POLE BASE
16	10-A-500-6	544618.2634'	2172823.6390'	6	40' X 15'	2' X 5'	BREAKAWAY
17	10-A-500-6	544478.2717'	2172825.4348'	6	40' X 15'	2' X 5'	BREAKAWAY

NOTES:
1. 12" RED FLASHING BEACON
2. AC FLASHING BEACON CONTROLLLER
3. RADAR VEHICLE DETECTION
4. 12" AMBER FLASHING BEACON
5. SOLAR FLASHING BEACON CONTROLLER
6. 17,600 LUMEN TYPE 3 LUMINAIRE

SHEET NO.
E13

SITE 11

PROJECT NAME
SF 189 SOUTH D5 SAFETY IMPRV
COUNTY
CARBON, STILLWATER, & YELLOWSTONE
PROJECT ID
HSIP STWD(817)
UPN
9912000

CHECKED BY	RCL	03/04/2024
REVIEWED BY	JAD	03/01/2024
DESIGNED BY	TJH	02/29/2024

9912000ELPLNZ02.DWG

MONTANA
Department of Transportation

ELECTRICAL PLANS

3/4/2024 5:13 PM

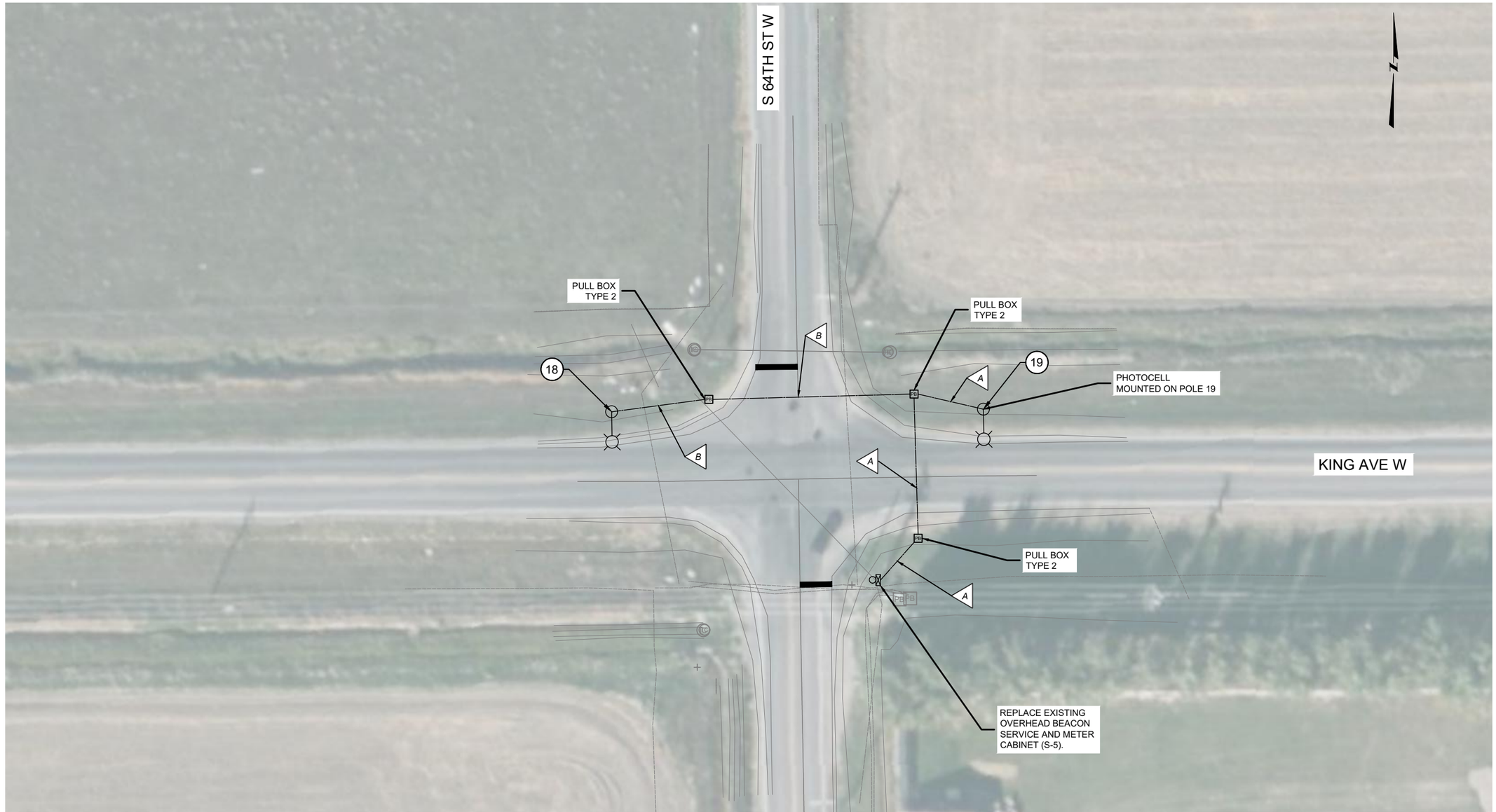

CONDUIT & WIRING SCHEDULE

A	1 OF 2 IN PLASTIC CONDUIT 2 OF AWG NO. 8 CONDUCTOR 1 OF 3 AWG NO. 12 CABLE 1 OF AWG NO. 10 CONDUCTOR	 (LIGHTING) (PHOTOCELL) (GROUND)
B	1 OF 2 IN PLASTIC CONDUIT 2 OF AWG NO. 8 CONDUCTOR 1 OF AWG NO. 10 CONDUCTOR	 (LIGHTING) (GROUND)

POLE SCHEDULE

POLE NO.	POLE TYPE	NORTHING	EASTING	ATTACHMENTS	LUMINAIRE MOUNTING HEIGHT X MAST ARM LENGTH	FOUNDATION DIA. X DEPTH	TYPE POLE BASE
18	10-A-500-6	549913.6056'	2177798.4988'	6	40' X 15'	2' X 5'	BREAKAWAY
19	10-A-500-6	549914.5979'	2177938.4988'	6	40' X 15'	2' X 5'	BREAKAWAY

NOTES:
1. 12" RED FLASHING BEACON
2. AC FLASHING BEACON CONTROLLLER
3. RADAR VEHICLE DETECTION
4. 12" AMBER FLASHING BEACON
5. SOLAR FLASHING BEACON CONTROLLER
6. 17,600 LUMEN TYPE 3 LUMINAIRE

SHEET NO.
E14

SITE 16

PROJECT NAME
SF 189 SOUTH D5 SAFETY IMPRV

COUNTY
CARBON, STILLWATER, & YELLOWSTONE

PROJECT ID
HSIP STWD(817)

UPN
9912000

CHECKED BY	RCL
REVIEWED BY	JAD
DESIGNED BY	TJH

03/04/2024
03/01/2024
02/29/2024

9912000ELPLNZ02.DWG

MONTANA
Department of Transportation

ELECTRICAL PLANS

3/4/2024 5:13 PM

ADVERTISED COPY

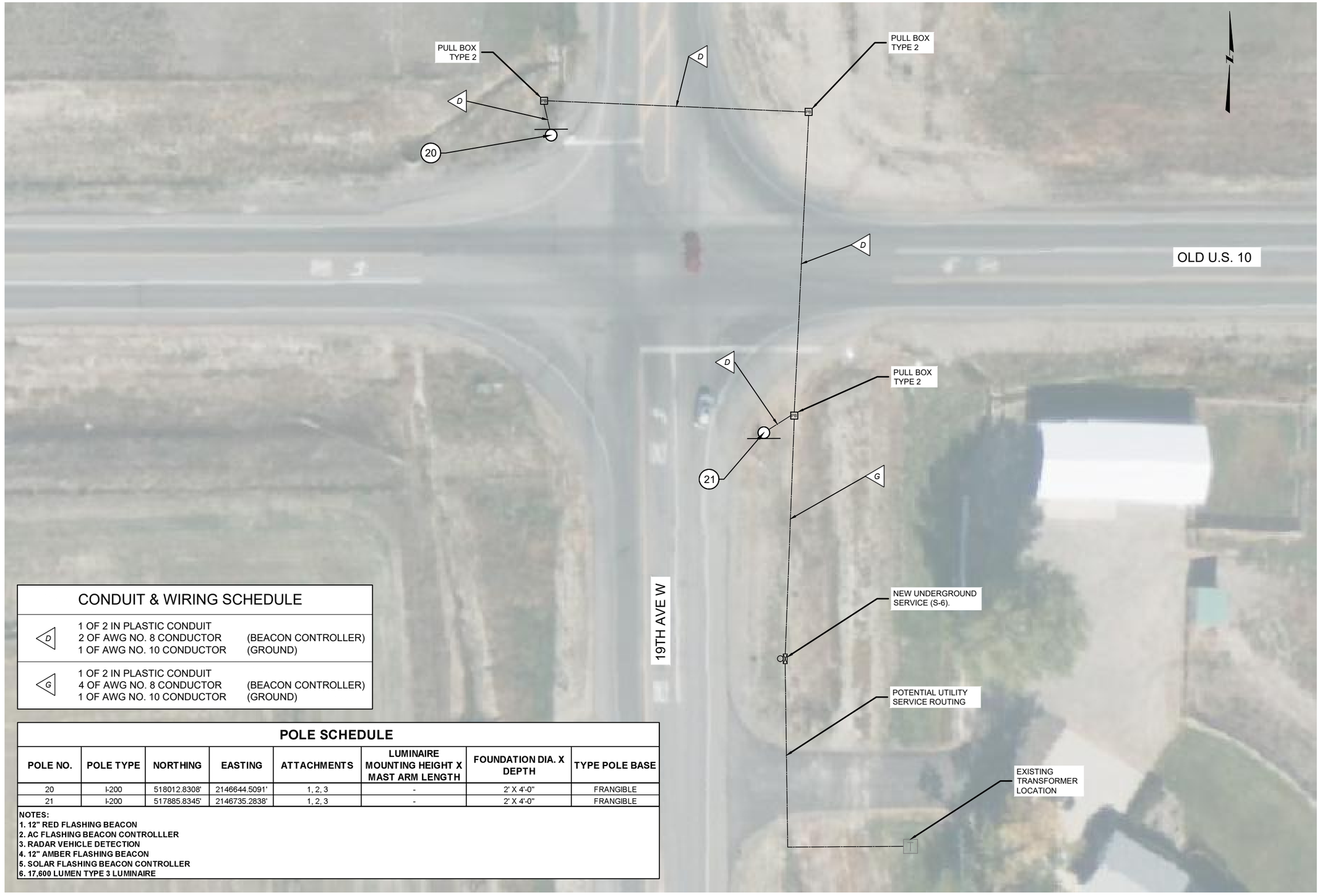

CONDUIT & WIRING SCHEDULE

D	1 OF 2 IN PLASTIC CONDUIT 2 OF AWG NO. 8 CONDUCTOR 1 OF AWG NO. 10 CONDUCTOR	(BEACON CONTROLLER) (GROUND)
G	1 OF 2 IN PLASTIC CONDUIT 4 OF AWG NO. 8 CONDUCTOR 1 OF AWG NO. 10 CONDUCTOR	(BEACON CONTROLLER) (GROUND)

POLE SCHEDULE

POLE NO.	POLE TYPE	NORTHING	EASTING	ATTACHMENTS	LUMINAIRE MOUNTING HEIGHT X MAST ARM LENGTH	FOUNDATION DIA. X DEPTH	TYPE POLE BASE
20	I-200	518012.8308'	2146644.5091'	1, 2, 3	-	2' X 4'-0"	FRANGIBLE
21	I-200	517885.8345'	2146735.2838'	1, 2, 3	-	2' X 4'-0"	FRANGIBLE

NOTES:
1. 12" RED FLASHING BEACON
2. AC FLASHING BEACON CONTROLLLER
3. RADAR VEHICLE DETECTION
4. 12" AMBER FLASHING BEACON
5. SOLAR FLASHING BEACON CONTROLLER
6. 17,600 LUMEN TYPE 3 LUMINAIRE

SHEET NO.
E15

SITE 18

PROJECT NAME
SF 189 SOUTH D5 SAFETY IMPRV
COUNTY
CARBON, STILLWATER, & YELLOWSTONE
PROJECT ID
HSIP STWD(817)
UPN
9912000

CHECKED BY	RCL	03/04/2024
REVIEWED BY	JAD	03/01/2024
DESIGNED BY	TJH	02/29/2024

9912000ELPLNZ02.DWG

MONTANA
Department of Transportation

ELECTRICAL PLANS

3/4/2024 5:13 PM