CURRENT DATE OF REVISION
MT 100 SECTION
CONCRETE

Test Method No.	Title	Pages	Date of Publication or Revision
MT 100	Contractor Submitted Concrete Mix Design	pp 1-3	Jun 2016
MT 101	Making and Curing Compressive and Flexural Strength Test Specimens in the Field	pp 1	Dec 2015
MT 102	Eliminated (Use AASHTO T 152)		
MT 103	Measuring the Thickness of In-Place Concrete by Use of Concrete Thickness Gauge	pp 1-3	Mar 2007
MT 104	Eliminated (Use AASHTO T 119)		
MT 105	Eliminated (Use AASHTO R 60)		
MT 106	Eliminated (Use AASHTO T 148)		
MT 107	Eliminated (Use AASHTO T 196)		
MT 108	Sampling and Certification of Portland Cement	pp 1-2	Jun 2004
MT 109	Method for Sampling Water	pp 1	Jun 2004
MT 110	Reinforced Concrete Pipe and Other Precast Items	pp 1-4	Jan 2012
MT 111	Sampling, Inspection and Reporting on Prestressed Structural Members	pp 1-3	Jan 2012
MT 112	Eliminated (Use AASHTO T 24)		
MT 113	Eliminated (Use ASTM E965)		
MT 114	Sampling for Chloride Content of Bridge Deck Concrete	pp 1-3	Feb 2010
MT 115	Eliminated (Use AASHTO T 121)		
MT 116	Eliminated (Use AASHTO T 347)		
MT 117	Making and Curing Concrete Compressive and Flexural Strength Specimens in the Field for Self-Consolidating Concrete (SCC)	pp 1	Dec 2015
MT 118	Method of Determining Air Content of Freshly Mixed Self-Consolidating Concrete by the Pressure Method	pp 1	Dec 2015
MT 119	Moisture Correction for Concrete Mix Designs (formerly MT 506)	pp 1	Jun 2004
MT 120	Vacant		
MT 121	Effect of Organic Impurities in Fine Aggregate on Strength of Mortar	pp 1	Jun 2016
MT 122	Optimized Aggregate Gradation for Hydraulic Cement Concrete Mix Designs (formerly MT 215)	pp 1-6	Jun 2013

METHODS OF SAMPLING AND TESTING
MT 100-16
CONTRACTOR SUBMITTED CONCRETE MIX DESIGN

1 Scope

1.1 This document describes required mix design procedures for independent concrete mix designs and establishes the information required for a mix design submittal.

1.2 This procedure applies to the Montana Department of Transportation (MDT) projects requiring an approved concrete mix design. It is to be used for preparation of a mix design by the contractor for submission to MDT's Materials Bureau for final approval.

1.3 It is the responsibility of the contractor to provide mix designs meeting the required specifications of Section 551, plans, supplemental requirements, and any special provisions included in the contract. The testing of the contractor's proposed mix design must be performed by a certified laboratory or performed by a certified technician with a Professional Engineer as the signature of record. A certified laboratory is any laboratory meeting the requirements of ASTM C1077. A certified technician will have current ACI Field, Laboratory and Strength Testing certifications or corresponding current WAQTC certifications. Perform concrete mix designs in conformance with Montana, AASHTO, ACI and ASTM procedures. Mix Designs submitted by Certified Precast or Prestressed concrete plants are exempt from this subsection. A Certified plant is any concrete plant listed on the MDT's Qualified Products List (QPL).

2 Referenced Documents

ASTM

C1077 Standard Practice for Agencies Testing Concrete and Concrete Aggregates for Use in Construction and Criteria for Testing Agency Evaluation

MT Materials Manual

MT 601 Materials Sampling, Testing, and Acceptance Guide Index

3 Procedure

3.1 A mix design must be submitted for each class of concrete to be used on an MDT project to the Project Manager. Mix designs, including all required information, must be submitted 15 working days prior to concrete placement. Mix designs are to be submitted as either a new mix design or a mix design transfer.

3.2 *Materials:* All materials proposed are subject to approval. Refer to MT 601 for sampling and testing requirements.

3.3 *New Mix Design (Trial Batches):* When submitting a new mix design, trial batches must be performed. Batches must be based on the same materials and proportions proposed for the project. Trial batches must be completed 15 working days before concrete placement. The Materials Bureau will review all documentation and accept or reject the mix design.

Create at least one trial batch for each concrete mix design. Simulate haul time and mixing conditions to ensure proper workability at the jobsite. It is also recommended that a larger, more representative trial batch be made in the same manner as intended for project placement. For each trial batch, test in accordance with Annex A.1. All mix designs must include aggregate properties testing information for each aggregate size in accordance with Annex A.2. For alternative mix designs, per contract specifications, test in accordance with Annex A.3. Include data sheets for cementitious materials and admixtures with the design submittal. The trial batch will be subject to rejection if any test results fail to meet specified ranges and a new trial batch will

be requested. For each trial batch, cast a minimum of three sets of three test cylinders in 4” x 8” molds. Test and average one set at 3 days, one set at 7 days, and one set at 28 days. If earlier strength information is needed for de-tensioning prestressed applications, post tensioning, form removal, etc., submit strength data for the anticipated work. The average of the cylinders at 28 days must meet the minimum strength requirements of the contract. When permeability testing is required, perform testing of three cylinders cast from the trial batch in accordance with either AASHTO T 277 or AASHTO T 358. Cylinders used for AASTHO T 358 testing may be subsequently used for compressive strength determination. Based on the anticipated application of the mix design, cast and test as many specimens as needed to supply sufficient information.

3.4 *Mix Design Transfer:* Concrete mix designs used on MDT projects are valid for three years, provided they are transferred within 12 months of their previous use. Any request for transfer after three years will require new trial batches and resubmittal of the mix design. The contractor may request, in writing, the transfer of a concrete mix design to another project. There will be no substitutions of any materials or changes in mix proportions under this method. The Department may deny the transfer for any reason including, but not limited to, past performance, failing materials test results, raw material property changes, etc.

4 Acceptance

4.1 *Approval:* A representative of the MDT’s Materials Bureau will verify and sign off approval of the new or transferred concrete mix design provided required information, test results, and proper forms are submitted, and all required MDT specifications are met. When a signed copy of approval is issued to the contractor, concrete placement may begin. Any time before or after approval of the design, the Material’s Bureau may request additional materials for testing. Throughout the project, MDT may request additional tests be performed by the contractor to ensure proper placement and satisfactory test results.

4.2 *Rejection:* If a mix design produces failing results, a new mix design must be submitted for approval. The Materials Bureau may reject any design on the basis of any one failing test result.

4.3 In no case will the approval of a concrete mix design relieve the contractor of producing material meeting the contract requirements. Any changes or modifications to a mix design needed in the field must be approved by the Project Manager. A halt in production may be required for additional testing. Review and approval of the concrete mix design by a representative of the MDT’s Materials Bureau does not constitute acceptance of the concrete. Acceptance of concrete will be based solely on the test results of concrete placed on the project.

ANNEX

A.1 The following tests are required for all concrete mix design submittals:

- AASHTO R 39 Making and Curing Concrete Test Specimens in the Laboratory
- AASHTO R 60 Sampling Fresh Concrete
- AASHTO T 22 Compressive Strength of Cylindrical Concrete Specimens
- AASHTO T 119 Slump of Hydraulic Cement Concrete
- AASHTO T 121 Density (Unit Weight), Yield, and Air Content (Gravimetric) of Concrete
- AASHTO T 152 Air Content of Freshly Mixed Concrete by the Pressure Method
- AASHTO T 347 Slump Flow of Self-Consolidating Concrete (if applicable)
- AASHTO T 345 Passing Ability of Self-Consolidating Concrete by J-Ring (if applicable)
- AASHTO T 351 Visual Stability Index of Self-Consolidating Concrete (if applicable)
- ASTM C1064 Temperature of Freshly Mixed Hydraulic Cement Concrete
- MT 101 Making and Curing Concrete Test Specimens in the Field

A.2 The following tests are required for aggregates for all concrete mix design submittals:

- AASHTO T 2 Sampling of Aggregates
- AASHTO T 11 Materials Finer Than 75-µm (No. 200) Sieve in Mineral Aggregates by Washing
- AASHTO T 21 Organic Impurities in Fine Aggregates for Concrete
- AASHTO T 27 Sieve Analysis of Fine and Coarse Aggregates (Including Fineness Modulus)
- AASHTO T 84 Specific Gravity and Absorption of Fine Aggregate
- AASHTO T 85 Specific Gravity and Absorption of Coarse Aggregate
- AASHTO T 96 Resistance to Degradation of Small-Size Coarse Aggregate by Abrasion and Impact in the Los Angeles Machine
- AASHTO T 104 Soundness of Aggregate by Use of Sodium Sulfate or Magnesium Sulfate
- AASHTO T 112 Clay Lumps and Friable Particles in Aggregate
- MT 121 Effect Of Organic Impurities In Fine Aggregate On Strength Of Mortar

A.3 The following tests are required for alternative mix designs for specific classes of concrete:

- AASHTO T 277 Electrical Indication of Concrete's Ability to Resist Chloride Ion Penetration
- ASHTO T 358 Surface Resistivity Indication of Concrete's Ability to Resist Chloride Ion Penetration
- ASTM C157 Standard Test Method for Length Change of Hardened Hydraulic-Cement Mortar and Concrete
- ASTM C512 Standard Test Method for Creep of Concrete in Compression
- ASTM C469 Standard Test Method for Static Modulus of Elasticity and Poisson's Ratio of Concrete in Compression
- ASTM C457 Standard Test Method for Microscopical Determination of Parameters of the Air-Void System in Hardened Concrete

METHODS OF SAMPLING AND TESTING
MT 101-15
MAKING AND CURING CONCRETE COMPRESSIVE AND FLEXURAL STRENGTH TEST SPECIMENS IN THE FIELD
(*Modified AASHTO T 23*)

MT 101 is identical to AASHTO T 23 except for the following stipulations:

1. Include the following Montana Materials Manual references.

   MT Materials Manual
   MT 609 Field Numbering Concrete Cylinders

2. Replace the 1st sentence in Section 10.1.3.1 with the following:

   Cylinders – Upon receipt in the Materials Bureau, store specimens in a moist condition with free water maintained on their surfaces at all times at a temperature of 73 ± 3ºF (23 ± 2ºC) using water storage tanks or moist rooms complying with the requirements of AASHTO M 201, except when capping with sulfur mortar compound and immediately before testing.

3. Replace Section 11.1 with the following:

   Prior to transporting, cure and protect specimens as required in Section 10. Specimens shall not be transported until at least 8 h after final set (See Note 7). For transporting, efforts shall be made to protect the specimens from jarring, extreme changes in temperature, freezing, and moisture loss. Before transporting specimens from the field to the laboratory for testing, place specimens in sturdy boxes surrounded by a suitable cushioning material to prevent damage from jarring. During cold weather, protect the specimens from freezing with suitable insulation material. Prevent moisture loss during transportation by wrapping the specimens in plastic or wet burlap and by surrounding them with wet sand or sawdust or using tight-fitting plastic caps for plastic molds.

METHODS OF SAMPLING AND TESTING
MT 103-07
METHOD FOR MEASURING THE THICKNESS OF IN-PLACE CONCRETE BY USE OF CONCRETE THICKNESS GAUGE
(Montana Method)

1 Scope

1.1 This method covers the procedure for measuring the thickness of concrete pavements. Thickness is determined by using a concrete thickness gauge to measure the time required for an echo to bounce off the backside of the concrete member being tested. The thickness is a product of the velocity of sound in the material and one half the transit time (round trip) through the material.

2 Referenced Documents

AASHTO
T 148 Measuring Length of Drilled Concrete Cores

MT Materials Manual
MT 606 Selecting Sampling Locations by Random Sampling Technique

3 Apparatus

3.1 *Standard Surveying Equipment* – EDM, mirrors, level, rod, etc.

3.2 *Concrete Thickness Gauge*

3.3 *Core Drill* – for obtaining cylindrical core specimens

3.4 *Measuring Tape*

4 Vertical Control

4.1 When possible, it is recommended that at least one vertical control point be established for each day's placement of concrete, using survey methods prior to placement. After the concrete has hardened sufficiently, remeasure the same control point to determine the depth of the finished concrete. Use this point as a calibration point for the concrete thickness gauge. (Pre-established reference points and grade control points may also be used to determine concrete thickness).

5 Gauge Calibration Methods

5.1 <u>Gauge Calibration</u>

Place the concrete thickness gauge on the concrete, at the pre-established vertical control point, and calibrate according to the manufacturers instructions. The gauge will now establish the velocity for the particular concrete being tested.

5.2 <u>Direct Input Method</u>

Following the manufacturer's instructions, a direct input method may be used to calibrate the concrete thickness gauge. For the purpose of this method, a core will be taken to determine the actual thickness of the placed concrete. The concrete thickness gauge will then be calibrated using the core thickness.

6 Procedure

6.1 Calibrate the gauge according to one of the procedures described above. **The gauge must be calibrated on the concrete to be tested or the correct velocity entered into the gauge.** The calibration should be done on a smooth, clean surface to obtain the best data possible. (See Note 1) This data will be used for all subsequent tests and all tests must be completed on the same day as the gauge calibration.

6.2 Randomly select test locations (see Note 1) according to MT 606 Random Sampling Technique or as directed by the Engineering Project manager.

6.3 At the test location, take four measurements by rotating the gauge around a center point, collecting readings every 90 degrees. Average the results.

Note 1 – Make certain that the test head of the concrete thickness gauge is in good contact with the concrete surface. Testing should be done on a smooth clean surface to obtain the best data possible.

7 Calculation

7.1 Record gauge readings to the hundredth of a foot or (mm) on lab form

7.2 Record the average of the four (4) readings from each test location to a hundredth of a foot or (mm).

7.3 Determine and record the concrete thickness variation by subtracting the average of the four readings from the design thickness and record to the nearest hundredth of a foot (mm).

8 Report

8.1 Project Number
Project Name
Name of Tester
Title
Address
Date Measurements made
Test Location/Station
Test results

MT 103-07BLS

Montana Department of Transportation
Materials Division

REPORT ON DEPTH OF PCCP CONCRETE

Lab No. _____ Project No. _____

Project Name _____ Gauge No. _____

Tested by _____ Title _____ District _____

Submitted By _____ Date Tested _____

Sta. of section _____ Date Placed _____

Sta. Cal or Tested	**Depth measurement at four points**				**Average Depth**

Remarks:

Design thickness of PCCP _____ (in / mm)

Avg. variation from design _____ (in / mm)

Distr.
1-Materials Bureau
1-Constr Bureau
1-Pavement Analysis Sec.
1-EPM
1-Dist/Area Lab

METHODS OF SAMPLING AND TESTING
MT 108-04
SAMPLING AND CERTIFICATION OF PORTLAND CEMENT

1 Scope

1.1 This method covers the requirements for sampling and certification of Portland cement.

2 General

2.1 Cement samples shall weigh a minimum of 6.8 Kg (15 pounds). Such samples shall be placed in air-tight plastic bags which shall in turn be placed in canvas bags to protect against breakage during shipment. The bin or silo number and the grind number shall be shown on the Lab. Form No. 55 to accompany the sample.

3 Procedure

3.1 A sample of cement shall be submitted to the Materials Bureau, prior to construction, for all projects which involve bridge construction or projects which involve 114.3 cubic meters (125 cubic yards) of concrete. The sample may be taken from existing stock at the ready mix plant. On many projects this will be the only sample required unless the provisions of Section 4 make additional sampling necessary.

4 Sampling Frequency

4.1 *Project Sampling*

4.1.1 *Bridge Projects*

4.1.1.1 Minimum of one sample taken prior to the start of concrete production.

4.1.1.2 One sample for each additional 458.6 cubic meters (600 cubic yards) of concrete used.

4.1.1.3 This procedure shall be used regardless of the number of structures involved in the project.

4.1.2 *Paving Projects*

4.1.2.1 One sample taken prior to the start of concrete production.

4.1.2.2 Additional samples taken for each 4572.0 cubic meters (5,000 cubic yards) of concrete produced.

4.1.3 *Cement Treated Base Projects*

4.1.3.1 One sample taken at the start of the project.

4.1.4 *Miscellaneous Projects (cattle guards, sign bases, etc.)*

4.1.4.1 One sample taken prior to the start of concrete production on jobs involving 114.3 cubic meters (125 cubic yards) of concrete or more.

4.1.4.2 Samples need not be submitted for projects involving less than 114.3 cubic meters (125 cubic yards) of concrete.

4.2 *Random Sampling*

4.2.1 Each district shall, in addition to samples taken in accordance with Section 4.1 above, submit a random sample of each brand of cement used in that district during the year. These samples may be taken at any time during the year.

5 Cement Certification

5.1 The cement plants shall furnish the Materials Bureau with certified test results for each new grind or bin of cement produced for use within the state.

5.2 Each shipment of cement from the manufacturing plant to a highway project shall be accompanied by a certificate of compliance. This certificate shall state that the cement complies with all the requirements of AASHTO M 85 or ASTM C150, low alkali cement, and shall be signed by a responsible representative of the cement plant. Two copies of this certification shall accompany the shipment, one for the consignee and one for the Engineering Project Manager.

METHODS OF SAMPLING AND TESTING
MT 109-04
METHOD OF SAMPLING WATER

1 Scope

1.1 This method covers the sampling of water for determination of its suitability for use in concrete, for determination of corrosivity, and for chemical testing for potability. It does not include sampling for biological testing.

2 Referenced Documents

MT Materials Manual
MT 601 Materials Sampling, Testing, and Acceptance Guide Index

3 Application

3.1 This method is applicable to sampling industrial and domestic water supplies from sources such as wells, rivers, streams, lakes, ponds, reservoirs, pipelines and conduits for chemical or physical tests.

4 Point of Sampling

4.1 Where the water in a stream is mixed so as to approach uniformity, a sample taken at any point in the cross section is satisfactory.

4.2 For bodies of water such as ponds or reservoirs, avoid surface and/or bottom sampling and attempt to obtain an integrated sample containing water from all points in a vertical section. Depending upon the nature of the source being sampled, it may be desirable to sample at several points and to combine the samples to obtain a representative sample of the source.

4.3 In sampling from pipelines, conduits, pump discharge, etc., make certain that all conduits have been flushed. In the case of water wells, initial pumping for well cleaning purposes shall have been completed so the sample represents the sustained output of the source.

5 Frequency of Sampling

5.1 A sample of the water proposed for use shall be submitted in accordance with the frequency specified in MT 601.

6 Volume of Sample and Type of Container

6.1 Furnish a one liter (quart) sample in a clean glass or plastic bottle or jar with a screw cap lid with liner. Fill almost to the top, but allow a small space to allow for possible expansion due to temperature change.

7 Labeling

7.1 Label with identifying source data and state the purpose for which the sample is taken.

METHODS OF SAMPLING AND TESTING
MT 110-12
METHOD OF ACCEPTANCE FOR
REINFORCED CONCRETE PIPE AND OTHER PRECAST ITEMS
(*Montana Test Method)*

1 Scope

1.1 This procedure defines inspection responsibilities and verification processes applicable to all suppliers of pre-cast concrete pipe and associated items.

2 Referenced Documents

AASHTO

M 55 Steel, Welded Wire Reinforcement, Plain, for Concrete
M 85 Portland Cement
M 170 Reinforced Concrete Culvert, Storm Drain, and Sewer Pipe
M 206 Reinforced Arch Concrete Culvert, Storm Drain, and Sewer Pipe
M 207 Reinforced Elliptical Concrete Culvert, Storm Drain, and Sewer Pipe
M 259 Precast Reinforced Concrete Box Sections for Culvert, Storm Drains, and Sewers
T 24 Obtaining and Testing Drilled Cores and Sawed Beams of Concrete
T 119 Slump of Hydraulic Cement Concrete
T 152 Air Content of Freshly Mixed Concrete by the Pressure Method
T 347 Slump Flow of Self-Consolidating Concrete

ASTM

C361 Standard Specification for Reinforced Concrete Low-Head Pressure Pipe

MT Materials Manual

MT 101 Making and Curing Compressive and Flexural Strength Test Specimens in the Field
MT 108 Sampling and Certification of Portland Cement
MT 117 Making and Curing Concrete Compressive and Flexural Strength Specimens in the Field for Self-Consolidating Concrete (SCC)
MT 118 Method of Determining Air Content of Freshly Mixed Self Consolidating Concrete by the Pressure Method

MDT Construction Bureau

Manual for Culvert and Pipe Installation and Inspection

3 Definitions

ACPA – American Concrete Pipe Association
NPCA – National Precast Concrete Association

4 Inspection Process for ACPA and NPCA Certified Plants

4.1 Each participating manufacturer must maintain sufficient procedures and documentation to assure that their products are manufactured and tested in accordance with the guidelines of ACPA and/or NPCA certification programs. An MDT Inspector will conduct a thorough inspection of each Certified Plant to verify compliance with these requirements. Plants meeting these requirements will be listed on the Qualified Products List.

4.1.1 Yearly

Inspection Checklist

- Verify ACPA and/or NPCA certification.
- Verify that certified manufacturing plants have a Quality Control Manual, applicable AASHTO, ASTM standards, organizational chart, and personnel training and qualification records.
- Verify that production and testing equipment has been properly calibrated according to the calibration requirements as stated in the Quality Control manual.
- Verify mix designs are approved.
- Verify that the manufacturers detailed design information meets MDT requirements.
- Verify that documents are maintained for all suppliers of materials for the months the plant is producing.
    - Admixture Certifications
    - Gasket and Joint Sealant Material Certifications and Test Reports
        - Verify 12” to 33” have been sampled/tested at 1/300 frequency
        - Verify 36” and larger have been sampled/tested at 1/100 frequency
- Verify that test reports are maintained per ACPA and/or NCPA testing frequencies for the following:
    - Absorption Test Results
    - Three Edge Bearing Test
- Conduct Monthly or Frequency Based Inspection outlined in Sec. 4.2
- Sample concrete cylinders and reinforcing steel for Department testing.
- Verify that any deficiencies recorded from the previous inspection have been addressed.

4.2 Monthly or Frequency Based

Approximately once a month, unless another frequency is defined, inspect the fabricating plant’s certification reports, test results, and other records from the previous inspection date to present. Ensure that the plant is ‘Buy America’ compliant for all steel products. Witness concrete cylinder testing is being performed correctly on certified equipment and meets MDT requirements.

Inspection Checklist

- Verify that any deficiencies recorded from the previous inspection have been addressed.
- Verify the following documentation has been maintained:
    - Buy America Certification
    - Cement Mill Reports
    - Sieve Analysis of Fine and Coarse Aggregates (once every 3 months)
    - Fly Ash Certifications
    - Other Cementitious Material Certifications and Test Reports
    - Cylinder Break Strength Results and Frequencies
- Verify fabricated cages and reinforcement conforms to MDT specifications.
- Verify a dimensional test report on one pipe size to ensure that they match the dimensions shown on the detailed drawings or AASHTO Standard Specifications.

- Observe or perform the following concrete tests:
  - Slump
  - Air Content
  - Temperature of the mix
  - Making of cylinders
  - Cylinder compression testing
  - Slump Flow (when applicable)
  - J Ring (when applicable)
  - Three Edge Bearing Test including Destructive Testing outlined in Section 4.3 (once every 3 months)

4.3 Observe destructive testing in the form of crushing precast pipe and other precast items in conjunction with the three edge bearing tests. Inspector will randomly select precast pipe sample to be tested. Verify the size, amount, and origin of the reinforcing steel. Coring and random inspections will be performed on Concrete Box culverts and miscellaneous precast items such as cutoff walls, cattle guard bases, FETS, and sound walls as directed by MDT.

5 Inspection Process for Non-Certified Plants

5.1 Inspect non-certified plants to confirm the products meet MDT specifications. Sample components i.e. concrete, reinforcing steel and other items. Check fabrication drawings and inspect the final product for quality. The plant's quality control program must be sufficient that MDT can confirm quality of materials and processes used. MDT level of inspection will vary according to Department needs.

- Verify personnel training and qualification records.
- Verify production and testing equipment has been properly calibrated.
- Verify mix designs are approved.
- Verify that the manufacturers detailed design information meets MDT requirements.
- Verify fabricated cages and reinforcement conforms to MDT specifications.
- Verify a dimensional test report on product to ensure that they match the dimensions shown on the detailed drawings or AASHTO Standard Specifications.
- Verify rate and frequency of testing is adequate and Quality Control records are maintained.
- Verify the following documentation has been maintained and required samples have been acquired:
  - Buy America Certifications and reinforcing steel samples
  - Cement Mill Reports
  - Aggregate samples for Sieve Analysis of Fine and Coarse Aggregates
  - Fly Ash Certifications
  - Other Cementitious Material Certifications and Test Reports
  - Cylinder Break Strength Results and Frequencies
  - Admixture Certifications
  - Gasket and Joint Sealant Material Certifications and Test Reports
- Observe or perform the following concrete tests:
  - Slump
  - Air Content
  - Temperature of the mix
  - Making of cylinders
  - Cylinder compression testing
  - Slump Flow (when applicable)
  - J Ring (when applicable)
  - Concrete Absorption
  - Three Edge Bearing Test or verification of test results

- Verify concrete cylinders are made and tested periodically to represent the concrete placed in all items.
- Concrete items other than concrete pipe will be entered on Form 19A. These items, together with pipe too large to test, are represented by cylinder tests as outlined above.

6 Mark of Inspection

6.1 Products manufactured at a certified plant will not carry the mark of inspection. Non-certified manufacturers of concrete pipe and other concrete items must notify MDT when producing products for a project so that inspection arrangements can be made. All concrete products produced by a non-certified plant must carry a mark of inspection. (see Figure 1). This will be stamped on each section of product, by the inspector, where it will be clearly visible. The circle M indicates the product was inspected. Final acceptance will be made in the field.

6.2 If a product is to be rejected in the field, place an X next to the product identification stamp. This mark indicates that the product is rejected for all MDT projects. If the product requires repairs, but is not necessarily rejected; mark areas requiring repair to clearly designate and track what needs correction prior to acceptance.

Figure 1
CIRCLE M STAMP

METHODS OF SAMPLING AND TESTING
MT 111-12
SAMPLING, INSPECTION AND REPORTING ON PRESTRESSED STRUCTURAL MEMBERS

1 Scope

1.1 This method is written to the individuals completing inspection and establishes a uniform procedure for the sampling, inspecting, and reporting of pre-stressed structural members.

1.2 Inspection Process Overview

1.2.1 Provide data to the field as it becomes available. Send original test results and reports to MDT Helena Materials Lab (to be placed in the job file), keep one copy in the Inspectors personal file, and send one copy to the Project Manager for the project file.

1.2.2 Send an inspection report with each beam to the project. Provide copies to the EPM, District Materials Lab, the Construction Bureau, and the Materials Bureau. This report must state that all of the materials used in the completed beams have been sampled, tested, and documented within reports that are in the possession of the Plant Inspector. Identify the beams by number and place in the report file as an indication that the beams are complete and acceptable subject to final field inspection.

1.2.3 The following links provide access to the Department's most current forms to be used during Prestress Inspection:

Strand Tensioning & Cylinder Breaks
Form 45 – Rebar or Strand Sample
Form 48 – Shipping & Final Approval
Form 48A – Final Plant Inspection
Ready Mix Pour Record
Fabrication Inspection Report
Miscellaneous Inspection Report

2 Referenced Documents

AASHTO Methods

T 24 Obtaining and Testing Drilled Cores and Sawed Beams of Concrete
T 119 Slump of Hydraulic Cement Concrete
T 152 Air Content of Freshly Mixed Concrete by the Pressure Method
T 347 Slump Flow of Self-Consolidating Concrete

MT Materials Manual

MT 101 Making and Curing Compressive and Flexural Strength Test Specimens
MT 108 Sampling and Certification of Portland Cement
MT 117 Making and Curing Concrete Compressive and Flexural Strength Specimens in the Field for Self Consolidating Concrete (SCC)
MT 118 Method of Determining Air Content of Freshly Mixed Self Consolidating Concrete by the Pressure Method
MT 201 Sampling Roadway Materials

3 Materials

3.1 Materials used in the manufacture of pre-stressed beams are covered individually to avoid any misunderstanding on the part of the Plant Inspectors.

3.2 Sample and test aggregates will be sampled and tested quarterly in accordance with MT 201. If new sources or deviations in material properties are apparent, resample aggregates as necessary for quality assurance.

3.3 Cementitious materials and admixtures are listed on the Department's Qualified Products. Verify that the mix design has been approved by the Helena Materials Bureau and appropriate material types and quantities are used.

3.4 Wire strand is tested in the Materials Bureau. Submit samples with a Form 45, a copy of the mill test results of the load elongation curve, and associated documentation to meet Buy America requirements. The pre-stress plant is responsible for notifying the Plant Inspector when shipments of strand are received at the pre-stress plant. Sample strand by obtaining two 5 foot (1.5 m) long sections from a reel in the shipment. Submit these samples together with reel numbers, heat numbers, and all available information such as size, strength, etc., to the Materials Bureau for testing. Strand or any other item or ingredient used in the manufacture of a structural member prior to test results being received by the Plant Inspector are at the plant's risk. Reject members constructed with strand that does not meet Department requirements.

3.5 Sample reinforcing steel as each new shipment arrives at the plant. The pre-stress plant is responsible for notifying the Plant Inspector when shipments of rebar are received at the pre-stress plant. Submit two 3 foot (1.0 m) long samples of each bar size to the Materials Bureau with a Form 45 and associated documentation required to meet Buy America requirements. Verify that all of the pertinent information is shown on the accompanying reports.

3.6 Witness the casting of cylinders representing release breaks by the pre-stress plant personnel. Witness or cast the cylinders for acceptance of twenty-eight day strength testing in accordance with MT 101. Ensure that a set of at least 3 cylinders are fabricated for each pour in addition to release cylinders of a sufficient number to perform the required tests prior to release of the strand per Specification Subsection 553.03.11 Transfer of Pre-stress (minimum of 3 cylinders).

4 Plant Inspection and Acceptance

4.1 Review all documentation to verify conformity with contract requirements. For typical documentation requirements, see Specification Subsections 553.02 and 553.03.

4.2 Verify that the bed layout measurements have been checked by plant personnel and are in agreement with the approved shop drawings.

4.3 Verify strand patterns are in agreement with the approved shop drawings prior to tensioning. Check strands for strength and elongation (temperature correction) as provided on the approved shop drawings. Document and notify pre-stress plant personnel of any materials used in the beam that have not been sampled and tested in accordance with Section 3.1.3.

4.4 Verify that the rebar cage layout has been checked by pre-stress plant personnel and is in accordance with contract requirements. Document and notify pre-stress plant personnel of any materials used in beam that have not been sampled and tested in accordance with Section 3.1.4.

4.5 Verify that a final pre-pour inspection occurs prior to forms being set. Obtain a copy of the plant's pre-pour inspection form which must include details on the placement of inserts, bulkheads, bearing plate locations, and all other applicable details.

4.6 Visually check forms for proper placement. Verify that remaining steel and lift hooks have been included in accordance with approved shop drawings prior to concrete placement.

4.7 Witness concrete tests and cylinder breaks to verify requirements of Section 3.1.5 and Specification Sections 553.03.10 and 553.03.11 are met. After forms are removed, visually inspect before allowing the strand release (cutting of strands). If repairs are necessary, do not allow strand release until repairs are completed and are cured for a minimum of 24 hours.

4.7.1 Record pour placement times and field verification information using the "Ready Mix Pour Record" when pre-stress items are constructed using ready mix concrete.

4.8 Perform Final Inspection to ensure the finished member meets plan dimensions. Document the Final Inspection on Form 48-A.

4.8.1 Mark each pre-stress member that conforms to specification requirements in all respects with a Circle M stamp (see Fig.1) before shipment from the plant. This identifying mark indicates that fabrication procedures, quality of materials and workmanship are satisfactory and the member is complete at the plant.

4.8.2 If deficiencies are identified, notify the Physical Testing Engineer, Bridge Bureau and Project Manager of the concerns and determine the corrective actions that are required. Do not mark these members with a Circle M stamp unless corrective actions have been completed and no additional concerns exist. Absence of a Circle M stamp indicates that the member is not complete or deficiencies have been observed by the Plant Inspector and additional corrective actions may be required. Note any deficiencies on the Pre-stress Beam - Final Plant Inspection Check List (Form 48-A). Noted deficiencies not corrected before shipment will be transmitted to the field with the Pre-stressed Beam Report Lab Form 48.

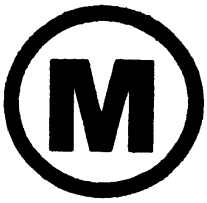

Figure 1
CIRCLE M STAMP

5 Field Inspection and Acceptance

5.1 When the product arrives at the job site, inspect members for shipping and handling damage or other defects. Notify the Project Manager of any damage or defects observed in the field.

5.2 Final acceptance of the member is made in the field in accordance with the contract. Ensure any deficiencies identified on the Pre-stressed Beam Report (Form 48) are addressed before final acceptance. Project Manager may reject any product that does not serve the necessary function or fails to meet contract requirements.

METHODS OF SAMPLING AND TESTING
MT 114-10
METHOD OF SAMPLING FOR CHLORIDE CONTENT OF BRIDGE DECK CONCRETE

1 Scope

1.1 This is a method of sampling bridge deck concrete for chloride content.

1.2 See MDT Safety Policies and Procedures Manual.

2 Apparatus

2.1 *Coring Machine*

2.2 *Pachometer* - A pachometer is available upon request from the Materials Bureau

2.3 *Gas powered (110-115 Volt A.C.) Generator* with transport cart for operating drill

2.4 *Rotary Impact Drill* of heavy duty construction

2.5 *Bit* - 3/4 inch (19mm) diameter carbide steel bit

2.6 *Vacuum cleaner*

2.7 *Pliable sampling spoon* - Copper or flexible spoon 3 inches (7.5mm) in length and less than 3/4 inch (19mm) in width

2.8 *Plastic bottles* - Approximately 2 inches (50mm) tall and 1 inch diameter with sealable caps

2.9 *Ruler* with 0.10" increments and millimeters

2.10 *Paper labels*

2.11 *Fast Setting Grout* - "Set 45", "Rockite" or other fast setting grout

2.11 *Personal Protective Equipment* - Plastic goggles, hearing protection, gloves

2.12 *Plastic bottle* containing one of the following: distilled water, deionized water, ethanol (denatured) or methanol (technical grade)

3 Sampling

3.1 Chloride samples shall be taken before coring and in an area as close as possible and with the same types of distress (i.e. delaminations or cracking) as that intended for coring.

3.2 When coring or sampling for chlorides extreme caution will be required due to traffic hazards and use of power equipment. For standard safety practices refer to the MDT Safety Policies and Procedures Manual.

4 Procedure

4.1 The Bridge Plans are used to find approximate rebar location, cover over rebar, and thickness of concrete.

4.2 The pachometer is used to locate top layer of reinforcing steel and its depth.

4.3 Drill a hole 1/4 inch (6mm) deep and discard this portion of the sample by using the Vacuum cleaner. (See Note 1)

4.4 Drill the hole to a depth corresponding to the top of the rebar (see Note 1 and 2) and use copper or plastic spoon to collect minimum 10 g sample in plastic bottle labeled "A".

4.5 Clean the hole out with the Vacuum cleaner.

4.6 Drill hole to a depth of one inch below the top layer of reinforcing steel. Secure minimum 10 g sample of pulverized concrete with copper or plastic spoon and place into plastic bottle labeled as "B". (See Note 1 and 2)

4.7 Clean holes and fill with high strength epoxy grout patching compound such as "Set 45" or "Rockite".

Note 1 - The sketch as shown below defines the drilling depth for sampling:

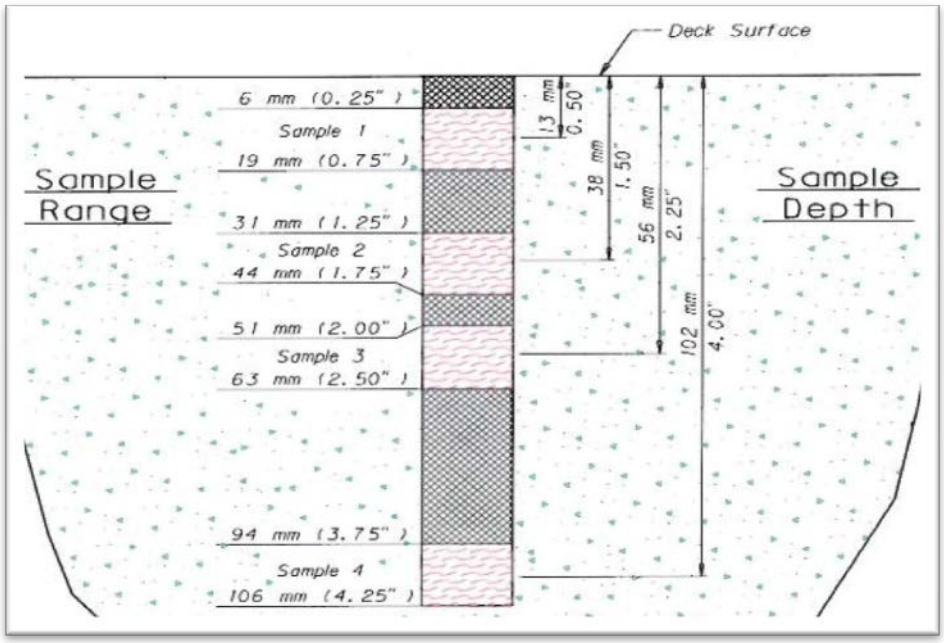

Cross Section Through Slab

Note 2 - During sample collection and pulverizing, personnel shall use caution to prevent contact of the sample with hands or other sources of body perspiration or contamination. Further, all sampling tools (drill bits, spoons, bottles, sieves, etc.) shall be washed with alcohol or distilled water and shall be dry prior to use on each separate sample. Alcohol is normally preferred for washing because of the rapid drying which naturally occurs.

5 Labeling

5.1 The following data will be written on each label and attached to each sample bottle:

- Project number and termini
- E.B. or W.B. lane
- Position in lane measured from curb
- Depth range of sample measured from top of deck and labeled as "A" or "B"; (See Note 1)
- Depth of reinforcing steel
- Core number cross reference
- Brief description of condition of area (i.e., delaminations, cracks).

6 Submittal

6.1 Cores with chloride samples will be submitted to the Materials Bureau.

METHODS OF SAMPLING AND TESTING
MT 117-15
MAKING AND CURING CONCRETE COMPRESSIVE AND FLEXURAL STRENGTH TEST SPECIMENS IN THE FIELD FOR SELF-CONSOLIDATING CONCRETE (SCC)
(*Modified AASHTO T23*)

MT 117 is identical to AASHTO T 23 except for the following stipulations:

1. Include the following Montana Materials Manual references.

   MT Materials Manual
   MT 118 Method of Determining Air Content of Freshly Mixed Self-Consolidating Concrete by the Pressure Method
   MT 609 Field Numbering Concrete Cylinders

2. In general, tamping via rodding or vibration is eliminated from the method for the testing of self-consolidating concrete. Specifically:

   A. Replace Section 1.1 with the following:

      "This method covers procedures for making and curing cylindrical and beam specimens from representative samples of fresh self-consolidating concrete (SCC) for a construction project."

   B. Eliminate Section 5.4

   C. Replace Section 5.8 with the following:

      "Slump Flow Apparatus--The apparatus for measurement of slump flow shall conform to the requirements of AASHTO T 347".

   D. Replace Section 8.2 with the following:

      "*Air Content* – Determine and record the air content in accordance with MT 118. The concrete used in performing the air content test shall not be used in fabricating test specimens."

   E. Replace Section 9.2 with the following:

      "Casting the Concrete – Place the concrete in the molds using a container large enough to fill each mold in one lift."

   F. Replace Section 9.2.1 with the following:

      "Number of Layers – Make specimens by filling the molds in one lift. Do not rod or vibrate."

   G. Eliminate Sections 9.2.2 and 9.3

3. Replace Section 11.1 with the following:

   Prior to transporting, cure and protect specimens as required in Section 10. Specimens shall not be transported until at least 8 h after final set (See Note 7). For transporting, efforts shall be made to protect the specimens from jarring, extreme changes in temperature, freezing, and moisture loss. Before transporting specimens from the field to the laboratory for testing, place specimens in sturdy boxes surrounded by a suitable cushioning material to prevent damage from jarring. During cold weather, protect the specimens from freezing with suitable insulation material. Prevent moisture loss during transportation by wrapping the specimens in plastic or wet burlap and by surrounding them with wet sand or sawdust or using tight-fitting plastic caps for plastic molds.

METHODS OF SAMPLING AND TESTING
MT 118-15
METHOD OF DETERMINING AIR CONTENT OF FRESHLY MIXED SELF-CONSOLIDATING CONCRETE BY THE PRESSURE METHOD
(*Modified AASHTO T 152*)

MT 118 is identical to AASHTO T 152 except for the following stipulations:

1. Replace Section 1.1 with the following:

   "This method covers determination of the air content of freshly mixed self-consolidating concrete from observation of the change in volume of concrete with a change in pressure."

2. In general, tamping via rodding or vibration is eliminated from the method for the testing of self-consolidating concrete. Specifically:

   A. Remove Sections 4.9 and 4.15

   B. Replace Section 9.1.1 with the following:

   "Dampen the interior of the measuring bowl and place it on a flat, level, firm surface. Place a representative sample of the concrete into the measuring bowl in one lift. Do not rod or vibrate the concrete."

   C. Remove Sections 9.1.2 and 9.1.3

METHODS OF SAMPLING AND TESTING
MT 119-04
MOISTURE CORRECTION FOR CONCRETE MIX DESIGNS
(*Montana Method*)

1 Scope

1.1 This method describes the procedure for making a correction in the moisture requirement of a concrete mix, due to absorbed moisture. Concrete mix designs furnished by the Materials Bureau are based on saturated surface dry aggregate and the moisture correction must be made when concrete is produced. Moisture may be figured on a one sack basis or on a one cubic meter (one cubic yard) basis. A typical Class "A" mix for one sack of cement would be shown as: 94 - 213 - 190 - 190.

2 Moisture Requirement

2.1 The example mix makes no mention of water as it is controlled by slump requirements, but for the purpose of mix designs it is assumed to be 22.7 liters (6 gallons) per sack of cement. 22.7 liters (6 gallons) is not a specified amount to be used, and in fact, a lesser amount will most generally obtain the required slump. 22.7 liters (6 gallons) per sack is the maximum net amount of water which may be used under Montana Specifications, and includes free water in excess of water absorbed by the aggregates, additives, air entraining agents, etc.

2.2 It is impossible for the Materials Bureau to know in advance what the moisture condition of the aggregate stockpiles will be when concrete is ultimately produced, so the following procedure is to be observed.

3 Absorption of Fine Aggregate

3.1 Fine aggregate will always require an adjustment for the moisture content. Moisture content will seldom be less than 3% or more than 7%. The moisture correction is made by multiplying the aggregate weight shown by 100 plus the percentage of moisture in the material. If a moisture determination shows that the sand has 5% total moisture, multiply the sand weight shown by 105%. This would make the new sand weight about 102 Kg (224 pounds), which would total about 5 Kg (11 pounds) of water (free and absorbed) or approximately 5.0 liters (1-1/3 gallons) per sack.

3.2 If the fine aggregate has an absorption of 1.0%, the amount of water that can be counted as free water (mix water) would be computed as follows:

3.2.1 5.0% (total moisture) minus 1.0% (absorption) equals 4.0% free water.

3.2.2 96.6 Kg (213 lbs.) x .04 (4% free water) equals approximately 3.9 Kg (8.5 lbs.) free water.

3.2.3 Therefore, only 3.9 Kg (8.5 lbs.) of water would be counted as mix water.

4 Absorption of Coarse Aggregate

4.1 Medium and coarse aggregate are open-graded and free draining and will not usually require a correction for moisture unless they are being used directly from a washing plant or are being heated with live steam.

4.2 If a correction is deemed necessary, the procedure shown for fine aggregate will be followed.

5 Corrected Mix

5.1 The corrected mix would be: 94 - 224 - 190 - 190.

METHOD OF SAMPLING AND TESTING
MT 121-16
EFFECT OF ORGANIC IMPURITIES IN FINE AGGREGATE ON STRENGTH OF MORTAR
(*Modified* AASHTO T 71)

MT 121 is identical to AASHTO T 71 except for the following stipulations:

1. Section 5.5.2 – Remove

2. Section 5.5.4 – Replace with the following:

   "Rinsing the Aggregate – Continuously rinse the aggregate in a compact aggregate drum washer for two hours. Set the flow rate and angle of the wash water such that there are no losses of fine materials during the washing cycle."

3. Section 5.5.5 – Remove

4. Section 6.3 – Remove

5. Sections 7.5 and 7.6 – Remove

METHODS OF SAMPLING AND TESTING
MT 122-13
OPTIMIZED AGGREGATE GRADATION FOR HYDRAULIC CEMENT CONCRETE MIX DESIGNS

1 Scope

1.1 This method outlines the procedure for analyzing combined aggregate gradations for optimized concrete mix designs.

2 Referenced Documents

MT Materials Manual

MT 201 Sampling Roadway Materials
MT 202 Sieve Analysis for Fine and Coarse Aggregate

3 Apparatus

3.1 The apparatus required for sampling aggregates and performing sieve analysis will be as stated in MT 201 and MT 202.

4 Procedure:

4.1 Submit sieve analysis reports showing the cumulative combined percent passing, the cumulative combined percent retained, and the combined percent retained as shown in the sieve analysis Table 1. Include in the report, each individual aggregate gradation starting with the largest appropriate sieve for that material and including all the consecutive smaller sieve sizes through the #200 (75-µm) sieve. They are to include: 1 1/2-in. (37.5-mm), 1-in. (25-mm.), 3/4-in. (19-mm), 1/2-in. (12.5-mm), 3/8-in. (9.5-mm), #4 (4.75-mm), #8 (2.3-mm), #16 (1.18-mm), #30 (60-µm), #50 (300-µm), #100 (150-µm), and #200 (75-µm) sieves. For coarse and intermediate aggregates, the #16 (1.18-mm) through #100 (150-µm) sieves may be determined mathematically.

4.2 Submit the following charts used to perform aggregate gradation analysis:

- Coarseness Factor Chart (Figure 1)
- 0.45 Power Chart (Figure 2)
- Percent Retained Chart (Figure 3)

4.3 Perform a sieve analysis according to MT 202 for each aggregate that will be used in the optimized mix design. Complete a sieve analysis with the percent passing and the relative percent volume of each aggregate used in the proposed mix design as shown in Table 1.

Table 1: Sieve Analysis

% Passing Agg (P)	Coarse Aggregate			Mid	Fine Aggregate		Combined Aggregate		Each Sieve
	1	2	3	1	1	2			
Sieve	% Passing	% Passing	% Passing	% Passing	% Passing	% Passing	**% Passing (C_P)**	**% Retained (C_R)**	**% Retained (C)**
2 in.	100.0%	0.0%	0.0%	100.0%	100.0%	0.0%	100.0%	0.0%	0.0%
1 1/2 in.	100.0%	0.0%	0.0%	100.0%	100.0%	0.0%	100.0%	0.0%	0.0%
1 in.	100.0%	0.0%	0.0%	100.0%	100.0%	0.0%	100.0%	0.0%	0.0%
3/4 in.	96.0%	0.0%	0.0%	100.0%	100.0%	0.0%	97.8%	2.2%	2.2%
1/2 in.	63.0%	0.0%	0.0%	100.0%	100.0%	0.0%	79.7%	20.4%	**18.2%**
3/8 in.	28.0%	0.0%	0.0%	95.0%	100.0%	0.0%	60.0%	**40.1%**	19.7%
No. 4	9.0%	0.0%	0.0%	65.0%	100.0%	0.0%	46.8%	53.2%	13.2%
No. 8	2.0%	0.0%	0.0%	3.0%	96.0%	0.0%	**35.9%**	**64.1%**	10.9%
No. 16	1.0%	0.0%	0.0%	1.0%	76.0%	0.0%	28.0%	72.0%	7.9%
No. 30	0.0%	0.0%	0.0%	0.0%	45.0%	0.0%	16.2%	83.8%	11.8%
No. 50	0.0%	0.0%	0.0%	0.0%	17.0%	0.0%	6.1%	93.9%	10.1%
No. 100	0.0%	0.0%	0.0%	0.0%	6.0%	0.0%	2.2%	97.8%	4.0%
No. 200	0.0%	0.0%	0.0%	0.0%	1.0%	0.0%	0.4%	99.6%	1.8%
Pan	0.0%	0.0%	0.0%	0.0%	0.0%	0.0%	0.0%	100.0%	0.4%
Blend % (R)	**55.0%**	**0.0%**	**0.0%**	**9.0%**	**36.0%**	**0.0%**	100.0%		

5 Calculations

5.1 Calculate the cumulative combined percent passing each sieve using the following equation:

$$C_P = \sum \{(P_A)(R_A)\}$$

where:

C_P = Cumulative Combined % Passing
P_A = % Passing of Aggregate
R_A = Relative % of Aggregate

5.2 Calculate the cumulative combined percent retained on each sieve using the following equation:

$$C_R = 100\% - C_P$$

where:

C_R = Cumulative Combined % Retained
C_P = Cumulative Combined % Passing

5.3 Calculate the combined percent retained on each sieve using the following equation:

$$C = C_R - C_{RX}$$

where:

C = Combined % Retained
C_R = Cumulative Combined % Retained
C_{Rx} = Cumulative Combined % Retained of next larger sieve size

6 Charts

6.1 *Coarseness Factor Chart*—Use the cumulative combined sieve analysis to determine the coarseness and workability factors. Plot the coarseness and workability factors on the Coarseness Factor Chart (Figure 1).

Determine the coarseness factor using the following equation:

$$\mathrm{CF} = \left(\frac{\mathrm{S}}{\mathrm{T}}\right) \text{ x } 100$$

where:

CF = Coarseness Factor
S = Cumulative % Retained on the 3/8 in. Sieve
T = Cumulative % Retained on the No. 8 Sieve

The workability factor is the cumulative combined percent passing the No. 8 sieve. Increase the workability factor by 2.5 percentage points for every 94 lb. per cubic yard of cementitious material used in excess of 564 lb. per cubic yard in the mix design. Decrease the workability factor by 2.5 percentage points for every 94 lb. per cubic yard of cementitious material used below 564 lb. per cubic yard in the mix design. Do not adjust the workability factor if the amount of cementitious material is 564 lb. per cubic yard.

The coarseness factor and workability factor must plot within the workability box defined as follows:

- coarseness factor must not be greater than 68 or less than 52
- workability factor must not be greater than 38 or less than 34 when the coarse factor is 52
- workability factor must not be greater than 36 or less than 32 when the coarseness factor is 68

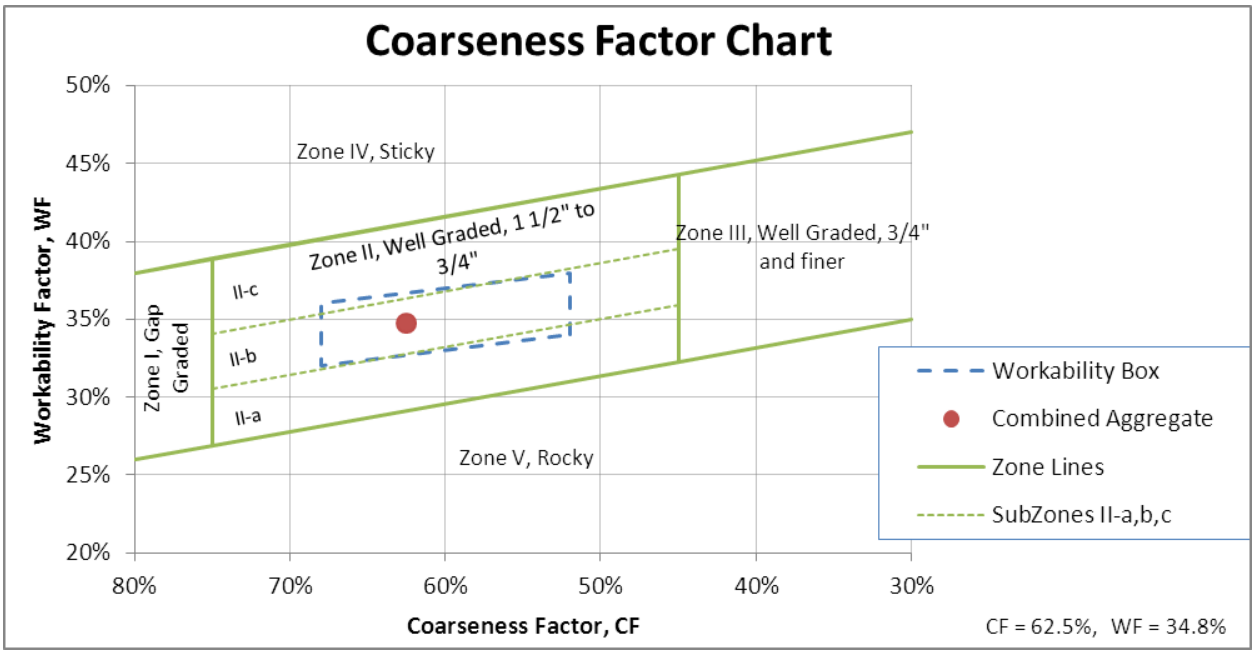

Figure 1: Coarseness Factor Chart

6.2 *0.45 Power Chart*—The 0.45 Power Chart (Figure 2) is created by plotting the cumulative percent passing (y-axis) vs. the sieve sizes raised to the power of 0.45 (x-axis). The cumulative percent passing should generally follow the maximum density line and should not deviate beyond the maximum and minimum tolerance lines. There may be a "hump," beyond the tolerance line and above the maximum density line around the No. 16 sieve. There will always be a dip below the maximum density line around the No. 30 sieve. These deviations are typical and should not be cause for rejection of a gradation unless results from trial batches indicate workability problems.

The maximum density line is a straight line calculated with the following equation:

$$P = \left(\frac{d}{D}\right)^{0.45}$$

where:

P = % Passing
d = sieve size being considered
D = nominal maximum sieve size

The nominal maximum sieve size is one sieve larger than the first sieve to retain ≥10%.

The tolerance lines are straight lines drawn on either side of the maximum density line. Draw the tolerance lines from the origin of the chart to 100% of the next sieve size smaller and larger than the maximum density sieve size.

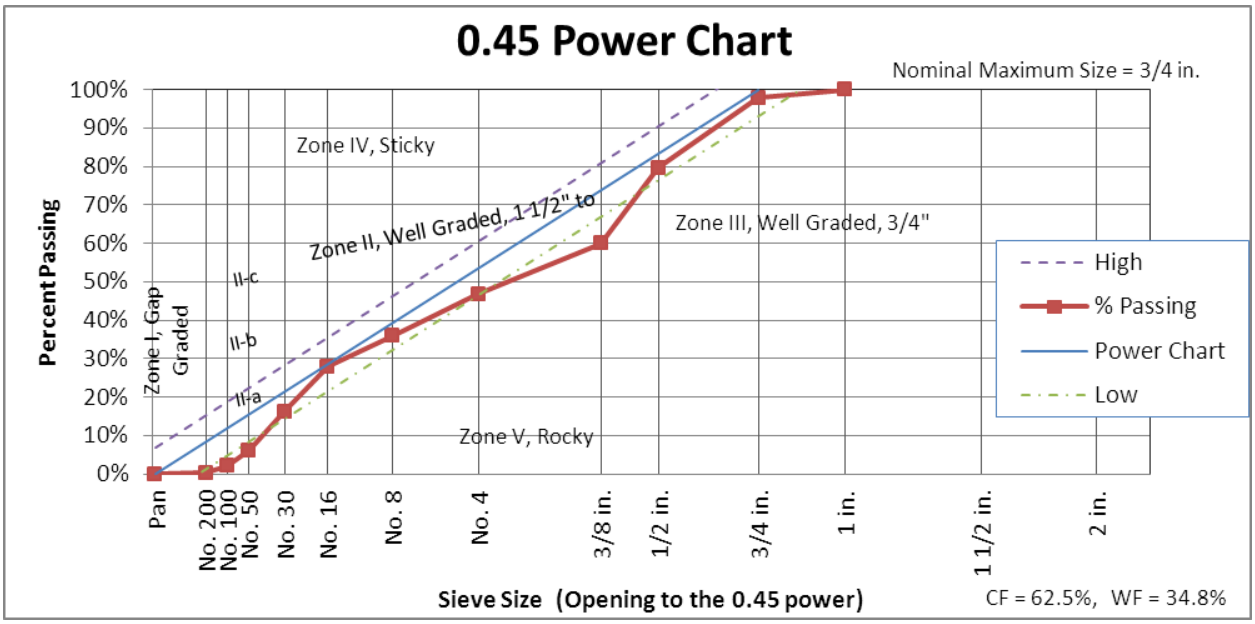

Figure 2: 0.45 Power Chart

6.3 *Percent Retained Chart*—Create the Percent Retained Chart (Figure 3) by plotting the combined percent-retained (y-axis) vs. the sieve sizes (x-axis). The sum of the percent retained on any two adjacent sieves, excluding the first and last sieve that retains material, must not be less than 13%.

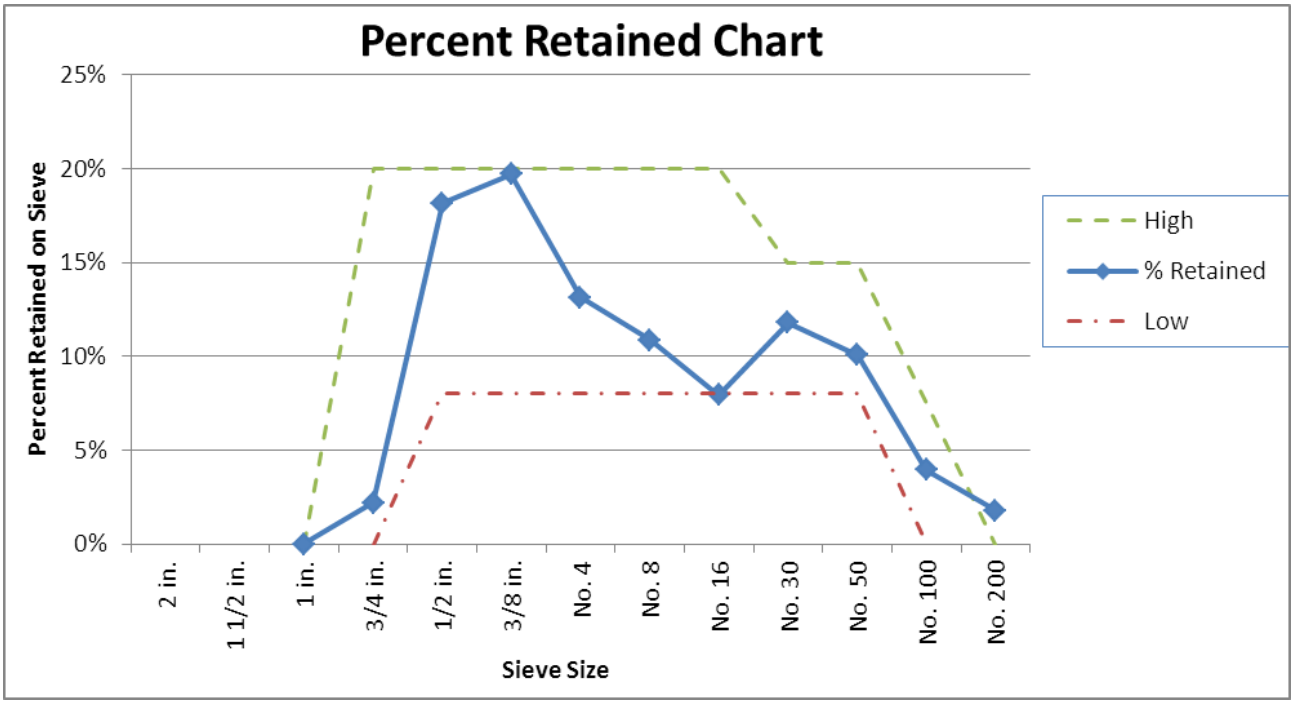

Figure 3: Percent Retained Chart

6.4 *MDT Optimized Gradation Worksheet* — May be used to perform the aggregate gradation analysis. It allows the user to input sieve analysis results and aggregate percentages, generating all of the previous charts.

MDT Optimized
Gradation Charts.XLS

6.5 *Selection of Optimized Aggregate Gradation* — Use the aggregate gradations and proportions that plot within the limits of the three charts described above as the basis for trial batches. Perform trial batches with varying aggregate proportions meeting the limits of the three previous charts to determine which concrete mix proportions meet contract requirements.

The Materials Bureau may allow the use of aggregate gradations and proportions that exceed the limits of the 0.45 Power Chart and the percent-retained chart. This may be permitted if the coarseness and workability factors plot within the workability box on the Coarseness Factor Chart and the trial batch results meet all contact requirements.

6.6 *Aggregate Gradation Monitoring and Aggregate Proportion Adjustment* — Monitor the aggregate gradation by plotting the results of each sieve analysis on the three previous charts. Perform sieve analysis on a lot by lot basis determined by MT 601.

Any adjustments to the aggregate proportions during concrete production to keep the coarseness factor and workability factor plotted within the workability box on the Coarseness Factor Chart are subject to the Project Manager's approval.

CURRENT DATE OF REVISION
MT 200 SECTION
SOIL AND AGGREGATE

Test Method No.	Title	Pages	Date of Publication or Revision
MT 200	Dry Preparation of Disturbed Soil and Soil Aggregate Samples for Test.....	pp 1-4	Jun 2004
MT 201	Sampling Roadway Materials.....	pp 1-7	Oct 2013
MT 202	Sieve Analysis for Fine and Coarse Aggregate.....	pp 1-9	Nov 2011
MT 203	Unit Weight of Aggregate.....	pp 1-6	Jun 2004
MT 204	Specific Gravity and Absorption of Fine Aggregate.....	pp 1-5	Jun 2004
MT 205	Specific Gravity and Absorption of Coarse Aggregate.....	pp 1-6	Jun 2004
MT 206	Terms Relating to Density and Specific Gravity of Solids, Liquids and Gases	pp 1-3	Jun 2004
MT 207	Centerline Soil Survey.....	pp 1-10	Jun 2004
MT 208	Determining the Liquid Limit, Plastic Limit, and Plasticity Index of Soils……	pp 1-12	Aug 2014
MT 209	Los Angeles Abrasion (Wear Test).....	pp 1-4	Jun 2004
MT 210	Moisture-Density Relations of Soils Using 5.5 lb. Rammer and 12 In. Drop…..	pp 1-8	Aug 2014
MT 211	Moisture-Density Relations of Soil-Cement Mixtures.....	pp 1-6	Jun 2004
MT 212	Determination of Moisture and Density of In-Place Materials	pp 1-5	Jun 2004
MT 213	Plastic Fines in Graded Aggregates (Sand Equivalent Test).....	pp 1-8	Jun 2004
MT 214	Classification of Soil and Soil-Aggregate Mixtures.....	pp 1-8	Dec 2009
MT 215	Vacant (moved to MT 122)		
MT 216	Method of Sampling and Testing Cement Treated Base	pp 1-5	Oct 2013
MT 217	Method for Determining Percentage of Mechanically Fractured Particles	pp 1-5	Jun 2004
MT 218	Determining Relative Compaction and Percent Moisture	pp 1-2	Jun 2004
MT 219	Controlling Compaction Using a Control-Strip Test-Section Technique with Nuclear Gauges	pp 1-4	Jun 2004
MT 220	Specific Gravity of Soils.....	pp 1-5	Jun 2004
MT 221	Total Evaporable Moisture Content of Aggregate by Drying	pp 1-3	Jan 2006
MT 222	Method of Test for Determining the In-Place Moisture and Density of Soils by the Sand Cone Method.....	pp 1-5	Nov 2004
MT 223	Clay Lumps and Friable Particles in Aggregates	pp 1-3	Jun 2004
MT 224	Terms Relating to Subgrade, Soil Agg and Fill Materials (formerly MT 511)	pp 1-2	Jun 2004
MT 225	Failing and Check Samples of Aggregates.....	pp 1-2	Jun 2004
MT 226	Maximum Acceptable Deviations in Sieve Analysis of IA Samples	pp 1-7	Jun 2004
MT 227	Method of Test for Determination of Moisture Content of Soils……..	pp 1-2	Jun 2004
MT 228	Method of Establishing Field Target Density for Cement Treated Base Density Control.....	pp 1	Oct 2013
MT 229	Procedure for Solids-Water-Voids Relations of Soil Masses……	pp 1-12	Sep 2015

CURRENT DATE OF REVISION
MT 200 SECTION
(SOIL AND AGGREGATE)

Test Method No.	Title	Pages	Date of Publication or Revision
MT 230	Moisture-Density Relation of Soils Using a 10 lb Rammer and 18 In. Drop..	pp 1-8	Jun 2008
MT 231	Procedure for Correction for Coarse Particles in the Soil Compaction Test….	pp 1-5	Jun 2004
MT 232	Soil Corrosion Test.....	pp 1-3	Jun 2004
MT 233	Resistance of Coarse Aggregate to Degradation by Abrasion in the Micro-Deval Apparatus……	pp 1-6	Jul 2007

METHODS OF SAMPLING AND TESTING
MT 200-04
DRY PREPARATION OF DISTURBED SOIL AND SOIL AGGREGATE SAMPLES FOR TEST
(Modified AASHTO T 87)

1 Scope:

1.1 This method describes the dry preparation of soil and soil-aggregate samples, as received from the field, for mechanical analysis, physical tests, moisture-density relations test, and other tests as may be desired.

2 Apparatus:

2.1 *Balance* **-** A balance sensitive to 0.1 g for samples weighing approximately 110 g or less; for larger samples, the balance shall be sensitive to within 0.1 percent of the sample to be weighed.

2.2 *Drying Apparatus* - Any suitable device capable of drying samples at a temperature not exceeding 60 C (140 F),

2.3 *Sieves* - A series of sieves of the following sizes: 19.0 mm (¾ in.), 4.75 mm (No. 4), 2.00 mm (No. 10), 0.425 mm (No. 40) and others as required for preparing the sample for a specific test. The sieves shall conform to MT-405, Sieves for Testing Purposes.

Note 1 - A 50 mm (2 in.) sieve is required if the sample includes particles retained on the 10.0 mm (¾ in.) sieve and it is desired that the sample for moisture-density relations (AASHTO T 99 or T 180) contain material between 19.0 mm (¾ in.) and 4.75 mm (No. 4) sieve size to represent the fraction between 50 and 19.0 mm (2 in. and ¾ in.).

2.4 *Pulverizing Apparatus* - Either a mortar and rubber-covered pestle or a mechanical device consisting of a power-driven rubber-covered muller suitable for breaking up the aggregations of soil particles without reducing the size of the individual grains.

Note 2 - Other types of apparatus, such as a revolving drum into which the soil sample and rubber-covered rollers are placed and tumbled until soil aggregations are pulverized, are satisfactory if the aggregations of soil particles are broken up without reducing the size of the individual grains.

2.5 *Sample Splitter* - A suitable riffle sampler or sample splitter for proportional splitting of the sample and capable of obtaining representative portions of the sample without appreciable loss of fines. The width of the container used to feed the riffle sample splitter should be equal to the total combined width of the riffle chutes. Proportional splitting of the sample on a canvas cloth is also permitted.

Note 3 - The procedure for proportional splitting is described in MT 607, Reducing Field Samples of Aggregate to Testing Size.

3 Sample Size:

3.1 The amounts of soil material required to perform the individual tests are as follows:

3.1.1 *Particle Size Analysis of Soils* (AASHTO T 88)-- For the particle size analysis material passing a 2.00 mm (No. 10) sieve is required in amounts equal to approximately 110 g for sandy soils and approximately 60 g of silty or clayey soils. A sufficient amount of material retained on either the 4.75 mm (No. 4) sieve or 2.00 mm (No. 10) sieve is required (Note 4) to obtain a representative gradation, and depending on the maximum particle size, shall not be less than the amount shown in the following table:

3 Sample Size: (continued)

Diameter of Largest Particle, mm (in.)	Approximate Minimum Mass of Portion, kg
9.5 (3/8)	0.5
25.0 (1)	2.0
50 (2)	4.0
75 (3)	5.0

Note 4 - The material for coarse sieve analysis may be separated by either of two alternate methods, 4.2.1 (2.00 mm sieve) or 4.2.2 (4.75 mm sieve). When only a small percentage of the material will be retained on the 4.75 mm or 2.00 mm sieve, a considerable total weight of sample will be required to provide the minimum quantity shown in the above table; consequently, if the material represented by the sample is not to be used in a base or sub-base course, select borrow, or other item having a requirement for coarse aggregate adherence to the minimum weight requirements in the above table may not be necessary.

3.1.2 *Specific Gravity (AASHTO T 100)* - For the specific gravity test performed in conjunction with AASHTO T 88, Mechanical Analysis, Soils, Material passing the 2.00 mm (No. 10) sieve is required in the amounts (oven-dry) of at least 25 g when the volumetric flask is used and at least 10 g when the stoppered bottle is used.

3.1.3 *Physical Tests* - For the physical tests, material passing the 0.425 mm (No. 40) sieve is required in the total amount of at least 300 g, allocated approximately as follows:

Test (and AASHTO Designation)	Approx. Mass, g.
Liquid limit (T 89)	100
Plastic limit (T 90)	20
Shrinkage factors (T 92)	30
Field moisture equivalent (T 93)	50
Check the referee tests	100

3.1.4 *Moisture-Density Relations (MT-210)* - For moisture-density relations test, the following approximate amounts of material are required:

Soil Material Passing, Sieve		Approximate Quantity Required		
Method		mm	lb.	kg.
A	4 Mesh	4.75	7	3.2
B	4 Mesh	4.75	16	7.3
C	3/4 Inch	19.00	12	5.4
D	3/4 Inch	19.00	25	11.3

3.1.5 *Other Tests* - For quantity of material required for testing, refer to the specific method of test.

4 Initial Preparation of Test Samples:

4.1 The soils sample as received from the field shall be dried thoroughly in air or the drying apparatus at a temperature not exceeding 60 C (140 F). A representative test sample of the amount required to perform the desired tests (Section 3) shall then be obtained with the sampler, or by splitting or quartering. The aggregations of soil particles shall then be broken up in the pulverizing apparatus in such a way as to avoid reducing the natural size of individual particles.

Note 5 - Samples dried in an oven or other drying apparatus at a temperature not exceeding 60 C (140 F) are considered to be air dried.

4 Initial Preparation of Test Samples: (continued)

4.2 The portion of the dried sample selected for particle size analysis and physical tests (including specific gravity) shall be weighed and that weight recorded as the weight of total sample uncorrected for hygroscopic moisture. This portion shall then be separated into fractions by one of the following methods:

4.2.1 *Alternate Methods Using 2.00 mm (No. 10) Sieve* - The dried sample shall be separated into two fractions using a 2.00 mm sieve. the fraction retained on the sieve shall be ground with the pulverizing apparatus until the aggregations of soil particles are broken into separate grains. The ground soil shall then be separated into two fractions using the 2.00 mm sieve.

4.2.2 *Alternate Method Using 4.75 mm and 2.00 mm (No. 4 and No. 10) Sieves* - The dried sample shall first be separated into two fractions using a 4.75 mm sieve. The fraction retained on this sieve shall be ground with the pulverizing apparatus until the aggregation of soil particles are broken into separate grains, and again separated on the 4.75 mm sieve. The fraction passing the 4.75 mm sieve shall be mixed thoroughly and, by the use of the sampler or by splitting and quartering, a representative portion adequate for the desired tests shall be obtained and weighed. This split-off portion shall then be separated on the 2.00 mm sieve, and processed as in 4.2.1. The material from the split-off fraction that is retained on the 2.00 mm sieve shall be weighed for later use in coarse sieve analysis computations.

5 Test Sample for Particle Size Analysis and Specific Gravity:

5.1 The fraction retained on the 2.00 mm (No. 10) sieve in 4.2.1 or that retained on the 4.75 mm (No. 4) sieve in 4.2.2, after the second sieving, shall be set aside for use in sieve analysis of the coarse material.

5.2 The fraction passing the 2.00 mm (No. 10) sieve in both sieving operations in 4.2.1 or 4.2.2 shall be thoroughly mixed together and, by the use of the sampler or by splitting or quartering, representative portions having approximate weights as follows shall be obtained: (1) for the hydrometer analysis and sieve analysis of the fraction passing the 2.00 mm sieve, 110 g for sandy soil and 60 g for silty or clayey soils; and (2) for specific gravity, 25 g when the volumetric flask is to be used and 10 g when the stoppered bottle is to be used.

6 Test Sample for Physical Tests:

6.1 The remaining portion of the material passing the 2.00 mm (No. 10) sieve shall then be separated into two parts by means of a 0.425 mm (N. 40) sieve. The fraction retained on the 0.425 mm (No. 40) sieve shall be ground with the pulverizing apparatus in such a manner as to break up the aggregations without fracturing the individual grains. If the sample contains brittle particles, such as flakes of mica, fragments of sea shells, etc., the pulverizing operation shall be done carefully and with just enough pressure to free the finer material that adheres to the coarser particles. The ground soil shall then be separated into two fractions by means of the 0.425 mm (N. 40) sieve and the material shall be reground as before. When repeated grinding produces only a small quantity of soil passing the No. 40 sieve, the material retained on the No. 40 sieve shall be discarded.
The several fractions passing the No. 40 sieve obtained from the grinding and sieving operations just described shall be thoroughly mixed together and set aside for use in performing the physical tests.

7 Test Sample for the Moisture Density Relations:

7.1 The portion of dried soil selected for the moisture-density relations test shall be separated by means of the required sieve as specified in Section 3.1.4. If necessary, the pulverizing apparatus shall be used to break up the soil aggregations retained on this sieve into separate grains. The

ground soil shall then be separated into two fractions using the required sieve.

7 Test Sample for the Moisture Density Relations: (continued)

7.2 The fraction retained on the sieve after the second sieving shall be saved, if required. The fractions passing the required sieve in both sieve operations shall be thoroughly mixed and used for the moisture-density test.

METHODS OF SAMPLING AND TESTING
MT 201-13
SAMPLING ROADWAY MATERIALS

1 General:

1.1 Sampling for evaluation of potential aggregate sources should be performed by a responsible, trained and experienced person. Because of the wide variety of conditions under which sampling may be done, it is not possible to describe detailed procedures applicable to all circumstances.

1.2 The sample bags must be tightly-woven and durable so that the required amount of sample can be shipped without rupture of the bag or loss of fine material through the fabric. Also, when tied, as in 1.3, the bag must be sealed tightly enough to prevent loss or contamination of the material.

1.3 Samples shall be double tied as close to the gravel as possible with the necessary papers between the double tie. This procedure insures a good sample together with a legible laboratory sheet.

2 Referenced Documents:

2.1 ***MT Manual:***

MT 101 Making and Curing Concrete Compressive and Flexural Strength Field Test Specimens
MT 202 Sieve Analysis of Fine and Coarse Aggregate
MT 207 Centerline Soil Survey
MT 210 Moisture Density Relation of Soils Using a 5.5 lb. Rammer
MT 218 Determining Relative Compaction and Percent Moisture
MT 230 Moisture Density Relation of Soils Using a 10 lb. Rammer
MT 601 Materials Sampling, Testing and Acceptance Guide
MT 607 Procedure for Reducing Filed Samples to Testing Size

3 Number of Samples:

3.1 The frequency of sampling as described in this procedure is the minimum required and more should be taken if deemed necessary.

4 Pre-construction Proposed Surfacing Sampling:

4.1 Proposed surfacing samples should represent a vertical cross-section of the proposed source.

4.1.1 Describe each site or area investigated with each test hole, boring or test pit clearly located (horizontally and vertically) with reference to some established coordinate system or permanent monument on an area map or sketch.

4.1.2 Log each test hole, boring, test pit or cut-surface exposure with the field description and location of each material encountered clearly shown by Montana Department of Transportation symbols and word descriptions used on Form 30. An example of Form 30 is in MT 207.

4.1.3 Each aggregate layer that is included in the sample should be noted along with the depth of the water table if it is encountered should be shown on the log of test holes.

4.2 Overburden or clay seams may be sampled separately.

4.3 Rocks larger than 6 inches (150mm) in diameter shall not be included in the sample. However, the estimated percentage of rock larger than 12 inches (300mm); between 6 and 12 inches (150 and 300mm); between 4 and 6 inches (100 and 150mm); and less than 4 inches (100mm) in diameter shall be shown on the Prospected Area Report.

4 Pre-construction Proposed Surfacing Sampling: (continued)

4.4 Representative samples shall be taken on the following basis:

4.4.1 Each sample shall be a minimum of 150 pounds (68 Kg).

4.4.2 Not less than 3 samples shall be taken from any proposed source.

4.4.3 Up to 50,000 cubic yards (38,230 cubic meters) - a minimum of 3 samples.

4.4.4 50,000 to 100,000 cubic yards (38,230 to 76,460 cubic meters) - 3 to 5 samples.

4.4.5 100,000 to 150,000 cubic yards (76,460 to 114,690 cubic meters) - 5 to 8 samples.

4.4.6 150,000 to 200,000 cubic yards (114,690 to 152,920 cubic meters) - 8 to 10 samples.

4.4.7 Providing the material is uniform, one sample may represent material from as many as ten test holes in large areas if provisions 4.4.1 through 4.4.6 above are met.

4.4.8 For large sources, a suggested sampling sequence is to take samples around the perimeter of the source with additional samples taken toward the middle to check for uniformity. Each proposed source is unique, however, and the final sampling sequence shall be determined by the District Materials Supervisor or Area Lab Supervisor.

4.5 The District or Area laboratory will determine the gradation, LL, PL, PI, soil class and 24-hour volume swell and submit to the Materials Bureau on a form 123. Also, a visual examination by the Materials Supervisor will be made. An interpretation of these results will determine if the material in the proposed source is worthy of further consideration.

4.5.1 Predominately Unacceptable - If the tests show the material to be predominately unsatisfactory and material of a better quality is available, no further consideration shall be given this source.

4.5.2 Uniformly Acceptable - If the tests indicate the material is uniformly satisfactory, at least one sample for every six tested in the District or Area laboratory (a minimum of three) shall be sent to the Materials Bureau. Each sample shall consist of 1-75 lb. (34 Kg) split for wear, gradation and other correlations (see note 1). Also, a 300 lb. composite sample for Mix design testing shall be submitted for these areas. Additionally, one 180 lb. (32 Kg) composite sample per source is required for Sodium Sulfate and Micro-Deval testing.

4.5.3 Spotty sources - If the tests indicate the material is spotty, at least one sample for every six tested in the District or Area laboratory (a minimum of one) for each of the areas (satisfactory, questionable, and unsatisfactory) shall be sent to the Materials Bureau for wear test, gradation check, evidence of disintegration, and other correlations. Also, a 300 lb. composite sample for Mix design testing shall be submitted for these areas. Additionally, one 180 lb. (32 Kg) composite sample per source is required for Sodium Sulfate and Micro-Deval testing.

Number of Representative Pounds from Each Hole to Make Composite

Holes	Sodium Sulfate		Micro Deval	
	Lbs.	Kg	Lbs.	Kg
2	120	54	60	27
5	24	11	12	5
10	12	5	6	3
15	8	4	4	2

4 Pre-construction Proposed Surfacing Sampling: (continued)

Note 1 - *Each area within a source that exhibits different physical characteristics should be sampled completely as per 4.5.2. In a large volume area one sample may be a composite of a series of holes of uniform material (example: sample number 1 may be a composite of holes 1 through 6; sample number 2 - holes 7 through 12; sample number 3 - holes 13 through 20, etc.) The example cited above is to be used as a guide only.*

4.5.4 Material for each portion of the composite sample shall be obtained by quartering, splitting, recombining and splitting again according to MT 607 so that a homogenous mix is obtained. The material will be split so that no more than 77 lbs. (35 Kg) are placed in one bag.

4.5.5 The Core Drill Section, under the direction of the Geotechnical Section, can be utilized in problem areas where conventional equipment is inadequate. Assistance, either geologic or drilling, can be provided usually within a period of a month or six weeks.

5 Laboratory Form No. 99:

5.1 The "Field Sample Analysis Report" Form No. 99 is to be used in reporting district or area laboratory tests. This information will be transferred to the "Available Surfacing Material Report" in Helena and will be available to prospective bidders, along with the usual Materials Bureau test results.

5.2 The District Materials Supervisor or Area Lab Supervisor is to use his experience and engineering judgment to give a summation of all information such as the past history of the source and his comments and recommendations regarding the laboratory test data which would include a statement as to which holes were represented by the Sodium Sulfate and Micro-Deval samples. This information will be placed on the bottom portion of Lab Form No. 99. However, the acceptance or rejection of the source will be the responsibility of the Materials Bureau in Helena when all testing is complete.

6 Laboratory Form No. 92:

6.1 The field information on Laboratory Form No. 92 shall include a correct legal description of the deposit. In some cases, it may be necessary to have a survey party retrace the boundary lines and make section line ties before right-of-way negotiations can be completed. Where deposits are located adjacent to the highway right-of-way, the boundary lines of the deposit should be tied to the centerline and shown on Laboratory Form No. 92 so that a legal description can be prepared without any further field work. Under some circumstances, the Department of Transportation will obligate by purchase or option surfacing material sources for future construction projects and maintenance use.

6.2 Form No. 92 "Prospected Area Report" must be completely filled out especially with reference to definite location, total yardage represented by the samples, ownership, and depth of overburden. The haul distance shall be reported to the nearest one-tenth mile over the shortest and most practical route from the deposit to a definite station on the project.

6.3 A sketch shall be attached Form No. 92 showing the boundary lines of the deposit with all dimensions and ties neatly plotted to a scale that is indicated on the sketch. All test holes shall be numbered and shown in their correct location.

6.4 In those cases where areas are being explored on which data has been previously submitted, a new "Prospected Area Report" shall accompany the new sampling showing any laboratory numbers previously assigned.

7 Reports on Proposed Surfacing Sources:

7.1 The Materials Bureau will issue a final report based on an evaluation of the district or area laboratory test data, the recommendations of the District Materials Supervisor or Area Lab Supervisor, and an interpretation of tests performed by the Materials Bureau.

8 Preconstruction Binder Samples:

8.1 Binder samples shall be taken incidental to all proposed gravel source exploration. A 25 lb. (11 Kg) sample from each distinct type proposed for use shall be taken and tested in the district or area laboratory. Binder samples need not be sent to the Materials Bureau unless an unusual problem arises.

9 Size of Samples: Required for District, Area and Materials Bureau Testing:

9.1 The sample size depends on 100% of the aggregate passing the specified sieve size. The amounts specified in the table below provide adequate material for routine testing (gradation, LL, PI, volume swell, etc.). **Minimum Field Test sample sizes are in MT 202.**

SPECIFIED 100% PASSING SIEVE SIZE	MINIMUM WEIGHT OF SAMPLE (See Note 2)	
4.75 mm (4 Mesh)	14 Kg	(30 lb.)
9.5 mm (3/8 Inch)	14 Kg	(30 lb.)
12.5 mm (1/2 Inch)	14 Kg	(30 lb.)
16.0 mm (5/8 Inch)	14 Kg	(30 lb.)
19.0 mm (3/4 Inch)	14 Kg	(30 lb.)
25.0 mm (1 Inch)	35 Kg	(77 lb.)
37.5 mm (1½ Inch)	35 Kg	(77 lb.)
50 mm (2 Inch)	35 Kg	(77 lb.)
63 mm (2½ Inch)	35 Kg	(77 lb.)

Note 2 - *The sample shall be obtained by quartering or splitting to insure a representative sample. If necessary, the representative sample shall be split again so that no more than 77 lbs. (35 Kg) are placed in two bags.*

10 Sampling from Stockpiles:

10.1 When such sampling is necessary, every effort should be made to enlist the services of power equipment to develop a separate, small sampling pile composed of materials drawn from various levels and locations in the main pile after which several increments may be combined to compose the field sample.

10.2 Coarse Aggregate Stockpiles - Where power equipment is not available, samples from stockpiles should be made up of at least three increments taken from the top third, at the midpoint, and at the bottom third of the volume of the pile. A board shoved vertically into the pile just above the sampling point aids in preventing further segregation.

10.3 Fine Aggregate Stockpile - A suggested sampling procedure for fine aggregate would be to remove the outer layer, which may have become segregated and take the sample from the material beneath. Sampling tubes approximately 1¼ inches (30-mm) minimum by 6 feet (2-m) minimum in length may be inserted into the pile at random locations to extract a minimum of five increments of material to form the sample.

11 Production Sampling:

11.1 Production samples shall be taken in three equal increments from a stopped belt or with an automatic sampling device and combined to make the sample. Such samples shall be reduced to testing size, according to MT 607, Method A or Method B.

12 Windrow Sampling (Cement Treated Base and Cold In-Place Recycle):

12.1 Samples should be composed of a number of samples taken at various points along the windrow, combined and reduced to testing size according to MT 607, Method A or Method B.

13 Pug Mill - Mixed Aggregate Sampling:

13.1 Samples for gradation and fracture testing shall be taken from a minimum of three increments from the processed material on the roadway after lay down.

13.2 Samples for crushed cover material gradation and fracture will be taken at the most convenient point before application determined by the engineer.

13.3 Samples for other specified properties will be taken at the point of production.

14 Sampling from Roadway:

14.1 Samples from the roadway (minimum of three increments) should be taken for the full depth of the material, taking care to exclude any underlying material. Where necessary, place templates on the existing roadway to separate the underlying material from the sample. The sample shall be taken from the processed material on the roadway after laydown.

14.2 District or Area labs will determine the gradation, LL, PL, PI and soil class for Soil Survey “R” Value samples. The results will be reported on a form 123 which will accompany the sample to the Materials Bureau.

15 “**Special Borrow**”**:**

15.1 District or Area labs will determine the gradation, LL, PL, PI and soil class for Special Borrow “R” Value samples. The results will be reported on a form 123 which will accompany the sample to the Materials Bureau.

16 Reduction of Sample Size by Quartering or Splitting:

16.1 The procedure for reducing the size of field sample of aggregate is described in MT 607.

17 Required Production Samples other than Aggregates for Plant Mix:

17.1 Field testing for Acceptance shall conform to the frequency as shown in MT 601, under "Aggregate Surfacing".

18 Independent Assurance Samples:

18.1 The District or Area laboratories shall take Independent Assurance samples in accordance with the frequency shown in MT 601. The same sample shall be tested by each lab, with all the material returned to the sample.

18.2 If discrepancies occur between the District or Area laboratory and the Acceptance samples, the District or Area laboratory will investigate and change any procedures or equipment found to be causing the differences.

18 Independent Assurance Samples: (continued)

18.3 If differences are found to exist between the District or Area laboratory and the Materials Bureau, the Materials Bureau will have the authority to investigate all of the testing procedures and make any changes found necessary.

19 Plant Mix Aggregates:

19.1 Sampling will be in accordance with the sample size and frequency described in MT 601 and the following:

19.2 *WHEN STOCKPILED* - In order to establish a stockpile average, the samples shall be secured and tested as the stockpile is being produced.

19.3 *BATCH TYPE HOT PLANT*- A representative sample of dried aggregate shall be provided by means of an approved sampling device.

19.4 *DRYER DRUM HOT PLANT* - A representative composite sample shall be provided, by means of an approved sampling device, at a point just prior to the aggregate entering the dryer drum mixer.

19.5 *CONTINUOUS FLOW HOT PLANT* - A representative sample of dried aggregate shall be provided by means of an approved sampling device.

20 Aggregates for Design:

20.1 **MAINTENANCE MIX DESIGN** - The amount of material submitted to the Materials Bureau for a proposed mix design shall be as follows: Plant Mix Aggregate - 300 lbs. (136 Kg), Seal and Cover Aggregate - 150 lbs. (68 Kg).

20.2 The sample shall be prepared in the district or area laboratory as described in 19.2 and 19.3.

20.3 Non-Quality Assurance Projects

20.3.1 When a satisfactory stockpile average has been established, a sieve analysis shall be performed, in the District or Area laboratory, on a representative sample of the stockpiled material.

20.3.2 Compare the sieve analysis obtained in paragraph 19.2 above, to the established stockpile average.

20.3.3 If the minus 4 mesh portion of the sample is within plus or minus 2% and the minus 200 mesh portion is within plus or minus 1% of the stockpile average, the sample may be submitted to the Materials Bureau for a mix design, without further preparation.

20.3.4 If the sample does not meet the above criteria, it will be necessary to adjust the gradation, in the District or Area laboratory, to allowable variations described in paragraph 20.2.3 above, before it is shipped to the Materials Bureau.

20.3.5 The stockpile average shall be shown on the laboratory work sheet that accompanies the sample.

21 Mineral Filler:

21.1 One 2.3 Kg (5 lb.) sample per project of mineral filler will be sampled and submitted to the Materials Bureau for testing and acceptance.

22 Compaction Samples:

22.1 The District or Area laboratory shall run at least one sample from each different soil type using the methods described in MT 210 or MT 230. It will not be necessary to submit compaction samples to the Materials Bureau. If the material being sampled consists of fine material, 30 pounds (14 Kg) shall be obtained. If the material consists of coarse and fine material, the sample shall be large enough to yield 30 lbs. (14 Kg) of the fine material (minus 4 mesh).

23 Field Density Tests:

23.1 Field density tests shall be taken in accordance with MT 601, under "Density Control, Embankment" and MT 218 (Determining Relative Compaction and Percent Moisture).

24 Concrete Aggregates:

24.1 Concrete aggregate samples shall be submitted in accordance with MT 601.

25 Concrete Test Specimens:

25.1 Concrete compressive and flexural strength test specimens will be made and cured in accordance with MT 101.

26 Cement Treated Base:

26.1 Cement Treated Base shall be sampled in accordance Section 12.1 or Section 14.1, and MT 601.

27 Field Construction Sampling:

27.1 Samples for soil classification and “R” value shall be obtained from the top 2 feet (0.6 meters) of the sub-grade. Sample frequency will be one sample every 1000 feet (305 meters) for projects with 3 or more cuts or fills per mile. If the project has fewer than 3 cuts or fills per mile the sample distance is extended to 2000 feet (610 meters).

27.2 District/Area lab personnel will determine the soil classification. If the soil class is not equal to or better than that used by the Surfacing Design Unit to determine the typical section, then samples for “R” value determination are to be submitted to the Materials Bureau in Helena.

27.3 Samples for soil classification and/or “R” value are not required when the top two feet of subgrade is constructed with Special Borrow tested and accepted at the borrow source. However, samples may be obtained from the roadway and tested to ensure the in-place material meets the contract requirements. Take samples whenever the material delivered to the roadway appears to differ from samples used for pit acceptance. Sample frequency is at the discretion of the Project Manager.

NOTE: *These samples are as a design check only. Sampling every 1000 feet (305 meters) is a general guide and some discretion should be used. For example, it may be advisable to take more samples in fill sections than cut sections, or if there is an obvious change in the soil conditions or soil class, etc. No samples will be required for typical sections with a design “R” of 5 or less or for soils classified as A-6 or A-7.*

METHODS OF SAMPLING AND TESTING
MT 202-11
SIEVE ANALYSIS OF FINE AND COARSE AGGREGATES
(Modified AASHTO T 11 and T 27)

1 Scope:

1.1 This method covers the determination of the particle size distribution of fine and coarse aggregates by sieving.

1.2 Material passing the 4.75 mm (no. 4) sieve will be washed. Clay particles and other aggregate particles that are dispersed by the wash water, as well as water-soluble materials, will be removed from the aggregate during testing.

2 Referenced Documents:

2.1 ***AASHTO:***
M231 Weighing Devises Used in the Testing of Materials
T11 Materials Finer Than 75-µm (No. 200) Sieve in Mineral Aggregates by Washing
T27 Sieve Analysis of Fine and Coarse Aggregates

MT Manual:
MT 201 Sampling Roadway Materials
MT 405 Wire Cloth Sieves for Testing Purposes
MT 607 Reducing Field Samples of Aggregate to Testing Size

3 Definitions:

3.1 **Constant Mass*:*** Constant mass has been reached when there is less than a 0.1 percent change in mass over a monitored drying time. For an oven (110 ± 5° C (230 ± 9° F)), an additional 30 minutes of drying. For an uncontrolled heating source such as hot plates (an additional 20 minutes of drying) or microwaves (an additional 10 minutes of drying).

4 Apparatus:

4.1 *Balance* - The scale or balance for the coarse 4.75 mm (plus 4 mesh) material shall have a sensitivity of 0.01 pounds or 0.01 kilograms. The scale or balance for the fine 4.75 mm (minus 4 mesh) material shall have a sensitivity of 0.1 gram.

4.2 *Sieves* - The sieve cloth shall be mounted on substantial frames constructed in a manner that will prevent loss of material during sieving. Suitable sieve sizes shall be selected to furnish the information required by the specifications covering the material to be tested. The sieves shall conform to the requirements of MT 405, Wire Cloth Sieves for Testing Purposes.

4.2.1 *Sieves*--A nest of two sieves, the lower being a 75-µm (No. 200) sieve and the upper being a sieve with openings in the range of 2.36 mm (No. 8) to 1.18 mm (No. 16), both conforming to the requirement of MT 405.

4.3 *Container* - A container sufficient in size to contain the sample covered with water and to permit vigorous agitation without inadvertent loss of any part of the sample or water.

4.4 Heat Source – A heat source capable of drying samples in accordance with Section 5.

4.5 *Mechanical Sieve Shaker – A mechanical sieving device shall create motion of the sieves to cause the particles to bounce, tumble, or otherwise turn so as to present different orientations to the sieving surface. The sieving action shall be such that the requirement for sieving thoroughness as described in Section 7.3 is met within a reasonable amount of time.*

5 Preparation of Samples:

5.1 Samples for sieve analysis shall be prepared in accordance with MT 607, Reducing Field Samples of Aggregates to Testing Size. The samples shall be the mass desired when dry. The selection of samples of an exact predetermined mass shall not be permitted.

5.2 Dry the sample to a constant mass. For control purposes, particularly where rapid results are desired, it is generally not necessary to dry coarse aggregate to a constant mass for the sieve analysis test. The results are insignificantly affected by the moisture content unless the nominal maximum size is smaller than 12.5 mm (½ in.), or the coarse aggregate contains appreciable material finer than 4.75 mm (No. 4); or the coarse aggregate is highly absorptive (a lightweight aggregate, for example). Samples may be dried at higher temperatures associated with the use of hot plates or other uncontrolled heat sources without affecting results, provided steam escapes without generating pressures sufficient to fracture the particles, and temperatures are not so great as to cause chemical breakdown of the aggregate.

Note 1 - Samples taken for Liquid Limit, Plastic Limit, and Plasticity Index shall be air dried or dried at a temperature no greater than 140°F or 60°C.

Note 2 – Air drying is an acceptable method.

5.3 Representative samples will be graded to determine the percentage of fine material adhering to the coarser fractions.

5.4 *Fine Aggregate* - The test sample of fine aggregate shall weigh, after drying, approximately the following amount:

Aggregate with at least 95% passing a 2.36 mm (No. 8) sieve . . . 100g
Aggregate with at least 85% passing a 4.75 mm (No. 4) sieve
and more than 5% retained on a 2.36 mm (No. 8) sieve 500g

5.5 *Coarse Aggregate* - The mass of the test sample of coarse aggregate shall conform with the following:

Specified 100% Passing Sieve Size		Min. Field Test Sample Size*	
mm	(in)	Kg	(lb)
*9.5	(3/8)	6.8	(15)
*12.5	(1/2)	6.8	(15)
*19.0	(3/4)	9.1	(20)
*25.0	(1)	11.3	(25)
*37.5	(1 ½)	15	(33)
50	(2)	20	(44)
63	(2 ½)	35	(77)

Note 3 - For cover material, concrete aggregate, and samples that require a wear, cleanliness value test, the sample size sent to Helena must be doubled.

5.6 *Coarse and Fine Aggregate Mixtures* - The mass of the test sample of coarse and fine aggregate mixtures shall be the same as for coarse aggregate.

6 Procedure for Calculating Clinging Fines:

6.1 Follow the procedure in Section 5 for the original test. Save the plus 4.75 mm (4 mesh) material.

6.2 Wash the plus 4.75 mm (4 mesh) material over a protected 75 μm (200 mesh) screen. In most cases it is not necessary to rewash the minus 4.75 mm (4 mesh) material. Dry and re-screen over the original sized screens. Use the original mass of sample taken for the calculation of the plus 4.75 mm (4 mesh) percentages.

6 Procedure for Calculating Clinging Fines: (continued)

6.3 Obtain the difference between the original plus 4.75 mm (4 mesh) material and the washed plus 4.75 mm (4) material. Record for use in calculations of the minus 4.75 mm (4 mesh) material. To convert from the pounds of minus 4 mesh material to grams, multiply by 453.6.

Example: (0.39 pounds) X (453.6) = 176.9 grams.

Use the percentage difference passing the 4.75 mm (4 mesh) divided by the before wash weight to get the reciprocal for multiplication.

Example: (1.55%)/176.9 g) = 0.00876

6.4 The total percent clinging fines is the difference in percent of the plus 4.75 mm (4 mesh) screen sizes.

Example: 55.61(dry) - 54.06(washed) = 1.55% (report as 1.6%)

7 Procedure for Aggregate without Clinging Fines:

7.1 The total sample as prepared in Section 5 shall be separated into a series of sizes. To determine compliance with the specifications for the material under test, avoid overloading the screens.

7.2 *Coarse Aggregate: Plus 4.75 mm (4 Mesh) Material* - The individual mass of the plus 4.75 mm (4 mesh) portion of the sample, retained on each screen, shall be determined and recorded to the nearest 0.01 of a pound or 0.01 kilogram.

7.2.1 The individual portions shall be saved until the entire plus 4.75 mm (4 mesh) portion of the sample has been screened, weighed and the weights recorded, before any of the material is discarded.

7.2.2 The total amount of material finer than the plus 4.75 mm (4 mesh) sieve may be determined by subtracting the total mass of material retained on the plus 4.75 mm (4 mesh) sieve from the total mass of the initial dry sample being tested.

7.3 *Fine Aggregate: Minus 4.75 mm (4 Mesh) Material* - At the completion of the sieving as described in Section 7.2, the entire minus 4.75 mm (4 mesh) portions shall be thoroughly mixed and reduced to a minimum of 500 grams.

7.3.1 After drying the sample to a constant mass and weighing, place the test sample in the container and add sufficient water to cover it. A detergent, dispersing agent, or other wetting solution may be added to the water to assure a thorough separation of the material finer than the 75 µm (No. 200) sieve from the coarser particles (Note 4). Agitate the sample with sufficient vigor to result in complete separation of all particles finer than the 75 µm (No. 200) sieve from the coarser particles, and to bring the fine material into suspension. Immediately pour the wash water containing the suspended and dissolved solids over the nested sieves, arranged with the coarser sieve on top. Take care to avoid, as much as feasible, the decantation of coarser particles of the sample.

Note 4 – There should be enough wetting agent to produce a small amount of suds when the sample is agitated. The quantity will depend on the hardness of the water and the quality of the detergent. Excessive suds may overflow the sieves and carry some material with them.

7.3.2 Add a second change of water (without wetting agent) to the sample in the container, agitate, and decant as before. Repeat the operation until the wash water is clear.

Note 5 – If mechanical washing equipment is used, the charging of water, agitating, and decanting may be a continuous operation.

7 Procedure for Aggregate without Clinging Fines: (continued)

Note 6 – A spray nozzle or a piece of rubber tubing attached to a water faucet may be used to rinse any of the material that may have fallen into the sieves. The velocity of the water, which may be increased by pinching the tubing, should not be sufficient to cause any splashing of the sample over the sides of the sieves.

7.3.3 Return all material retained on the nested sieves by flushing to the washed sample. Dry the washed aggregate to a constant mass.

7.3.4 Following the washing of the sample and flushing any materials retained on the 75 *µ*m (No. 200) sieve back into the container, no water should be decanted from the container except through the 75 *µm* sieve, to avoid loss of material. Excess water from flushing should be evaporated from the sample in the drying process.

7.3.5 The individual weights of each size of the minus 4.75 mm (4 mesh) portion retained on each sieve shall be determined and recorded to the nearest 0.1 gram.

7.3.6 The individual portions shall be saved until the entire minus 4.75 mm (4 mesh) portion of the sample that was washed has been screened, weighed, and the weights recorded, before any of the material is discarded.

8 Sieving Procedure:

8.1 Nest the sieves in order of decreasing size of opening from top to bottom and place the sample, or portion of the sample if it is to be sieved in more than one increment, on the top sieve. Agitate the sieves by hand or by mechanical apparatus for a sufficient period, established by trial or checked by measurement on the actual test sample, to meet the criterion for adequacy of sieving described in Section 8.3.

8.2 Limit the quantity of material on a given sieve so that all particles have an opportunity to reach sieve openings a number of times during the sieving operation. Table 1 shows the maximum allowable quantity of material that can be retained on each individual sieve at the completion of the sieving operation. In no case shall the quantity retained be so great as to cause permanent deformation of the sieve cloth.

8.2.1 Prevent an overload of material on an individual sieve by splitting the sample into two or more portions, sieving each portion individually. Combine the masses of the several portions retained on a specific sieve before calculating the percentage of the sample on the sieve.

8.3 Continue sieving for a sufficient period and in such manner that, after completion, not more than 0.5 percent by mass of the total sample passes any sieve during one minute of continuous hand sieving. Perform as follows: Hold the individual sieve, provided with a snug-fitting pan and cover, in a slightly inclined position in one hand. Strike the side of sieve sharply and with an upward motion against the heel of the other hand at the rate of about 150 times per minute, turn the sieve about one sixth of a revolution at intervals of about 25 strokes. In determining sufficiency of sieving for sizes larger than the 4.75 mm (No. 4) sieve, limit the material on the sieve to a single layer of particles. If the size of the mounted testing sieves makes the described sieving motion impractical, use 203 mm (8 in.) diameter sieves to verify the sufficiency of sieving.

8.4 Unless a mechanical shaker is used, hand sieve particles obtained on the 75 mm (3 in) by determining the smallest sieve opening through which each particle will pass by rotating the particles, if necessary, in order to determine whether they will pass through the particular opening, however, do not force the particles to pass through an opening.

8 Sieving Procedure: (continued)

8.5 The efficiency of the mechanical shaker shall be checked periodically by comparing results with the hand method. This practice will help determine the length of time required for the mechanical bshaker to adequately separate material sizes.

Table 1 – Maximum Allowable Quantity of Material Retained on a Sieve, Kg (lb)

	Nominal Dimensions of Sieve				
Sieve Opening Size	8 in dia	10 in dia	12 in dia	14 x 14 in dia	16 x 24 in dia
125 mm (5 in)	a	a	a	a	67.4 (148.6)
100 mm (4 in)	a	a	a	30.6 (67.5)	53.9 (118.8)
90 mm (31/2 in)	a	a	15.1 (33.3)	27.6 (60.8)	48.5 (106.9)
75 mm (3 in)	a	8.6 (19.0)	12.6 (27.8)	23.0 (50.7)	40.5 (89.3)
63 mm (21/2 in)	a	7.2 (15.9)	10.6 (23.4)	19.3 (42.6)	34.0 (75.0)
50 mm (2 in)	3.6 (7.9)	5.7 (12.6)	8.4 (18.5)	15.3 (33.7)	27.0 (59.5)
37.5 mm (11/2 in)	2.7 (6.0)	4.3 (9.5)	6.3 (13.9)	11.5 (25.4)	20.2 (44.5)
25.0 mm (1 in)	1.8 (4.0)	2.9 (6.4)	4.2 (9.5)	7.7 (17.0)	13.5 (29.8)
19.0 mm (3/4 in)	1.4 (3.1)	2.2 (4.9)	3.2 (7.1)	5.8 (12.8)	10.2 (22.5)
12.5 mm (1/2 in)	0.89 (2.0)	1.4 (3.1)	2.1 (4.6)	3.8 (8.4)	6.7 (14.8)
9.5 mm (3/8 in)	0.67 (1.5)	1.1 (2.4)	1.6 (3.5)	2.9 (6.4)	5.1 (11.2)
4.75 mm (No 4)	0.33 (0.7)	0.54 (1.2)	0.80 (1.8)	1.5 (3.3)	2.6 (5.7)

a Sieves as indicated have less than 5 full openings and should not be used for sieve testing.

9 Calculations:

9.1 Calculate the cumulative weight passing and the percentages to the nearest 0.01 percent on the basis of the total mass of the initial dry sample.

9.2 *Coarse Aggregate: Plus 4.75 mm (4 Mesh) Material* – For each of the various sieves, the individual cumulative weights must be converted to total weight passing. The total weight passing is divided by the total weight of the initial dry sample multiplied by 100, which will result in the percent passing. (See the example on the following worksheets).

9.3 *Fine Aggregate: Minus 4.75 mm (4 Mesh) Material* - Calculating the percentages of the minus 4.75 mm (4 mesh) portion of the sample is simplified by using a reciprocal. The reciprocal is determined by dividing the percent of material passing the minus 4.75 mm (4 mesh) sieve by the weight of the minus 4.75 mm (4 mesh) sample before washing. This reciprocal, when multiplied by the various total weights passing, results in the percent passing, in relation to the total sample. (See the example on the following worksheets).

10 Report:

10.1 Unless otherwise required, the results of the sieve analysis shall be reported as the total percentages passing each sieve size and reported to the nearest whole number for all material coarser than the 75 μm (200 mesh) and reported to one tenth of one percent for the 75 μm (200 mesh). Percentages shall be calculated on the basis of the total mass of the initial dry sample, including any material finer than the 75 μm (200 mesh) sieve.

11 Hot Plant Mix Aggregates:

11.1 Plant mix aggregates shall be governed by the provisions of MT 202, except that sampling will be in accordance with MT 201, which provides that the samples be obtained by means of an approved sampling device.

Form No. 123-E
(Rev. 11/8/11)

Montana Department of Transportation

Materials Lab. No. _____ UPN _____ Contract No. _____
Dist. Lab. No. _____ Sample _____ Hole/IA# _____ Contract Item # _____
Project No. _____
Project Name _____
Date Sampled _____ Date Rec. Helena _____ Kind of Deposit _____
Sampled By _____ Witnessed by _____ Address _____
Submitted By _____ Title _____ Date _____
Quantity _____ Area by Stationing _____
Area is in _____ Sec. _____ T- _____ R- _____
Lab. No. _____ County _____
Supplier _____ Address _____
Sta. and/or Tons Production Sample _____ Lift No. _____
Examined for _____

Constant Mass (500 gram sample): Initial Wt. 524.3 grams Check Wt. 518.6 grams Second Check Wt. 518.6 grams

Wt. of Sample Taken.	40.83	lbs.	100.00	%
Wt. Retained 4-Mesh	26.92	lbs.	65.93	%
Wt. Passing 4-Mesh.	13.91	lbs.	34.07	%
Before Wash 518.6	After 425.3	LBW 93.3		

LL	PL	PI
Wear %	Fld.Agg.Chart No.	
Fracture %	Sp.Gr. (F)	(C)
Max. Dens.	Soil Class	
Opt. Moist	Wt./Ft.	
Dust Ratio	Sand Equiv.	

Wt. Ret.		Wt Pass	Pct	Spec
	"			
	3"			
	2½"			
	2"			
	1½"		100	
3.63	1"	37.2	91	
9.42	3/4"	31.41	77	
16.18	1/2"	24.65	60	
20.04	3/8"	20.79	51	
26.92	4M	13.91	34	
146.5	8M/10M	372.1	24	
279.6	40M	239.0	16	
375.2	80M	143.4	9	
423.9	200M	94.7	6.2	
425.1	Pan Wt.			
0.0657	Reciprocal	0.04% is less than 0.3%		

Volume Swell

Age	Treat	%Swell	Spec.	Specimen Condition

"R-Value"

Extrude Pressure	
Expansion Pressure	
Equilibrium	

Micro-Deval / Sodium Sulfate

Micro-Deval Loss	%	Sodium Sulfate Loss	%

Adhesion

% Adhesion	Bitumen	Adhesive Agent

Checked & Approved	Date	Name

Distribution List

☐	District Administrator
☐	District Lab Supervisor
☐	Area Lab Supervisor
☐	Engr Project Manager
☐	Maintenance Superintendent
☐	Construction
☐	Preconstruction
☐	County File
☐	Surfacing Design
☐	Helena
☐	Master Lab File
☐	

Independent Assurance Comparison

Sieve	Field	Dist	Helena

REMARKS: **See the following page for a written explanation of calculations used for this form (F123-E).**

Calculations used on form F123-E

PLUS 4.75 mm (+4 MESH) MATERIAL - The total weight passing each sieve divided by the total weight of the initial sample taken (40.83 lbs.), multiplied by 100, results in the percent passing. EXAMPLE: 13.91 ÷ 40.83 = 0.34 X 100 = 34% The value is rounded and recorded to the nearest whole number.

MINUS 4.75 mm (-4 MESH) MATERIAL – (By Reciprocal Method). This sample is dried to a constant mass before and after washing. A reciprocal is determined by dividing the percent of material passing the 4 mesh (34.07%) by the mass of the minus 4 mesh sample (518.6 grams). This reciprocal (0.0657) is multiplied by the cumulative weight passing for each sieve size.
EXAMPLE: 518.6 - 146.5= 372.1; 372.1 x 0.0657 = 24.45% and is rounded down to and is recorded as 24%. The rounding is either up or down to the nearest whole number with the exception of the 200 mesh which is carried to one tenth of a percentage (6.2%). The result represents the percent passing in relation to the total sample.

The adjusted cumulative mass retained in the pan plus the Loss By Wash (LBW) mass should be within 0.3% of original dry mass of the total sample. EXAMPLE: 425.1+93.3=518.4, 518.6-518.4=0.2, (0.2/518.6)x100=0.04%

MONTANA DEPARTMENT OF TRANSPORTATION

Field Aggregate Chart - Sample for Clinging Fines

Project No.: _____ Contract No.: _____ Project Name: _____ Mat'ls. Suprv.: _____
Contract Item # _____ UPN : _____ Material # : _____
County: _____ Laboratory Pit No.: _____ Test For: _____
Pit Location: _____ Section: _____ Township: _____ Range: _____

Test No. _____ Lot No. _____ Date _____ Sampled By _____ Tested By _____
Stationing _____ Lift _____ Lane _____

Constant Mass Wt. 1 ____ Wt. 2 ____ Wt. 3 ____
Wt. of Sample Taken 25.23 Lbs. 100%
Wt. Retained 4-Mesh 11.59 Lbs. 45.94%
Wt. Passing 4-Mesh 13.64 Lbs. 54.06%
Before Wash 520.5 After Wash 448.0 LBW 72.5

Constant Mass Wt. 1 ____ Wt. 2 ____ Wt. 3 ____
Wt. of Orig. Sample Taken 25.23 Lbs.
Difference in Weight Passing 4 -Mesh 0.39 Lbs 1.55%
Before Wash 176.9 After Wash ____ LBW ____

Cum. Wt. Ret.	Size	Tot. Wt. Pass	Percent	Spec.	Cum. Wt. Ret.	Size	Tot. Wt. Pass	Percent	Spec.	Actual Grading % Passing	Size	% Clinging Fines
	4½"					4½"					4½"	
	4"					4"					4"	
	3½"					3½"					3½"	
	3"					3"					3"	
	2½"					2½"					2½"	
	2"					2"					2"	
	1½"					1½"					1½"	
	1¼"					1¼"					1¼"	
	1"					1"					1"	
0	⅝ ¾"	25.23	100		0	⅝ ¾"	25.23	100		100	⅝ ¾"	0
1.29 lbs	½"	23.94	94.89		1.22 lbs	½"	24.01	95.16		95.16	½"	0.27
4.69 lbs	⅜"	20.54	81.41		4.43 lbs	⅜"	20.80	82.44		82.44	⅜"	1.03
* 11.59 lbs	4 M	13.64	54.06		* 11.20 lbs	4 M	14.03	55.61		55.61	4 M	1.55
219.7 g	8/10 M	300.8	31.25		19.9 g	8/10 M	157.0	1.38		32.63	8/10 M	
375.8 g	40 M	144.7	15.03		48.4 g	40 M	128.5	1.13		16.16	40 M	
420.5 g	80 M	100.0	10.39		90.0 g	80 M	86.9	0.76		11.15	80 M	
447.9 g	200 M	72.6	7.54		174.9 g	200 M	2.0	0.02		7.56	200 M	
	Pan/Total					Pan/Total					Pan/Total	
	Reciprocal	0.1039				Reciprocal	0.0088				Reciprocal	

* ±4 Mesh Sample Split and Sieved

NOTE: Report the % Clinging Fines to the tenth, 1.6%

Dust Ratio _____ %
Moisture _____ %
Fracture _____ %
Liquid Limit _____
Plasticity Index _____

Dust Ratio _____ %
Moisture _____ %
Fracture _____ %
Liquid Limit _____
Plasticity Index _____

Dust Ratio _____ %
Moisture _____ %
Fracture _____ %
Liquid Limit _____
Plasticity Index _____

Checked by _____ Date _____ Entered by _____ Date _____

REMARKS: See the following page for a written explanation of calculations used for this form (F104C-E).

Calculations used on form F104C-E

PLUS 4.75 mm (+4 MESH) MATERIAL - The total weight passing each sieve divided by the total weight of the initial sample taken (25.23 lbs.), multiplied by 100, results in the percent passing. EXAMPLE: 13.64 ÷ 25.23 = 0.5406 X 100 = 54.06%

MINUS 4.75 mm (-4 MESH) MATERIAL – (By Reciprocal Method). This sample is dried to a constant mass before and after washing. A reciprocal is determined by dividing the percent of material passing the 4 mesh (54.06%) by the mass of the minus 4 mesh sample (520.5 grams). This reciprocal (0.1039) is multiplied by the cumulative weight passing for each sieve size. EXAMPLE: 520.5 – 219.7= 300.8; 300.8 x 0.1039 = 31.25% and is rounded down to and is recorded as 31%. The rounding is either up or down to the nearest whole number with the exception of the 200 mesh which is carried to one tenth of a percentage (7.5%). The result represents the percent passing in relation to the total sample.

For the Actual Grading % Passing of the +4 MESH, use the second gradation.

To calculate the % of Clinging Fines on each sieve (change in percentage), take the percent from the +4 MESH of the second gradation and subtract the percent from the +4 MESH of the first gradation. EXAMPLE 95.16 – 94.89 = 0.27%

In order to calculate the Actual Grading % Passing the MINUS 4.75 mm (-4 MESH), the percent passing in the second gradation is added to the percent passing the first gradation. EXAMPLE: 31.25 + 1.38 = 32.63

The reciprocal for the second sieve analysis is calculated by taking the % of clinging fines on the +4 MESH and dividing it by the before wash weight of the second gradation. EXAMPLE: 1.55 ÷ 176.9 = 0.0088

The adjusted cumulative mass retained in the pan plus the Loss By Wash (LBW) mass should be within 0.3% of original dry mass of the total sample. EXAMPLE: 447.9+72.5=520.4, 520.5-520.4=0.1, (0.1/520.5)x100=0.02%

METHODS OF SAMPLING AND TESTING
MT 203-04
TEST FOR UNIT WEIGHT OF AGGREGATE
(*Modified AASHTO T 19*)

1 Scope

1.1 This method covers the determination of unit weight in a compacted or loose condition, and calculated voids in fine, coarse, or mixed aggregates based on the same determination. The method is applicable to aggregates not exceeding 6 in. [150 mm] in nominal maximum size.

Note 1 - Unit weight is the traditional terminology used to describe the property determined by this test method. Some believe the proper term is unit mass or density or bulk density, but consensus on this alternate terminology has not been obtained.

1.2 The values stated in either inch-pound units or acceptable metric units are to be regarded separately as standard, as appropriate for a specification with which this test method is used. An exception is with regard to sieve sizes and nominal size of aggregate, in which the metric values are the standard as stated in AASHTO M 92. Within the text, metric units are shown in brackets. The values stated in each system may not be exact equivalents; therefore, each system must be used independently of the other, without combining values in any way.

2 Referenced Documents

AASHTO

M 92 Wire Cloth and Sieves for Testing Purposes
T 2 Sampling Aggregates
T 19 Bulk Density (“Unit Weight”) and Voids in Aggregate
T 84 Specific Gravity and Absorption of Fine Aggregate
T 85 Specific Gravity and Absorption of Coarse Aggregate
T 121 Density (Unit Weight), Yield, and Air Content (Gravimetric) of Concrete

MT Materials Manual

MT 204 Absorption of Fine Aggregate
MT 205 Specific Gravity and Absorption of Coarse Aggregate
MT 405 Specification for Wire-Cloth Sieves for Testing Purposes
MT 607 Procedure for Reducing Field Samples of Aggregate to Testing Size

3 Apparatus

3.1 *Balance* - A balance or scale accurate within 0.3 percent of the test load at any point within the range of use. The range of use shall be considered to extend from the weight of the measure empty to the weight of the measure plus its contents at 100 pounds per cubic foot (1600 kilograms per cubic meter).

3.2 *Tamping Rod* - A round, straight steel rod, 3/8 in. (16 mm) in diameter and approximately 24 in. (600 mm) in length, having one end rounded to a hemispherical tip of the same diameter as the rod.

3.3 *Measure* - A cylindrical metal measure preferably provided with handles. It shall be watertight, with the top and bottom true and even, and sufficiently rigid to retain its form under rough usage. The measure should have a height approximately equal to the diameter, but in no case shall the height be less than 80% nor more than 150% of the diameter. The capacity of the measure shall conform to the limits in Table 1 for the aggregate size to be tested. The thickness of metal in the measure shall be as described in Table 2. The top rim shall be smooth and plane within 0.01 in. [0.25 mm] and shall be parallel to the bottom within 0.5° (Note 2).

TABLE 1 Capacity of Measures			
Nominal Maximal Size of Aggregate		**Capacity of Measure[A]**	
in.	**mm**	**ft³**	**L(m³)**
1/2	12.5	1/10	2.8 (0.0028)
1	25.0	1/3	9.3 (0.0093)
1½	37.5	1/2	14 (0.014)
3	75	1	28 (0.028)
4½	112	2½	70 (0.070)
6	150	3½	100 (0.100)

[A]The indicated size of measure shall be used to test aggregates of a nominal maximum size equal to or smaller than that listed. The actual volume of the measure shall be at least 95% of the nominal volume listed.

TABLE 2 Requirements of Measures			
Capacity of Measure	**Thickness of Metal, min**		
	Bottom	**Upper 1½ in. or 38 mm of Wall[A]**	**Remainder of Wall**
Less than 0.4 ft³	0.20 in.	0.10 in.	0.10 in.
0.4 ft³ to 1.5 ft³, incl	0.20 in.	0.20 in.	0.12 in.
Over 1.5 to 2.8 ft³, incl	0.40 in.	0.25 in.	0.15 in.
Over 2.8 to 4.0 ft³, incl	0.50 in.	0.30 in.	0.20 in.
Less than 11 L	5.0 mm	2.5 mm	2.5 mm
11 to 42 L, incl	5.0 mm	5.0 mm	3.0 mm
Over 42 to 80 L, incl	10.0 mm	6.4 mm	3.8 mm
Over 80 to 133 L, incl	13.0 mm	7.6 mm	5.0 mm

[A]The added thickness in the upper portion of the wall may be obtained by placing a reinforcing band around the top of the measure.

Note 2 – The top rim is satisfactorily plane if a 0.01 in. [0.25 mm] feeler gage cannot be inserted between the rim and a piece of ¼ in. (6 mm) or thicker plate glass laid over the measure. The top and bottom are satisfactorily parallel if the slope between pieces of plate glass in contact with the top and bottom does not exceed 0.87 percent in any direction.

3.3.1 If the measure may also be used for testing for unit weight of concrete according to T 121, the measure should be made of steel or other suitable metal not readily subject to attack by cement paste.

Note 3 – Reactive materials such as aluminum alloys may be used where, as a consequence of an initial reaction, a surface film is formed which protects the metal against further corrosion. Measures larger than nominal 1-ft³ (28-L) capacity should be made of steel for rigidity, or the minimum thicknesses of metal listed in Table 2 should be suitably increased.

3.4 *Shovel or Scoop*--A shovel or scoop of convenient size for filling the measure with aggregate.

3.5 *Calibration Equipment*--A piece of plate glass, preferably at least ¼ in. [6 mm] thick and at least 1 in. [25 mm] larger than the diameter of the measure to be calibrated. A supply of water pump or chassis grease that can be placed on the rim of the container to prevent leakage.

4 Sampling

4.1 Sampling should generally be accomplished in accordance with MT 607, Procedure for Reducing Field Samples of Aggregate to Testing Size.

5 Sample

5.1 The size of sample shall be approximately 125 to 200% of the quantity required to fill the measure, and shall be handled in a manner to avoid segregation. Dry the sample of aggregate to essentially constant mass, preferably in an oven at 230 ± 9°F (110 ± 5°C).

6 Calibration of Measure

6.1 Fill the measure with water at room temperature and cover with a piece of plate glass in such a way as to eliminate bubbles and excess water.

6.2 Determine the mass of water in the measure using the balance described in 5.1.

6.3 Measure the temperature of water to determine its density from Table 3, interpolating if necessary.

6.4 Calculate the volume, V, of the measure by dividing the mass of water required to fill the measure by its density. Alternately, calculate the factor for the measure (1/volume) by dividing the density of the water by the mass required to fill the measure.

TABLE 3. Density of Water

Temperature			
°F	**°C**	**lb/ft³**	**kg/m³**
60	15.6	62.366	999.01
65	18.3	62.336	998.54
70	21.1	62.301	997.97
(73.4)	(23.0)	(62.274)	(997.54)
75	23.9	62.261	997.32
80	26.7	62.216	996.59
85	29.4	62.166	995.83

Note 4 – For the calculation of unit weight, the volume of the measure in acceptable metric units should be expressed in cubic meters, or the factor as 1/m³. However, for convenience the size of the measure may be expressed in liters (equal to m³/1,000).

6.5 Measures shall be recalibrated at least once a year or whenever there is reason to question the accuracy of the calibration.

7 Selection of Procedure

7.1 The shoveling procedure for loose unit weight shall be used only when specifically stipulated. Otherwise, the compact unit weight shall be determined by the rodding procedure for aggregates having a nominal maximum size of 1½ in. [37.5 mm] or less, or by the jigging procedure for aggregates having a nominal maximum size greater than 1½ in. [37.5 mm] and not exceeding 6 in. (150 mm).

8 Rodding Procedure

8.1 Fill the measure one-third full and level the surface with the fingers. Rod the layer of aggregate with 25 strokes of the tamping rod evenly distributed over the surface. Fill the measure two-thirds full and again level and rod as above. Finally, fill the measure to overflowing and rod again in the manner previously mentioned. Level the surface of the aggregate with the fingers or a straightedge in such a way that any slight projections of the larger pieces of the coarse aggregate approximately balance the larger voids in the surface below the top of the measure.

8.2 In rodding the first layer, do not allow the rod to strike the bottom of the measure forcibly. In rodding the second and third layers, use vigorous effort, but not more force than to cause the tamping rod to penetrate to the previous layer of aggregate.

Note 5 – In rodding the larger sizes of coarse aggregate, it may not be possible to penetrate the layer being consolidated, especially with angular aggregates. The intent of the procedure will be accomplished if vigorous effort is used.

8.3 Determine the mass of the measure plus contents, and the mass of the measure alone and record the values to the nearest 0.1 lb (0.05 kg).

9 Jigging Procedure

9.1 Fill the measure in three approximately equal layers as described in 10.1 compacting each layer by placing the measure on a firm base, such as a cement-concrete floor, raising the opposite sides alternately about 2 in. (50 mm), and allowing the measure to drop in such a manner as to hit with a sharp, slapping blow. The aggregate particles, by this procedure, will arrange themselves in a densely compacted condition. Compact each layer by dropping the measure 50 times in the manner described, 25 times on each side. Level the surface of the aggregate with the fingers or a straightedge in such a way that any slight projections of the larger pieces of the coarse aggregate approximately balance the larger voids in the surface below the top of the measure.

9.2 Determine the mass of the measure plus contents, and the mass of the measure alone, and record the values to the nearest 0.1 lb (0.05 kg).

10 Shoveling Procedure

10.1 Fill the measure to overflowing by means of a shovel or scoop, discharging the aggregate from a height not to exceed 2 in. (50 mm) above the top of the measure. Exercise care to prevent, so far as possible, segregation of the particle sizes of which the sample is composed. Level the surface of the aggregate with the fingers or a straightedge in such a way that any slight projections of the larger pieces of the coarse aggregate approximately balance the larger voids in the surface below the top of the measure.

10.2 Determine the mass of the measure plus contents, and the mass of the measure alone, and record the values to the nearest 0.1 lb (0.05 kg).

11 Calculations

11.1 *Unit Weight*--Calculate the unit weight for the rodding, jigging, or shoveling procedure as follows:

$$M = (G - T)/V \quad (1)$$

or

$$M = (G - T) \times F \quad (2)$$

where:

M = unit weight of aggregate, lb/ft³ [kg/m³]

G = mass of aggregate plus the measure, lb [kg]

T = mass of the measure, lb [kg]

V = volume of measure, ft³ [m³]

F = factor for measure, ft^{-3} [m^{-3}]

11.1.1 The unit weight determined by this method is for aggregate in an ovendry condition. If the unit weight in terms of saturated-surface-dry (SSD) condition is desired, use the exact procedure in this method, and then determine the SSD unit weight by the following formula:

$$M_{SSD} = M[1 + (A/100)] \quad (3)$$

where:

M_{SSD} = unit weight in SSD condition, lb/ft³ [kg/m³]

A = absorption, %, determined in accordance with AASHTO T84 or T 85.

11.2 *Void Content*--Calculate the void content in the aggregate using the unit weight determined by either the rodding, jigging, or shoveling procedure, as follows:

$$Voids, \% = \frac{100\,[(S \times W) - M]}{S \times W} \quad (4)$$

where:

M = unit weight of aggregate, lb/ft³ [kg/m³]

S = bulk specific gravity (dry basis) as determined in accordance with AASHTO T 84 or T 85.

W = density of water, 62.3 lb/ft³ [998 kg/m³]

12 Report

12.1 Report the results for unit weight to the nearest 1 lb/ft^3 [10 kg/m^3] as follows:

12.1.1 Unit weight by rodding, or

12.1.2 Unit weight by jigging, or

12.1.3 Loose unit weight.

12.2 Report the results for void content to the nearest 1% as follows:

12.2.1 Voids in aggregate compacted by rodding, % or

12.2.2 Voids in aggregate compacted by jigging, %, or

12.2.3 Voids in loose aggregate, %.

13 Reproducibility of Results

13.1 Results by an operator using the sample and procedure check within one percent.

METHODS OF SAMPLING AND TESTING
MT 204-04
METHOD OF TEST FOR SPECIFIC GRAVITY AND ABSORPTION OF FINE AGGREGATE
(Modified AASHTO T 84)

1 Scope:

1.1 This method covers the determination of bulk and apparent specific gravity, 23/23°C 73.4/73.4°F), and absorption of fine aggregate.

1.2 This method determines (after 15 h in water) the bulk specific gravity and the apparent specific gravity as defined in MT-206, the bulk specific gravity on the basis of weight of saturated surface-dry aggregate, and the absorption as defined in MT-206.

1.3 The values stated in acceptable metric unit (SI units and units specifically approved in AASHTO R1 for use with SI units) are to be regarded as the standard.

1.4 This standard may involve hazardous materials, operations, and equipment. This standard does not purport to address all of the safety problems associated with its use. It is the responsibility of whoever uses this standard to consult and establish appropriate safety and health practices and determine the applicability of regulatory limitations prior to use.

2 Referenced Documents:

2.1 ***AASHTO:***

R 1 Metric Practice
T 133 Density of Hydraulic Cement

ASTM Standards:

C 125 Terminology Relating to Concrete and Concrete Aggregates
C 670 Practice for Preparing Precision and Bias Statements for Test Methods for Construction Materials

MT Materials Manual:

MT 201 Sampling Roadway Materials
MT 205 Specific Gravity and Absorption of Coarse Aggregate
MT 206 Definitions of Terms Relating to Density and Specific Gravity of Solids, Liquids, and Gases
MT 607 Reducing Field Samples of Aggregate to Testing Size

3 Apparatus:

3.1 *Balance* - A balance having a capacity of 1 kilogram or more and sensitive to 0.1 gram or less.

3.2 *Pycnometer* - A flask or other suitable container into which the fine aggregate test sample can be readily introduced and in which the volume content can be reproduced with ± 0.1 cm^3. The volume of the container filled to mark shall be at least 50 percent greater than the space required to accommodate the test sample. A volumetric flask of 500 capacity or a fruit jar fitted with a pycnometer top is satisfactory for a 500-g test sample of most fine aggregates. A Le Chatelier flask as described in AASHTO T 133 is satisfactory for an approximately 55-g test sample.

3.3 *Mold* - A metal mold in the form of a frustum of a cone with dimensions as follows: 40 ± 3 mm inside diameter at the top, 90 ± 3 mm inside diameter at the bottom, and 75 ± 3 mm in height, with the metal having a minimum thickness of 0.8 mm.

3 Apparatus: (continued)

3.4 *Tamper* - A metal tamper weighing 340 ± 15 g and having a flat circular tamping face 25 ± 3 mm in diameter.

4 Sampling:

4.1 Sampling shall be accomplished in general accordance with MT-201.

5 Preparation of Test Specimen:

5.1 Obtain approximately 1000 grams of the fine aggregate from the sample using the applicable procedures described in MT 607.

5.1.1 Dry it in a suitable pan or vessel to constant weight at a temperature of 110 ± 5°C (230 ± 9°F). Allow it to cool to comfortable handling temperature, cover with water, either by immersion or by the addition of at least 6 percent moisture to the fine aggregate and permit to stand for 15 to 19 hours.

5.1.2 As an alternative to Section 5.1.1, where the absorption and specific gravity values are to be used in proportioning concrete mixtures with aggregates used in their naturally moist condition, the requirement for initial drying to constant weight may be eliminated and, if the surfaces of the particles have been kept wet, the 15-h soaking may also be eliminated.

Note 1 - Values for absorption and for specific gravity in the saturated surface-dry condition may be significantly higher for aggregate not oven dried before soaking than for the same aggregate treated in accordance with Section 5.1.1.

5.2 Decant excess water with care to avoid loss of fines, spread the sample on a flat nonabsorbent surface exposed to a gently moving current of warm air, and stir frequently to secure homogeneous drying. If desired, mechanical aids such as tumbling or stirring may be employed to assist in achieving the saturated surface-dry condition. Continue this operation until the test specimen approaches a free-flowing condition. Follow the procedure in Section 5.2.1 to determine whether or not surface moisture is present on the constituent fine aggregate particles. It is intended that the first trial of the cone test will be made with some surface water in the specimen. Continue drying with constant stirring and test at frequent intervals until the test indicates that the specimen has reached a surface-dry condition. If the first trial of the surface moisture test indicates that moisture is not present on the surface, it has been dried past the saturated surface-dry condition. In this case, thoroughly mix a few milliliters of water with the fine aggregate and permit the specimen to stand in a covered container for 30 min. Then resume the process of drying and testing at frequent intervals for the onset of the surface-dry condition.

5.2.1 *Cone Test for Surface Moisture* - Hold the mold firmly on a smooth nonabsorbent surface with the large diameter down. Place a portion of the partially dried fine aggregate loosely in the mold by filling it to overflowing and heaping additional material above the top of the mold by holding it with the cupped fingers of the hand holding the mold. Lightly tamp the fine aggregate into the mold with 25 light drops of the tamper. Each drop should start about 5 mm (0.2 in.) above the top surface of the fine aggregate. Permit the tamper to fall freely under gravitational attraction on each drop. Adjust the starting height to the new surface elevation after each drop and distribute the drops over the surface. Remove loose sand from the base and lift the mold vertically. If surface moisture is still present, the fine aggregate will retain the molded shape. When the fine aggregate slumps slightly, it indicates that it has reached a surface-dry condition. Some angular fine aggregate or material with a high proportion of fines may not slump in the cone test upon reaching a surface-dry condition. This may be the case if fines become airborne upon dropping a handful of the sand from the cone test 100 to 150 mm into a surface. For these materials, the saturated surface-dry condition should be considered as the point that one side of the fine aggregate slumps slightly upon removing the mold.

5 Preparation of Test Specimen: (continued)

Note 2 - The following criteria have also been used on materials that do not readily slump:

(1) Provisional Cone Test - Fill the cone mold as described in Section 5.2.1 except only use 10 drops of the tamper. Add more fine aggregate and use 10 drops of the tamper again. Then add material two more times using 3 and 2 drops of the tamper, respectively. Level off the material even with the top of the mold, remove loose material from the base; and lift the mold vertically.

(2) Provisional Surface Test - If airborne fines are noted when the fine aggregate is such that it will not slump when it is at a moisture condition, add more moisture to the sand, and at the onset of the surface-dry condition, with the hand lightly pat approximately 100 g of the material on a flat, dry, clean, dark or dull nonabsorbent surface such as a sheet of rubber, a worn oxidized, galvanized, or steel surface, or a black-painted metal surface. After 1 to 3 s, remove the fine aggregate. If noticeable moisture shows on the test surface for more than 1 to 2 s, then surface moisture is considered to be present on the fine aggregate.

(3) Calorimetric procedures described by Kandhal and Lee, Highway Research Record No. 307, p. 44.

(4) For reaching the saturated surface-dry condition on a single size material that slumps when wet, hard-finish paper towels can be used to surface dry the material until the point is just reached where the paper towel does not appear to be picking up moisture from the surfaces of the fine aggregate particles.

6 Procedure:

6.1 Make and record all weight determinations to 0.1 g.

6.2 Partially fill the pycnometer with water. Immediately introduce into the pycnometer 500 ± 10 g of saturated surface-dry fine aggregate prepared as described in Section 6, and fill with additional water to approximately 90 percent of capacity. Roll, invert, and agitate the pycnometer to eliminate all air bubbles. Adjust its temperature to 23 ± 1.7°C (73.4 ± 3°F), if necessary by immersion in circulating water, and bring the water level in the pycnometer to its calibrated capacity. Determine total weight of the pycnometer, specimen, and water.

Note 3 - It normally takes about 15 to 20 minutes to eliminate air bubbles. Dipping the tip of a paper towel into the pycnometer has been found to be useful in dispersing the foam that sometimes builds up when eliminating the air bubbles.

6.2.1 *Alternative to Weighing in Section 6.2* - The quantity of added water necessary to fill the pycnometer at the required temperature may be determined volumetrically using a buret accurate to 0.15 mL. Compute the total weight of the pycnometer, specimen, and water as follows:

$$C = 0.9975V_a + S + W$$

where:

C = weight of pycnometer with specimen and water to calibration mark, g,

V_a = volume of water added to pycnometer, mL

S = weight of saturated surface-dry specimen, g, and

W = weight of the pycnometer empty, g.

6 Procedure: (continued)

6.2.2 *Alternative to the Procedure in Section 6.2* - Use a Le Chatelier flask initially filled with water to a point on the stem between the 0 and the 1 -mL mark. Record this initial reading with the flask and contents within the temperature range of 23 ± 1.7°C (73.4 ± 3°F). Add 55 ± 5 g of fine aggregate in the saturated surface-dry condition (or other weight as necessary to result in raising the water level to some point on the upper series of graduation). After all fine aggregate has been introduced, place the stopper in the flask and roll the flask in an inclined position, or gently whirl it in a horizontal circle so as to dislodge all entrapped air, continuing until no further bubbles rise to the surface. Take a final reading with the flask and contents within 1°C (1.8°F) of the original temperature.

6.3 Remove the fine aggregate from the pycnometer, dry to constant weight at a temperature of 110 ± 5°C (230 ± 9°F), cool in air at room temperature for 1 ± ½ h, and weigh.

6.3.1 If the Le Chatelier flask method is used, a separate sample portion is needed for the determination of absorption. Weigh a separate 500 ± 10 g portion of the saturated surface-dry fine aggregate, dry to constant weight, and reweigh.

Note 4 - In lieu of weighing the sample that has been removed from the pycnometer, a second 500 ± 10 g portion of the saturated surface dry sample may be used to determine the dry weight.

6.4 Determine the weight of the pycnometer filled to its calibration capacity with water at 23 ± 1.7°C (73.4 ± 3°F).

6.4.1 *Alternative to Weighing in Section 6.4* - The quantity of water necessary to fill the empty pycnometer at the required temperature may be determined volumetrically using a buret accurate to 0.15 mL. Calculate the weight of the pycnometer filled with water as follows:

$$B = 0.9975\ V + W$$

where:

B = weight of flask filled with water, g,

V = volume of flask, mL, and

W = weight of the flask empty, g.

7 Bulk Specific Gravity:

7.1 Calculate the bulk specific gravity, 23/23°C (73.4/73.4°F), as defined in MT-206 as follows:

$$\text{Bulk sp gr} = A/(B + S - C)$$

where:

A = weight of oven-dry specimen in air, g,

B = weight of pycnometer filled with water, g,

C = weight of pycnometer with specimen and water to calibration mark, g, and

S = weight of saturated surface-dry specimen, g.

7.2 If the Le Chatelier flask method was used, calculate the bulk specific gravity, 23/23°C, as follows:

Bulk sp gr = $\dfrac{S_1(A/S)}{0.9975(R_2 - R_1)}$

where:

R_1 = initial reading of water level in Le Chatelier flask,

R_2 = final reading of water level in Le Chatelier flask, and

S_1 = weight of saturated surface-dry specimen used in Le Chatelier flask, g.

8 Bulk Specific Gravity (Saturated Surface-Dry Basis):

8.1 Calculate the bulk specific gravity, 23/23°C (73.4/73.4°F), on the basis of weight of saturated surface-dry aggregate as follows:

Bulk sp gr (saturated surface-dry basis) = *A/(B+S-C)*

8.2 If the Le Chatelier flask method was used, calculate the bulk specific gravity, 23/23°C, on the basis of saturated surface-dry aggregate as follows:

Bulk sp gr (saturated surface-dry basis) = $\dfrac{S_1}{0.9975(R_2 - R_1)}$

9 Apparent Specific Gravity:

9.1 Calculate the apparent specific gravity, 23/23°C (73.4/73.4°F), as defined in MT-206 as follows:

Apparent sp gr = *A/(B+A-C)*

10 Absorption:

10.1 Calculate the percentage of absorption, as defined in ASTM C 125, as follows:

Absorption, % = [*(S-A)/A*] *x 100*

11 Report:

11.1 Report specific gravity results to the nearest 0.01 and absorption to the nearest 0.1 percent. The Appendix gives mathematical interrelationships among the three types of specific gravities and absorption. These may be useful in checking the consistency of reported data or calculating a value that was not reported by using other reported data.

11.2 If the fine aggregate was tested in a naturally moist condition other than the oven dried and 15-h soaked condition, report the source of the sample and the procedures used to prevent drying prior to testing.

METHODS OF SAMPLING AND TESTING
MT 205-04
METHOD OF TEST FOR SPECIFIC GRAVITY AND ABSORPTION OF COARSE AGGREGATES
(Modified AASHTO T 85)

1 Scope:

1.1 This method covers the determination of specific gravity and absorption of coarse aggregate. The specific gravity may be expressed as bulk specific gravity, bulk specific gravity (saturated-surface-dry (SSD)), or apparent specific gravity. The bulk specific gravity (SSD) and absorption are based on aggregate after 15 h soaking in water. This method is not intended to be used with lightweight aggregates.

1.2 This standard may involve hazardous materials, operations, and equipment. This standard does not purport to address all of the safety problems associated with its use. It is the responsibility of whoever uses this standard to consult and establish appropriate safety and health practices and determine the applicability of regulatory limitations prior to use.

2 Referenced Documents:

2.1 ***AASHTO:***

M 43 Sizes of Aggregate for Road and Bridge Construction
M 92 Wire Cloth Sieves for Testing Purposes
R 1 Metric Practice

MT Materials Manual:

MT 201 Sampling Roadway Materials
MT 202 Sieve Analysis of Fine and Coarse Aggregates
MT 204 Specific Gravity and Absorption of Fine Aggregate
MT 206 Terms Relating to Density and Specific Gravity of Solids, Liquids and Gases
MT 607 Reducing Field Samples of Aggregate to Testing Size

[1]This method agrees with ASTM C 127-88 except for differences in soaking time, accuracy of weighing, balance requirements, and water tank requirements.

2.2 ***ASTM Standards:***

C 125 Terminology Relating to Concrete and Concrete Aggregates
C 670 Practice of Preparing Precision Statements for Test Methods for Construction Materials

3 Summary of Method:

3.1 A sample of aggregate is immersed in water for approximately 15 h to essentially fill the pores. It is then removed from the water, the water dried from the surface of the particles, and weighed. Subsequently the sample is weighed while submerged in water. Finally the sample is oven-dried and weighed a third time. Using the weights thus obtained and formulas in the method, it is possible to calculate three types of specific gravity and absorption.

4 Terminology:

4.1 *Absorption* **-** The increase in the weight of aggregate due to water in the pores of the material, but not including water adhering to the outside surface of the particles, expressed as a percentage of the dry weight. The aggregate is considered "dry" when it has been maintained at a temperature of 110 ± 5°C for sufficient time to remove all uncombined water.

4 Terminology: (continued)

4.2 *Specific Gravity* - The ratio of the mass (or weight in air) of a unit volume of a material to the mass of the same volume of water at stated temperatures. Values are dimensionless.

4.3 *Apparent Specific Gravity* - The ratio of the weight in air of a unit volume of the impermeable portion of aggregate at a stated temperature to the weight in air of an equal volume of gas-free distilled water at a stated temperature.

4.4 *Bulk Specific Gravity* - The ratio of the weight in air of a unit volume of aggregate (including the permeable and impermeable voids in the particles, but not including the voids between particles) at a stated temperature to the weight in air of an equal volume of gas-free distilled water at a stated temperature.

4.5 *Bulk Specific Gravity (SSD)* - The ratio of the weight in air of a unit volume of aggregate, including the weight of water within the voids filled to the extent achieved by submerging in water for approximately 15 h (but not including the voids between particles) at a stated temperature, compared to the weight in air of an equal volume of gas-free distilled water at a stated temperature.

Note 1 - The terminology for specific gravity is based on terms in MT-206 and that for absorption is based on that term in ASTM C 125.

5 Apparatus:

5.1 *Balance* - A balance having a capacity of 1 kilogram or more and sensitive to 0.1 gram or less.

5.2 *Sample Container* - A wire basket of 3.35 mm (No. 6) or finer mesh, or a bucket of approximately equal breadth and height, with a capacity of 4 to 7 L for 37.5-mm (1½-in.) nominal maximum size aggregate or smaller, and a larger container as needed for testing larger maximum size aggregate. The container shall be constructed so as to prevent trapping air when the container is submerged.

5.3 *Water Tank* - A watertight tank into which the sample and container are placed for complete immersion while suspended below the balance, equipped with an overflow outlet for maintaining a constant water level.

5.4 *Sieves* - A 4.75 mm (No. 4) sieve or other sizes as needed (see Sections 6.2, 6.3, and 6.4), conforming to M 92.

5.5 *Suspended Apparatus* - Wire suspending the container shall be of the smallest practical size to minimize any possible effects of a variable immersed length.

6 Sampling:

6.1 Sample the aggregate in accordance with MT-201.

6.2 Thoroughly mix the sample of aggregate and reduce it to the approximate quantity needed using the applicable procedures in MT 607. Reject all material passing a 4.75 mm (No. 4) sieve by dry sieving and thoroughly washing to remove dust or other coatings from the surface. If the coarse aggregate contains a substantial quantity of material finer than the 4.75 mm sieve (such as for Size No. 8 and 9 aggregates in M 43), use the 2.36 mm (No. 8) sieve in place of the 4.75 mm sieve. Alternatively, separate the material finer than the 4.75 mm sieve and test the finer material according to MT-204.

6 Sampling: (continued)

6.3 The minimum weight of test sample to be used is given below. In many instances it may be desirable to test a coarse aggregate in several separate size fractions; and if the sample contains more than 15% retained on the 37.5 mm (1½-in.) sieve, test the material larger than 37.5 mm in one or more size fractions separately from the smaller size fractions. When an aggregate is tested in separate size fractions, the minimum weight of test sample for each fraction shall be the difference between the weights prescribed for the maximum and minimum sizes of the fraction.

Nominal Maximum Size, mm (in.)	Minimum Weight of Test Sample, kg (lb.)
12.5 (½) or less	2 (4.4)
19.0 (¼)	3 (6.6)
25.0 (1)	4 (8.8)
37.5 (1½)	5 (11)
50 (2)	8 (18)
63 (2½)	12 (26)
75 (3)	18 (40)
90 (3½)	25 (55)
100 (4)	40 (88)
112 (4½)	50 (110)
125 (5)	75 (165)
150 (6)	125 (276)

6.4 If the sample is tested in two or more size fractions, determine the grading of the sample in accordance with MT-202, including the sieves used for separating the size fractions for the determinations in this method. In calculating the percentage of material in each size fraction, ignore the quantity of material finer than the 4.75 mm (No. 4) sieve or 2.36 mm (No. 8) sieve when that sieve is used in accordance with Section 6.2.

7 Procedure:

7.1 Dry the test sample to constant weight at a temperature of 110 ± 5°C (230 ± 9°F), cool in air at room temperature for 1 to 3 h for test samples of 37.5 mm (1½-in.) nominal maximum size, or longer for larger sizes until the aggregate has cooled to a temperature that is comfortable to handle (approximately 50°C). Subsequently immerse the aggregate in water at room temperature for a period of 15 to 19 hours.

Note 2 -When testing coarse aggregate of large nominal maximum size requiring large test samples, it may be more convenient to perform the test on two or more sub-samples, and the values obtained combined for the computation described in Section 8.

7.2 Where the absorption and specific gravity values are to be used in proportioning concrete mixtures in which the aggregates will be in their naturally moist condition, the requirement for initial drying to constant weight may be eliminated, and, if the surfaces of the particles in the sample have been kept continuously wet until test, the 15-h soaking may also be eliminated.

Note 3 - Values for absorption and bulk specific gravity (SSD) may be significantly higher for aggregate not oven dried before soaking than for the same aggregate treated in accordance with Section 7.1. This is especially true of particles larger than 75 mm (3 in.) since the water may not be able to penetrate the pores to the center of the particle in the prescribed soaking period.

7.3 Remove the test sample from the water and roll it in a large absorbent cloth until all visible films of water are removed. Wipe the larger particles individually. A moving stream of air may be used to assist in the drying operation. Take care to avoid evaporation of water from aggregate pores during the operation of surface-drying. Weigh the test sample in the saturated surface-dry

7 Procedure: (continued)

condition. Record this and all subsequent weight to the nearest 1.0 g or 0.1% of the sample weight, whichever is greater.

7.4 After weighing, immediately place the saturated-surface-dry test sample in the sample container and determine its weight in water at 23 ± 1.7°C (73.4 ± 3°F), having a density of 997 ± 2 kg/m³. Take care to remove all entrapped air before weighing by shaking the container while immersed.

Note 4 -The container should be immersed to a depth sufficient to cover it and the test sample during weighing. Wire suspending the container should be of the smallest practical size to minimize any possible effects of a variable immersed length.

7.5 Dry the test sample to constant weight at a temperature of 110 ± 5°C (230 ± 9°F), cool in air at room temperature 1 to 3 h, or until the aggregate has cooled to a temperature that is comfortable to handle (approximately 50°C), and weigh. Use this weight for A in the calculations in section 8.

8 Calculations:

8.1 *Specific Gravity:*

8.1.1 *Bulk Specific Gravity*--Calculate the bulk specific gravity, 23/23°C (73.4/73.4°F), as follows:

Bulk sp gr = $A/(B - C)$

where:

A = weight of oven-dry test sample in air, g,

B = weight of saturated-surface-dry test sample in air, g, and

C = weight of saturated test sample in water, g.

8.1.2 *Bulk Specific Gravity (Saturated-Surface-Dry)* - Calculate the bulk specific gravity, 23/23°C (73.4/73.4°F), on the basis of weight of saturated-surface-dry aggregate as follows:

Bulk sp gr (saturated-surface-dry) = $B/(B - C)$

8.1.3 *Apparent Specific Gravity* - Calculate the apparent specific gravity, 23/23°C (73.4/73.4°F), as follows:

Apparent sp gr = $A/(A - C)$

8.2 *Average Specific Gravity Values* - When the sample is tested in separate size fractions, the average value for bulk specific gravity, bulk specific gravity (SSD), or apparent specific gravity can be computed as the weighted average of the values as computed in accordance with Section 8.1 using the following equation:

$$G = \frac{1}{\frac{P_1}{100G_1} + \frac{P_2}{100G_2} \ldots + \frac{P_n}{100G_n}}$$

where:

G = average specific gravity. All forms of expression of specific gravity can be averaged in this manner.

8 Calculations: (continued)

G_1, G_2...G_n = appropriate specific gravity values for each size fraction depending on the type of specific gravity being averaged.

P_1,P_2...P_n = weight percentages of each size fraction present in the original sample.

Note 5 - Some users of this method may wish to express the results in terms of density. Density may be determined by multiplying the bulk specific gravity, bulk specific gravity (SSD), or apparent specific gravity by the weight of water (997.5 kg/m³ or 62.27 lb ft³ at 23 ℃). Some authorities recommend using the density of water at 4 ℃ (1.000 kg/m³ or 1.000 Mg/m³ 3 or 62.43 lb/ft²) as being sufficiently accurate. Results should be expressed to three significant figures. The density terminology corresponding to bulk specific gravity, bulk specific gravity (SSD), and apparent specific gravity has not been standardized.

8.3 *Absorption* - Calculate the percentage of absorption, as follows:

Absorption, % = [(B - A)/A] X 100

8.4 *Average Absorption Value* - When the sample is tested in separate size fractions, the average absorption value is the average of the values as computed in Section 8.3, weighted in proportion to the weight percentages of the size fractions in the original sample as follows:

$A = (P_1A_1/100) + (P_2A_2/100) +. . . (P_nA_n/100)$

where:

A = average absorption, %.

A_1, A_2 ... A_n = absorption percentages for each size fraction, and

P_1, P_2 ... P_n = weight percentages of each size fraction present in the original sample.

9 Report:

9.1 Report specific gravity results to the nearest 0.01, and indicate the type of specific gravity, whether bulk (saturated-surface-dry), or apparent.

9.2 Report absorption result to the nearest 0.1%.

9.3 If the specific gravity and absorption values were determined without first drying the aggregate, as permitted in Section 7.2, it shall be noted in the report.

10 Precision and Bias:

10.1 The estimates of precision of this test method listed in Table 1 are based on results from the AASHTO Materials Reference Laboratory Reference Sample Program, with testing conducted by this test method and ASTM C 127. The significant difference between the methods is that ASTM C 127 requires a saturation period of 24 ± 4 h, while MT-205 requires a saturation period of 15 h minimum. This difference has been found to have significant effect on the precision indices. The data are based on the analyses of more than 100 paired test results from 40 to 100 laboratories.

TABLE 1 Precision

	Standard Deviation (IS)[A]	Acceptable Range of Two Results (D2S)[A]
Single operator precision:		
Bulk specific gravity (dry)	0.009	0.025
Bulk specific gravity (SSD)	0.007	0.020
Apparent specific gravity	0.007	0.020
Absorption[B],%	0.088	0.25
Multilaboratory precision:		
Bulk specific gravity (SSD)	0.011	0.32
Apparent specific gravity	0.011	0.032
Absorption[B], %	0.145	0.41

[A] These numbers represent, respectively, the (IS) and (D2S) limits as described in ASTM C 670. The precision estimates were obtained from the analysis of combined AASHTO Materials Reference Laboratory reference sample data from laboratories using 15-h minimum saturation times and other laboratories using 24 ± 4-h saturation time. Testing was performed on normal weight aggregates, and started with aggregates in the oven-dry condition.

[B] Precision estimates are based on aggregates with absorptions of less than 2%.

METHODS OF SAMPLING AND TESTING
MT 206-04
TERMS RELATING TO DENSITY AND SPECIFIC GRAVITY OF SOLIDS, LIQUIDS, AND GASES
(Modified AASHTO 132)

1 Introduction:

1.1 Attention is called to the Appendix for information concerning the definitions that follow. Their meanings and their relationships to scientific terms are briefly explained. Some standards in which they are used are compared with standards in which other definitions have been applied.

1.2 **Density** (of solids and liquids)--The mass of a unit volume of a material at a specified temperature. The units shall be stated, such as grams per milliliter, grams per cubic centimeter, pounds per cubic foot, or other. If the material is a solid, the volume shall be that of the impermeable portion. The form of expression shall be:

Density at *x* . . . .

where *x* is the temperature of the material.

1.3 **Density** (of gases)--The mass of a unit volume of a gas at a stated temperature and pressure. The units shall be stated. The form of expression shall be:

Density at *x, y* . . . .

where:

x = temperature of the gas; and

y = pressure of the gas.

1.4 **Density, Apparent** (of solids and liquids)--The weight in air of a unit volume of a material at a specified temperature. The units shall be stated. If the material is a solid, the volume shall be that of the impermeable portion. The form of expression shall be:

Apparent density at *x* . . . .

where *x* is the temperature of the material.

1.5 **Density, Bulk** (of solids)--The weight in air of a unit volume of a permeable material (including both permeable and impermeable voids normal to the material) at a stated temperature. The unit shall be stated. The form of expression shall be:

Bulk density at *x* . . . .

where *x* is the temperature of the material

Note 1 - The accuracy of bulk density determinations is so low that corrections for air buoyancy and variations in the value for the acceleration of gravity are not warranted. Hence, this definition is based on weights in air.

1 Introduction: (continued)

1.6 **Specific Gravity** (of solids and liquids)--The ratio of the mass of a unit volume of a material at a stated temperature to the mass of the same volume of gas-free distilled water at a stated temperature. If the material is a solid, the volume shall be that of the impermeable portion. The form of expression shall be:

Specific gravity *x/y*°C . . . .

where:

x = temperature of the material, and

y = temperature of the water.

Note 2 - The term "relative density" with the same meaning as specific gravity is becoming more widely used.

1.7 **Specific Gravity** (of gases) - the ratio of the density of a gas, under the observed conditions of temperature and pressure, to the density of dry air of normal carbon dioxide content, at the same temperature and pressure. The units shall be stated. The form of expression shall be:

Apparent specific gravity *x/y*

where:

x = temperature of the gas, and

y = pressure of the gas.

1.8 **Specific Gravity, Apparent** (of solids and liquids)--the ratio of the weight in air of a unit volume of a material at a stated temperature to the weight in air of equal density of an equal volume of gas-free distilled water at a stated temperature. If the material is a solid, the volume shall be that of the impermeable portion. The form of expression shall be:

Apparent specific gravity *x/y*°C

where:

x = temperature of the material, and

y = temperature of the water.

1.9 **Specific gravity, Bulk** (of solids)--the ratio of the weight in air of a unit volume of a permeable material (including both permeable and impermeable voids normal to the material) at a stated temperature to the weight in air of equal density of an equal volume of gas-free distilled water at a stated temperature. The form of expression shall be:

Bulk specific gravity *x/y*°C

where:

x = temperature of the material, and

y = temperature of the water.

2 Appendix: Discussion of Definitions and Relationship to Scientific Terms

2.1 In scientific terminology, mass is a measure of the quantity of material in a body, and is constant regardless of geographical location, altitude, or atmospheric conditions, so long as no material is added or taken away. Weight is the force with which a body is attracted to the earth and varies from place to place with the acceleration of gravity.

2.2 When an equal-arm balance is used to compare an object with standards of mass ("weights"), the effects of variations in the acceleration of gravity are self-eliminating and need not be taken into account, but the apparent mass of the object is slightly different from the true mass because of the buoyant effects of the surrounding air. Mass can then be computed from apparent mass by applying a correction for air buoyancy. When a spring balance is used, an additional correction accounting for the local value of the acceleration of gravity is required for the computation of mass.

2.3 For many commercial and industrial processes the rigorous scientific distinction between mass, apparent mass, and weight is of no practical consequence and is therefore ignored. The term "weight" in general practice has been accepted as being the value secured when an object is weighed in air. This "weight" or "weight in air" is often converted to "weight in vacuo" by the application of an air buoyancy correction, and is then considered as synonymous with mass.

2.4 All of the definitions listed above are based on either "mass" or "weight in air," the distinction being that air buoyancy corrections have been applied in the former case and not in the latter. Density and specific gravity are based on mass, and should be similarly constant. Apparent density, bulk density, apparent specific gravity, and bulk specific gravity are based on weight in air, and therefore are subject to change with atmospheric conditions, locality, and altitude. These changes may be negligible, depending upon the accuracy required for the particular application.

2.5 The definitions are intended as a guide for future standardization of terminology relating to density and specific gravity. They do not represent the terminology presently used in many existing AASHTO and ASTM standards, which has become diversified to an undesirable extent by the variety of materials, procedures, and trade practices involved.

2.6 Specific gravity definitions refer to the weight of a unit volume of the sample compared with the weight of a unit volume of water.

2.7 The definition of bulk density, like the previous definition of bulk specific gravity, specifies that the volume shall include both permeable and impermeable voids normal to the material. This requirement for the inclusion of all voids is completely satisfied whether the volume is computed from the measured dimensions of a solid, or whether it is found by placing the material in a container of predetermined capacity. It would be expected that all standards using either of the two methods would identify the results in like terms.

2.8 The terms "permeable" and "impermeable" cannot be rigidly defined for general application. The exact meaning in a particular application is the conventional one inferred by the procedure specified for determining the density or specific gravity of the material in question. In AASHTO T 84 and T 85, the spaces between grains or particles of granular aggregates are not included in the permeable voids mentioned in the definition for bulk specific gravity. On the other hand, in AASHTO T 166, the method of test is designed to include in the permeable voids the spaces between particles or substances in compacted bituminous paving mixtures or other bonded or cemented mixtures.

METHODS OF SAMPLING AND TESTING
MT 207-04
CENTERLINE SOIL SURVEY

1 Introduction:

1.1 A centerline soil survey is an essential part of preliminary highway engineering. Information on the engineering properties and distribution of soils, rock and groundwater must be obtained before a reasonable and economic highway design can be developed. A soil survey is not intended to take the place of a thorough Geotechnical Foundation investigation.

1.2 The soil survey work depends on many factors which include scope of the proposed project, types and variability of materials found on the project, groundwater conditions, adverse geologic features, etc. Often field conditions found during the soil survey will increase or decrease the amount of work needed to supply the necessary information for design. The soil survey and the geotechnical investigation must be coordinated in order to preclude duplication of effort.

2 Referenced Documents:

2.1 ***AASHTO:***
T 190 Resistance R-Value and Expansion Pressure of Compacted Soils

MT Manual:
MT 210 Moisture-Density Relations of Soils Using a 5.5 lb. Rammer
MT 214 The Classification of Soil and Soil-Aggregate Mixtures
MT 230 Moisture-Density Relations of Soils Using a 10 lb. Rammer

3 Apparatus:

3.1 Equipment required to perform a soil survey may include but is not limited to the following items:

3.1.1 *Sampling tools:*
Hand shovels, picks, etc.
Hand augers, post hole diggers
Power augers and drills, etc.
Backhoes

3.1.2 *Instruments:*
Survey equipment
Nuclear moisture and density testing device
Camera & film

3.1.3 *Miscellaneous:*
Stakes and lath
Sample bags (17"X28" canvas 75 lb. capacity cloth)
Sealed containers (jars or plastic bags)
Field notebooks and forms

4 General Procedure:

4.1 General Procedure: Following is the <u>general</u> procedure which should be followed in conducting any soil survey. The complexity of the soil survey will depend upon many factors as discussed in 1.2 above.

4 General Procedure: (continued)

4.2 *Reconnaissance:* reconnaissance of the proposed project should be conducted with pertinent existing information in hand. Additional information available may include but is not limited to the following items:

Maintenance records
Construction records
Topographic & geologic maps
Historic use of the area
U.S. Department of Agriculture Soil Conservation Service
County soil survey reports
Utility company maps & locations
City and county plat maps
City, county and state health department information
Information from landowners and businesses
Aerial photography

4.3 Preliminary Survey Plan:

4.3.1 A preliminary plan should be determined prior to fieldwork. This should be based upon available information and intended scope. Approximate sample site locations should be determined to enable proper soil profile determination and adequate sampling. This plan will likely change as information is gained during the actual construction of the test sites.

4.3.2 Boring records should be kept in a systematic manner and referred to new centerline stationing and elevations for each project. Such records should include and be recorded on Lab Forms 30 and 111.

Describe each site or area investigated, with each test hole, boring, or test pit clearly located (horizontally and vertically) with reference to some established coordinate system or permanent monument.

Log each test hole, boring, test pit, or cut-surface exposure with the field description and location of each material encountered clearly shown by Montana Department of Highways' symbols and word descriptions used on Form 30.

Note *- Color photographs of samples, and exposed strata may be of considerable value to the Department. Each photograph should include a date and an identifying number or symbol.*

Identify all soils based on MT 214 Classification of Soils and Soil-Aggregate Mixtures for Highway Construction Purpose.

Record seepage and water-bearing zones and free water-table depth found in each test hole, boring or test pit.

Identify artifacts and items of cultural and historical significance.

Note items concerning environmental hazards or other worthy notes.

4.3.3 Identify vertical and/or horizontal change of original ground where instability problems exist (landslides, subsidence, etc.).

4.4 Soil Profile Determination and Sampling:

4.4.1 Boring or test pits should be taken for laboratory analysis from all areas which may supply appreciable quantities of earthwork, and known borrow areas. Embankment areas should be tested for areas of swamp conditions or loosely compacted soils that will result in embankment settlements. The spacing of these investigations will depend upon the geologic complexity of the project area and upon the importance of soil and rock parameters to the project design. The depth should be a minimum of five feet below the proposed top of subgrade elevation or to borrow area depth.

4.5 Sampling:

4.5.1 Accurately identify each sample with the project identification, location, date, test site number and depth below reference ground surface from which it was taken. Place identification inside the container, securely close the container, protect it to withstand rough handling, and mark it with proper identification on the outside of the container. Keep samples for natural moisture determination in sealed containers to prevent moisture loss. When drying of samples may affect classification or engineering properties, protect them to minimize moisture loss.

4.5.2 Soil and water samples should be taken from the probable, proposed, or existing centerline of pipe, channel bottom and bridge locations as well as probable borrow areas, to determine pH, resistivity and sulfate (SO_4) content of the soil and water. In areas of bad soils (resistivity less than 500), additional samples should be taken.

Sample Size	not less than 5 lbs. (2.3 Kg.)
Sample Size, Water	1 quart.

4.5.3 Evaluate performance of existing installations in the immediate vicinity of the proposed site, relative to their historical performance and environmental impact. Photos of relevant installations properly labeled are helpful.

4.5.4 Representative disturbed samples for laboratory classification tests of soil, rock, and local construction material should be supplemented by undisturbed specimens.

4.5.5 Standard traffic control is required while working on the PTW.

4.6 Testing:

4.6.1 Testing analysis should be performed on all samples for the following items and recorded on Form 111.
Soil class by MT 214
Liquid limit
Plastic limit
Percent of material passing the 10 mesh, 40 mesh, and 200 mesh sieve size.
Maximum dry density and optimum moisture content by MT 230 for A-1 soils, MT 210 for all other soils
In-place density and moisture content
"R" value by AASHTO T190, all soils except A-6 and A-7's.
Depth to water table

5 Field Procedure:

5.1 Overlay, New and Reconstruction Projects:

Survey data required for all projects is as follows:

5 Field Procedure: (continued)

The PTW should be cored at least 5' into the subgrade and sampled in the driving lanes (not the shoulder) as frequently as necessary.

Typical sampling frequency is one per 1/2 mile, more or less as conditions dictate.

Note and log the mat thickness.

Note and log base thickness and subgrade. Sample and determine moisture content, record soil class (MT 214), moisture, density and "R" value (AASHTO T190).

Perform a culvert inspection, take chemical corrosion samples where necessary. Take photos at locations of bad pipe.

Review the existing project and record its past performance. A narrative summary should be provided with the soil survey.

Problem areas must be shown and recommendations for sub-excavation and the proposed depth of sub-excavation should be noted.

Anticipated borrow material should be sampled and tested for R values and corrosion.

Projects, where the intent is to overlay the existing plant mix, should be cored and the cores submitted to the Materials Bureau for evaluation. A typical sampling frequency is one (1) core per lane mile with a minimum of five (5) cores per project. The frequency can and should be adjusted as conditions warrant. The cores will be evaluated to determine the in-place condition of the PMS and a report issued to Surfacing Design.

5.2 New and Reconstruction Projects Only:

Additional survey data for new and reconstruction projects only are as follows:

Review planning reports and anticipate alignment and grades.

Test holes in the field should be located to provide engineering soil properties where appreciable quantities of excavation will occur. Depth will be determined by the new grade line with holes extending about five feet below the proposed subgrade line. Typical sampling frequency is one per 1/2 mile, more or less as conditions dictate.

Tests should include samples of each soil strata encountered and the in place moisture, the chemical-corrosive properties, soil class (MT 214), "R" value (AASHTO T190), and the specific gravity for each strata.

Determine in place densities for shrink and swell determinations if frozen conditions do not exist.

A log of the test holes should be kept and the test holes plotted on a profile sheet.

Data obtained should be reviewed to determine if additional test sites (i.e., areas of refusal, inadequate depth, or of questionable frequencies) are required.

Topsoil depth and availability should be noted.

Any anticipated borrow material should be sampled for "R" value, chemical-corrosive properties, and moisture density purposes.

5.2 New and Reconstruction Projects Only: (continued)

If centerline is following close to the PTW and material in present embankment will be used, additional R-values and chemical-corrosive properties should be taken beneath the PTW driving lanes.

Potential borrow areas that have better quality soils (A-4(0) or better) should be investigated to determine their use in the top 2' of the subgrade especially in areas where surfacing materials are scarce.

6 Interpretation of Results:

6.1 Interpret the results of an investigation only in terms of actual findings and make every effort to collect and include all field and laboratory data from previous investigations in the same areas. Extrapolation of data into local areas not surveyed and tested can be done only where geologically uniform subsurface conditions of soil and rock are known to exist. Engineering properties of the soils and rocks encountered on important projects should not be predicted wholly on field identifications or classification but should be checked by laboratory and field tests made on samples collected.

6.2 The recommendations for design parameters can be made only by professionals who have specialized in the field of soils and foundations or highway engineering, and who are familiar with the problems for which the study is being made.

7 Report:

7.1 A soil survey investigation report should:

7.1.1 Locate the area investigated in terms pertinent to the project. This may include sketch maps or aerial photos on which the test holes, pits, and sample areas are located, as well as topographic items relevant to the determination of the various soil and rock types, such as contours, streambeds, sink holes, cliffs, etc. Where feasible, include a geologic map of the area investigated in the report.

7.1.2 Include copies of all borings, test-hole logs and laboratory test results.

7.1.3 Describe and relate the findings obtained by following the format of Section 4, General Procedure.

7.1.4 Provide preliminary shrink/swell recommendations. Shrink/swell information obtained from adjacent projects in the area should be included.

7.1.5 Provide recommendations relative to availability of better quality soils (A-4(0) or better) that could be used in the top 2' of the subgrade to reduce more costly surfacing material and to improve drainage.

Provide recommendations for additional testing required by core drill, seismic, etc., for materials inaccessible because of depth, topography, etc.

7.1.6 Each soil survey shall be submitted and distributed as follows:

1 copy to Preconstruction Bureau
1 copy to Geotechnical & Materials Bureau
1 copy to Surfacing Design - Materials Bureau
2 copies to be retained by the District

DRAINAGE EVALUATION FORM
MT 207

This form should be submitted with each soil survey. Each area of concern on the project should be noted.

Project No._____ Designation:_____

Date_____ Submitted by:_____

Station(s)_____

Are the ditch lines clear of standing water? _____

_____

Are the ditch lines and pavement edges free from weed growth that may indicate a moisture concentration? _____

_____

After a rain,

a) Is there moisture standing in the joints or cracks?_____

b) Is there any evidence of pumping?_____

c) Is there water standing at the outer edge of the shoulder?_____

d) Is there evidence that the water may pond on the shoulder?_____

Are joint sealants or crack sealants in good condition and preventing water from entering the pavement?__

Are the cross drainage conduits closed by debris?_____

AC Pavements

Is there moisture related distress evident such as; Stripping, Rutting, Cracking in Wheelpath, Shoulder Dropoff/Heave, Pumping, Water Bleeding, Swelling?

_____

_____

_____

_____

PCC Pavements

Is there moisture related distress evident such as; Pumping, Faulting, Corner Break, D-Cracking, Edge Joint Opening, Shoulder Dropoff/Heave, Punchout (CRCP only), Swelling, Slab Cracking? _____

_____

_____

_____

_____

Is there evidence of springs and excessively wet areas?_____

_____

_____

_____

_____

Are there slides or slumps noted along the alignment? _____

_____

_____

_____

Specific surface/subsurface drainage recommendations _____

_____

_____

Lab Form No. 111
Revised May 1989

Montana Department of Highways

Preconstruction Soil Survey Data

and Special Recommendations Relative to Subgrade and Road Surface Design

Project Number _____ Designation _____ Length _____ County _____ Date _____

Submitted by _____ Title _____ District Materials Supervisor _____ District Engineer _____

Sample Number	Date	Location of Boring	Depth	Representing Stationing		Soil Class (MT 214)	LL	PI	10 Mesh	40 Mesh	200 Mesh	Inplace Density	Maximum Dry Density	Percent Natural Moisture	Percent Optimum Moisture	Depth to Water Table	"R" Value (AASHTO T190)

Remarks

MT-207

April 1, 1992

10 of 10

MT 207

LOG OF BORING

MONTANA DEPARTMENT OF TRANSPORTATION

Geotechnical Section

Project Name: EXAMPLE - ENGLISH		Project Number: BR 549(0)	
Borehole Location: STA. 13+95, 20.8 ft. Lt. PTW Centerline		Borehole Number: EXAMPLE	Sheet 1 of 1
Drilling Equipment: CME 550	Hammer Type: Automatic	Driller: A. Driller	Logger: A. Logger
Drilling Fluid: Water	Borehole Diameter (in): 8	Date Started: 1/1/98	Date Finished: 1/1/98
Elevation and Datum: Ground: 3739.80	Casing:		

Notes: Legal Description - 01S18E32DAC. Elevation and Station provided by District Survey.

DEPTH (feet)	DRILL OPERATION	DRILL PRESSURE (psi)	DRILL RATE (fph)	CORE PERCENT RECOVERY	ROCK QUALITY DESIGNATION (RQD)	SAMPLE	RECOVERY (%)	STANDARD PENETRATION TEST SPT	DRY DENSITY (pcf)	MOISTURE CONTENT (%)	LIQUID LIMIT LL	PLASTIC LIMIT PL	GRAPHIC LOG	MATERIAL DESCRIPTION	DEPTH (feet)	REMARKS
														Sandy GRAVEL, coarse, subangular, damp, tan, medium dense.		Hollow stem auger with bullet bits.
5							100	5-10-5		15		NP				
															9.0	
10							100		100	30	53	18		CLAY, moist, gray, medium stiff, high plasticity, medium dry strength, slow dilatency, medium toughness.		qu = 250 psf @ 10 ft.
							95	3-4-3		27						
15															15.0	
							100	37-50/0.4 ft.						SHALE, moderately fissile, slightly weathered, hard field hardness, black, horizontal bedding.		Switched to NW triple tube core barrel with surface set bit @ 16 ft.
		500	15	100	65											
20																
		700	20	100	88											
25															25.0	

Bottom of Hole Elevation = 3714.80 ft.

GPJ MTDOT.GDT 3/25/98

Operation Types: Auger, Casing Advancer, Core Barrel, Drive Casing

Sampler Types: Split Spoon, Shelby, Bulk Sample, Grab Sample, Penetrometer, Vane Shear, Special Samplers, Testpit

WATER LEVEL OBSERVATIONS

While Drilling	12.1 ft	Upon Completion of Drilling	9.8 ft
Time After Drilling			
Depth To Water (feet)			

Remarks: Water table at 9.8 ft.

LOG_OF_BORING

MT 207

LOG OF BORING

MONTANA DEPARTMENT OF TRANSPORTATION

Geotechnical Section

Project Name: SAMPLE - Metric		Project Number:	
Borehole Location:		Borehole Number: -	Sheet 1 of 1
Drilling Equipment:	Hammer: Type:	Driller:	Logger:
Drilling Fluid:	Borehole Diameter (mm):	Date Started:	Date Finished:
Elevation and Datum: Ground:	Casing:	Notes:	

DEPTH (m)	DRILL: OPERATION	DRILL: PRESSURE (MPa)	DRILL: RATE (mph)	CORE PERCENT RECOVERY	ROCK QUALITY DESIGNATION (RQD)	SAMPLE	RECOVERY (%)	STANDARD PENETRATION TEST SPT	DRY DENSITY (kN/m³)	MOISTURE CONTENT (%)	LIQUID LIMIT LL	PLASTIC LIMIT PL	GRAPHIC LOG	MATERIAL DESCRIPTION	DEPTH (m)	REMARKS
2																
4																
6																
8																
10																

Operation Types: Auger; Casing Advancer; Core Barrel; Drive Casing

Sampler Types: Split Spoon; Shelby; Bulk Sample; Grab Sample; Penetrometer; Vane Shear; Special Samplers; Testpit

WATER LEVEL OBSERVATIONS

While Drilling ▽ ____ m Upon Completion of Drilling ▼ ____ m

Time After Drilling ____ ____ ____ ____

Depth To Water (m) ____ ____ ____ ____ ▼

Remarks:

LOG_OF_BORING BLANK-M.GPJ MTDOT.GDT 1/13/98

METHODS OF SAMPLING AND TESTING
MT 208-04
METHOD OF TEST FOR DETERMINING THE LIQUID LIMIT OF SOILS
(Modified AASHTO T 89)
and
METHOD OF TEST FOR DETERMINING THE PLASTIC LIMIT, AND THE PLASTICITY INDEX OF SOILS
(Modified AASHTO T 90)

1 Definition:

1.1 The Liquid Limit of a soil is that water content, as determined in accordance with the following procedure, at which the soil passes from a plastic to a liquid state.

1.2 The following applies to all specified limits in this standard: For the purposes of determining conformance with theses specifications, an observed value or a calculated value shall be rounded off “to the nearest unit” in the last right-hand place of figures used in expressing the limiting value, in accordance with AASHTO R 11.

2 Referenced Documents:

2.1 ***AASHTO:***
T 89 Determining the Liquid Limit of Soils
T 90 Determining the Plastic Limit and Plastcicty Index of Soils

MT Materials Manual:
MT-200 Dry Preparation of Disturbed Samples for Test
MT-227 Laboratory Determination of Moisture Content of Soils

3 Apparatus:

3.1 *Dish*--A porcelain dish, preferably unglazed, or similar mixing dish, about 115 mm (4½ in.) in diameter.

3.2 *Spatula*--A spatula or pill knife having a blade about 75 mm (3 in.) in length and about 20 mm (¾ in.) in width.

3.3 Liquid Limit Device:

3.3.1 *Manually Operated*--A device consisting of a brass dish and carriage, constructed according to the plan and dimensions shown in Figure 1.

3.3.2 *Mechanically Operated*--A motorized device equipped to produce the rise and rate of shocks to a brass cup as described in sections 4.2 and 5.3 of this procedure, respectively. The cup and the critical dimensions of the device shall conform to those shown in Figure 1 of this procedure. The device shall give the same liquid limit values as obtained with the manually operated device.

3.4 *Grooving Tool*--A grooving tool conforming to the critical dimensions shown in Figure 1. The gage need not be part of the tool.

3.5 *Gage*--A gage, whether attached to the grooving tool or separate, conforming to the critical dimension "d' shown in Figure 1 and may be, if separate, a metal bar 10.0 ± 0.2 mm (0.394 ± 0.008 in.) thick and approximately 50 mm (2 in.) long.

3.6 *Containers*--Suitable containers made of material resistant to corrosion and not subject to change in weight or disintegration on repeated heating and cooling. Containers shall have close-fitting lids to prevent loss of moisture from samples before initial weighing and to prevent absorption of moisture from the atmosphere following drying and before final weighing. One container is needed for each moisture content determination.

3 Apparatus: (continued)

3.7 *Balance*--A balance sensitive to 0.01 grams.

3.8 *Oven*--A thermostatically controlled drying oven capable of maintaining temperatures of 110 ± 5 C (230 ± 9 F) for drying moisture samples.

4 Sample:

4.1 A sample weighing about 100 g shall be taken from the thoroughly mixed portion of the material passing the 0.425 mm (No. 40) sieve which has been obtained in accordance with MT-200, Dry Preparation of Disturbed Soil and Soil Aggregate Sample for Test.

5 Adjustment of Liquid Limit Device:

5.1 The Liquid Limit Device shall be inspected to determine that the device is in good working order; that the pin connecting the cup is not worn sufficiently to permit side play; that the screws connecting the cup to the hanger arm are tight; that the points of contact on the cup and base are not excessively worn; that the lip of the cup is not excessively worn; and that a groove has not been worn in the cup through long usage. The grooving tool shall be inspected to determine that the critical dimensions are as shown in Figure 1 of this method.

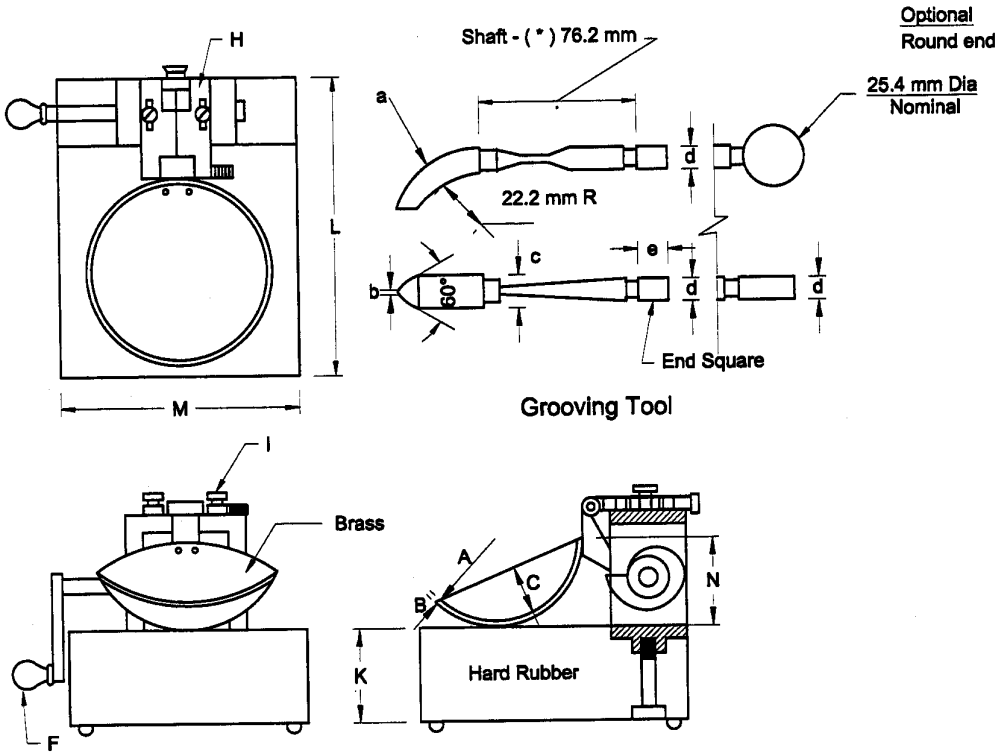

	Liquid Limit Device							Grooving Tool				
	Cup Assembly				Base			Curved End			Gage	
Dimension	A	B	C	N	K	L	M	a	b	c	d	*e
Description	Radius of Cup	Thickness of Cup	Depth of Cup	Cup at Cam Follower to Base	Thickness	Length	Width	Thickness	Cutting Edge	Width	Depth	Length
Metric, mm	54	2.0	27	47	50	150	125	10.0	2.0	13.5	10.0	15.9
Tolerance, mm	2	0.1	0	1.5	5	5	5	0.1	0.1	0.1	0.2	—

Note: Plate "H" may be designed for using (1) one securing screw (I).
An additional wear tolerance of 0.1 mm shall be allowed for dimension "b" for used grooving tools.
Feet for base shall be of resilient material.
(*) Nominal dimensions.
All tolerances specified are plus or minus (±) except as noted above.

Figure 1—Manual Liquid Limit Device

Note 3 - Wear is considered excessive when the point of contact on the cup or base exceeds approximately 13 mm (0.5 in.) in diameter, or when any point on the rim of the cup is worn to approximately ½ the original thickness. Although a slight groove in the center of the cup is noticeable, it is not objectionable. If the groove becomes pronounced before other signs of wear appear, the cup should be considered excessively worn. Excessively worn cups shall be replaced. A base which is excessively worn may be refinished as long as the thickness does not exceed the tolerance shown in Figure 1 by more than -2.5 mm (-0.1 in.) and the distance between the cup at the cam follower and the base is maintained within the tolerances specified in Figure 1.

5.2 *Adjust the height of drop of the cup so that the point on the cup that comes in contact with the base rises to a height of 10 ± 0.2 mm (0.394 ± 0.008 in.). See Figure 2 for proper location of the gage relative to the cup during adjustment.*

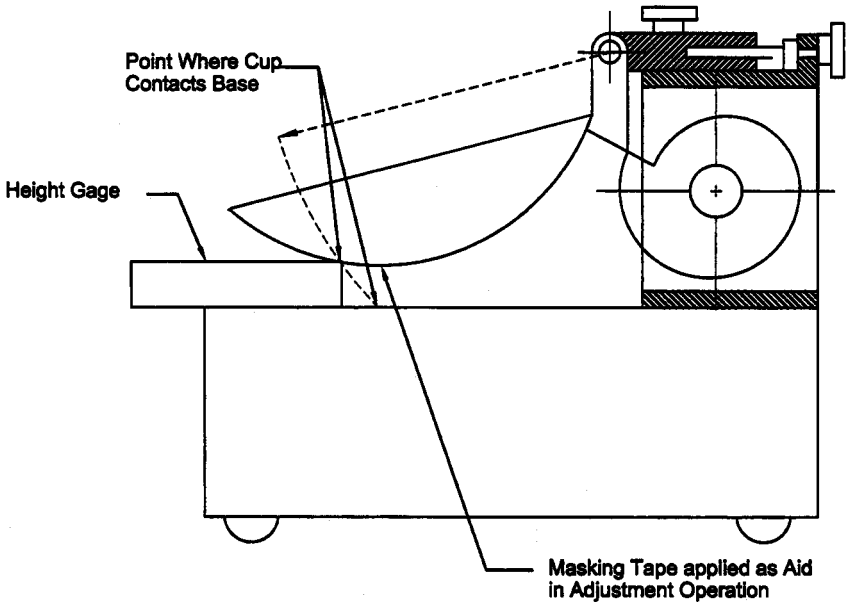

Figure 2—Calibration for Height of Drop

Note 4 - A convenient procedure for adjusting the height of drop is as follows: place a piece of masking tape across the outside bottom of the cup parallel with the axis of the cup hanger pivot. The edge of the tape away from the cup hanger should bisect the spot on the cup that contacts the base. For new cups, placing a piece of carbon paper on the base and allowing the cup to drop several times will mark the contact spot. Attach the cup to the device and turn the crank until the cup is raised to its maximum height. Slide the height gage under the cup from the front, and observe whether the gage contacts the cup or the tape. See Figure 2. If the tape and cup are both contacted, the height of drop is approximately correct. If not, adjust the cup until simultaneous contact is made. Check adjustment by turning the crank at two revolutions per second while holding the gage in position against the tape and cup. If a ringing or clicking sound is heard without the cup rising from the gage, the adjustment is correct. If no ringing is heard or if the cup rises from the gage, readjust the height of drop. If the cup rocks on the gage during this checking operation, the cam follower pivot is excessively worn and the worn parts should be replaced. Always remove tape after completion of adjustment operation.

6 Procedure:

6.1 The soil sample shall be placed in the mixing dish and thoroughly mixed with 15 to 20 ml of distilled or demineralized water by alternately and repeatedly stirring, kneading and chopping with a spatula. Further additions of water shall be made in increments of 1 to 3 ml. Each increment of water shall be thoroughly mixed with the soil as previously described before another increment of water is added. Once testing has begun, no additional dry soil should be added to the moistened soil. The cup of the Liquid Limit Device shall not be used for mixing soil and water. If too much moisture has been added to the sample, the sample shall either be discarded, or mixed and kneaded until natural evaporation lowers the closure point into an acceptable range.

Note 5 - Some soils are slow to absorb water, therefore, it is possible to add the increments of water so fast that a false liquid limit value is obtained. This can be avoided if more mixing and/or time is allowed. Tap water may be used for routine testing if comparative tests indicate no differences in results between using tap water and distilled or demineralized water. However, referee or disputed tests shall be performed using distilled or demineralized water.

6.2 When sufficient water has been thoroughly mixed with the soil to form a uniform mass of stiff consistency, a sufficient quantity of this mixture shall be placed in the cup above the spot where the cup rests on the base and shall be squeezed and spread with the spatula to level and at the same time trimmed to a depth of 10 mm at the point of maximum thickness. As few strokes of the spatula as possible shall be used, care being taken to prevent the entrapment of air bubbles within the mass. With the spatula the soil shall be leveled and at the same time trimmed to a depth of 10 mm at the point of maximum thickness. The excess soil shall be returned to the mixing dish. The soil in the cup of the device shall be divided by a firm stroke of the grooving tool along the diameter through the centerline of the cam follower so that a clean sharp groove of the proper dimensions will be formed as shown in Figure 3. To avoid tearing of the sides of the groove or slipping of the soil cake on the cup, up to six strokes from front to back or from back to front counting as one stroke, shall be permitted. The depth of the groove should be increased with each stroke and only the last stroke should scrape the bottom of the cup.

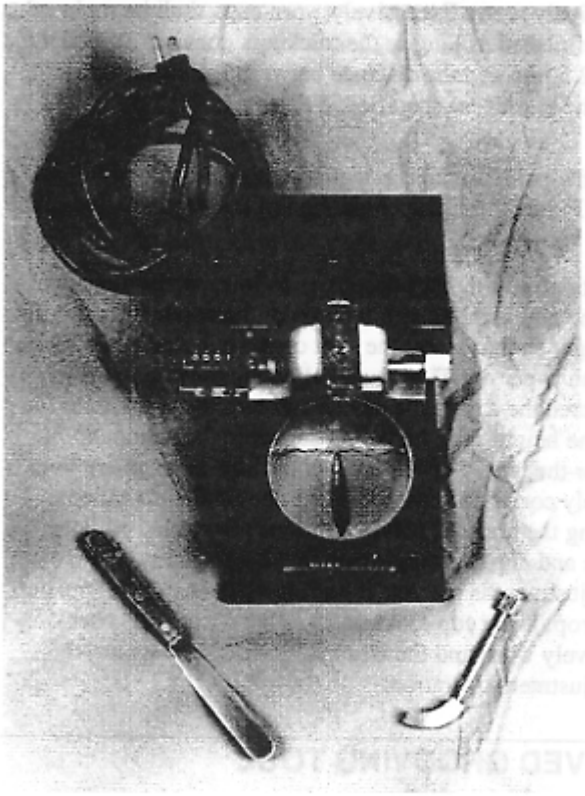

Figure 3—Liquid Limit Device With Soil Sample in Place

6 Procedure: (continued)

6.3 The cup containing the sample prepared as described in 6.2 shall be lifted and dropped by turning the crank F at the rate of approximately two revolutions per second until the two sides of the sample come in contact at the bottom of the groove along a distance of about 13 mm (0.5 in.). The number of shocks required to close the groove this distance shall be recorded. The base of the machine shall not be held with the free hand while the crank F is turned.

Note 6 - Some soils tend to slide on the surface of the cup instead of flowing. If this occurs, more water should be added to the sample and remixed, then the soil-water mixture placed in the cup, a groove cut with the grooving tool and 6.2 repeated. If the soil continues to slide on the cup at a lesser number of blows than 25, the test is not applicable and a note should be made that the liquid limit could not be determined.

6.4 A slice of soil approximately the width of the spatula, extending from edge to edge of the soil cake at right angles to the groove and including that portion of the groove in which the soil flowed together, shall be removed and placed in a suitable container. The container and soil shall then be weighed promptly and the weight recorded. The soil in the container shall be oven-dried to a constant weight at 110 ± 5 C (230 ± 9 F) and weighed. This weight shall be recorded and the loss in weight due to drying shall be recorded as the weight of water.

6.5 The soil remaining in the cup shall be transferred to the mixing dish. The cup and grooving tool shall then be washed and dried in preparation for the next trial.

6.6 The foregoing operations shall be repeated for at least two additional portions of the sample to which sufficient water has been added to bring the soil to a more fluid condition. The object of this procedure is to obtain samples of such consistency that at least one determination will be made in each of the following ranges of shocks: 25-35, 20-30, 15-25, so the range in the three determinations is at least 10 shocks.

7 Calculation:

7.1 The water content of the soil shall be expressed as the moisture content in the percentage of the weight of the oven-dried soil and shall be calculated as follows:

$$\text{Percentage moisture} = \frac{\text{mass of water}}{\text{mass of oven dried soil}} \times 100$$

7.1.1 Calculate the percentage of moisture to the nearest whole percent.

8 Preparation of Flow Curve:

8.1 A "Flow Curve" representing the relation between moisture content and corresponding number of shocks shall be plotted in a semi-logarithmic graph with the moisture contents as abscissae on the arithmetical scale, and the number of shocks as ordinates on the logarithmic scale. The flow curve shall be a straight line drawn as nearly as possible through the three or more plotted points.

9 Liquid Limit:

9.1 The moisture content corresponding to the intersection of the flow curve with the 25 shock ordinate shall be taken as the liquid limit of the soil. Report this value to the nearest whole number.

METHOD B

10 Sample:

10.1 A sample weighing about 50 g shall be taken as described in 4.1.

11 Procedure:

11.1 The procedure shall be the same as prescribed in Sections 6.1 through 6.5 except that the initial amount of water to be added in accordance with Section 6.1 shall be approximately 8 to 10 ml and the moisture sample taken in accordance with Section 6.4 shall be taken only for the accepted trial.

11.2 For accuracy equal to that obtained by the standard three-point method, the accepted number of blows for groove closure shall be restricted between 22 and 28 blows. After obtaining a preliminary closure in the acceptable blow range, immediately return the soil remaining in the cup to the mixing dish and, without adding any additional water, repeat as directed in Sections 6.2 and 6.3. If the second closure occurs in the acceptable range (22 – 28 inclusive) and the second closure is within two (2) blows of the first closure, secure a water content specimen as directed in Section 6.4.

11.3 Groove closures between 15 and 40 blows may be accepted if variations of ± 5 percent of the true liquid limit are tolerable.

12 Calculation:

12.1 The water content of the soil at the time of the accepted closure shall be calculated in accordance with Section 7.1.

13 Liquid Limit:

13.1 The liquid limit shall be determined by one of the following methods: the nomograph, Figure 4; the multicurve; Figure 5; the slide rule with a special "blows" scale, Figure 6, or by any other method of calculation that produces equally accurate liquid limit values. The standard three-point method shall be used as a referee test to settle all controversies.

13.2 The key in Figure 4 illustrates the use of the nomograph (mean slope).

13.3 The chart (multi-flow curve), Figure 5, is used by plotting on it a point representing the moisture content vs. number of blows for the accepted trial, and drawing a line through the plotted point parallel to the nearest chart curve. The moisture content corresponding to the intersection of this line with the 25-blow line shall be recorded as the liquid limit.

13.4 The special slide rule, Figure 6, is used by setting the hairline of the indicator slide coincident with the A-scale value of the moisture content for the accepted groove closure, and moving the special scale until the number of blows used for closure is also under the hairline. The liquid limit will then be found on the A-scale opposite the end index of the B-scale, or opposite the middle index of the B-scale, which in turn is directly in line with the 25-blow mark of the special scale.

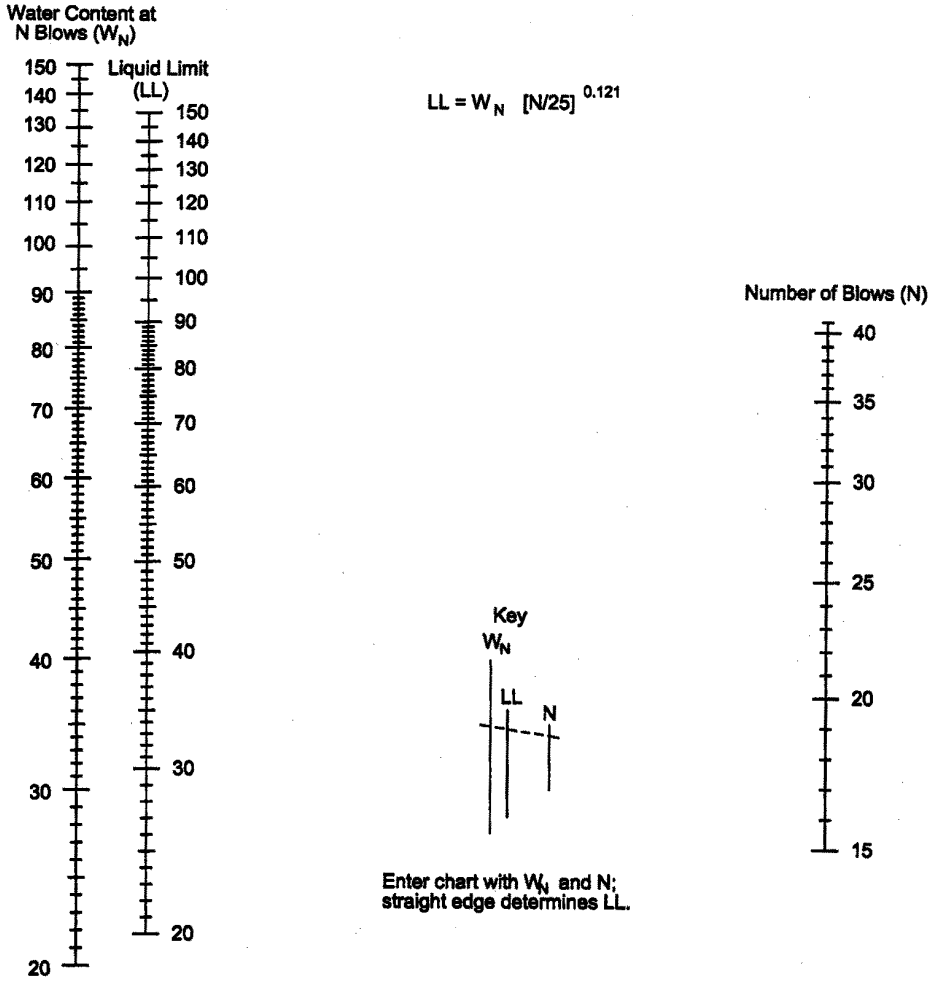

Figure 4—Nomographic chart Developed by the Waterways Experiment Station, Corps of Engineers, U.S. Army, to Determine Liquid Limit Using Mean Slope Method

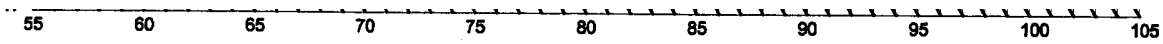

Figure 5—Chart Developed by Washington State Highway Department for the Calculation of the Liquid Limit

FIGURE 5 Chart Developed by Washington State Highway Department for the Calculation of

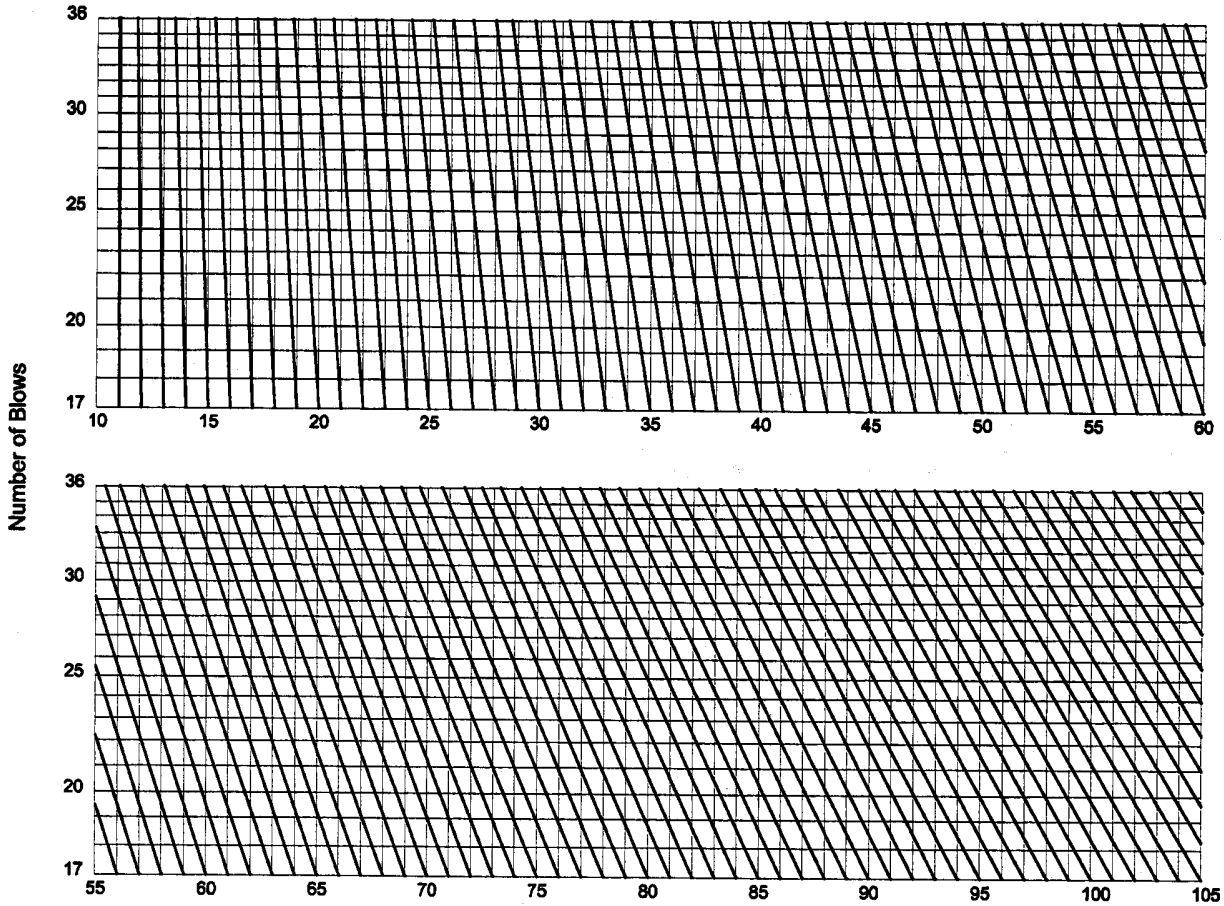

Figure 5—Chart Developed by Washington State Highway Department for the Calculation of the Liquid Limit

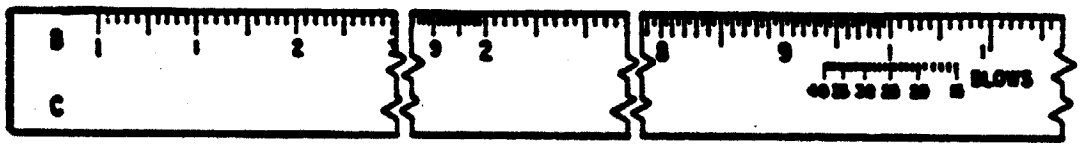

A - LOCATION OF SPECIAL SCALE (BLOWS) WITH RESPECT TO B SCALE OF SLIDE RULE

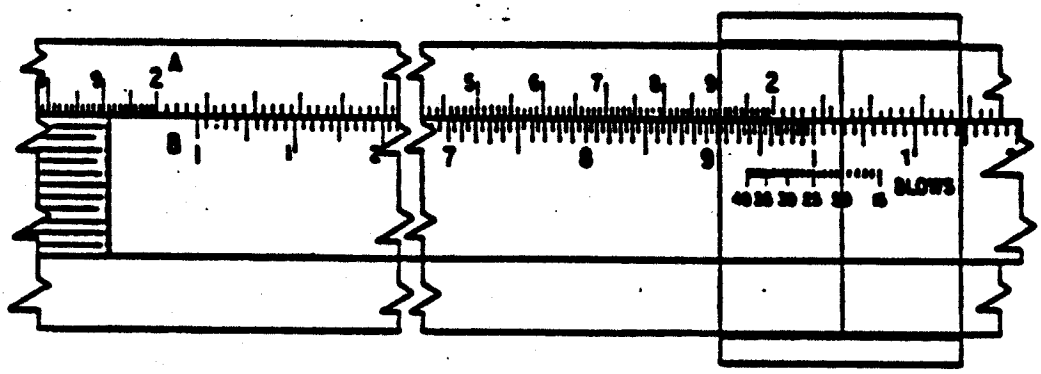

B - SLIDE RULE SET FOR 21.4 PERCENT MOISTURE AT 20 BLOWS, INDICATING CALCULATED LIQUID LIMIT OF 20.8

14 Method to be Used:

14.1 In making check or referee tests, Method A shall be used. The results of liquid limit tests are influenced by:

14.1.1 The time required to make the test.

14.1.2 The moisture content at which the test is begun.

14.1.3 The addition of dry soil to the seasoned sample.

15 Procedure:

15.1 Therefore, in making the liquid limit test for check, or referee purposes, the following time schedule shall be used:

15.1.1 Mixing of soil with water -- 5 to 10 minutes, the longer period being used for the more plastic soils.

15.1.2 Seasoning under a damp cloth -- 30 minutes.

15.1.3 Remixing before placing in the brass cup -- add 1 ml of water and mix for 1 minute.

15.1.4 Placing in the brass cup and testing -- 3 minutes.

15.1.5 Adding water and remixing -- 3 minutes.

15.2 No trial requiring more than 35 blows or less than 15 blows shall be recorded. In no case shall dried soil be added to the seasoned soil being tested.

METHODS OF SAMPLING AND TESTING
MT-208
METHOD OF TEST FOR DETERMINING
THE PLASTIC LIMIT, AND THE PLASTICITY INDEX OF SOILS
(Modified AASHTO T 90)

1 Scope:

1.1 The plastic limit of a soil is the lowest water content determined in accordance with the following procedure at which the soil remains plastic. The plasticity index of a soil is the range in water content, expressed as a percentage of the mass of the oven-dried soil, within which the material is in a plastic state. It is the numerical difference between the liquid limit and plastic limit of the soil.

1.2 The following applies to all specified limits in this standard: For the purposes of determining conformance with theses specifications, an observed value or a calculated value shall be rounded off "to the nearest unit" in the last right-hand place of figures used in expressing the limiting value, in accordance with AASHTO R 11.

2 Referenced Documents:

MT Materials Manual
MT-200 Dry Preparation of Disturbed Samples for Test
MT-208 Determining the Liquid Limit of Soils
MT 227 Laboratory Determination of Moisture Content of Soils

3 Apparatus:

3.1 *Dish* – A porcelain evaporating dish, or similar mixing dish about 115 mm in diameter.

3.2 *Spatula* – A spatula or pill knife having a blade about 75 mm in length and about 20 mm in width.

3.3 *Surface for Rolling* – A ground glass plate or piece of smooth, unglazed paper on which to roll the sample.

3.4 *Containers* - Suitable containers made of material resistant to corrosion and not subject to change in mass or disintegration on repeated heating and cooling. Containers shall have close fitting-lids to prevent loss of moisture from samples before initial weighing and to prevent absorption of moisture from the atmosphere following drying and before final weighing. One container is needed for each moisture content determination.

3.5 *Balance* – The balance shall sufficient capacity and conform to AASHTO M 231, Class G1.

3.6 *Oven* – A thermostatically controlled drying oven capable of maintaining temperatures of 110 ± 5ºC (230 ± 9ºF) for drying samples.

4 Sample:

4.1 If the plastic limit only is required, take a quantity of soil weighing about 20 g from the thoroughly mixed portion of the material passing the 0.425 mm (No. 40) sieve, obtained in accordance with paragraph 3.1. Place the air-dried soil in a mixing dish and thoroughly mix with distilled or demineralized water until the mass becomes plastic enough to be easily shaped into a ball. Take a portion of this ball weighing about 8 g for the test sample.

Note 1 - Tap water may be used for routine testing if comparative tests indicate no differences in results between using tap water and distilled or demineralized water. However, referee or disputed tests shall be performed using distilled or demineralized water.

4.2 If both the liquid and plastic limits are required, take a test sample weighing about 8 g from the thoroughly wet and mixed portion of the soil prepared in accordance with the Standard Method of

Test for Liquid Limit for Soils (MT-208). Take the sample at any stage of the mixing process at which the mass becomes plastic enough to be easily shaped into a ball without sticking to the

4 **Sample:** (continued)

fingers excessively when squeezed. If the sample is taken before completion of the liquid limit test, set it aside and allow to season in air until the liquid limit test has been completed. If the sample taken during the liquid limit test is to dry to permit rolling to a 3 mm (1/8 in.) thread, add more water and remix.

5 **Procedure:**

5.1 Select a 1.5 to 2.0 g portion from the mass taken in accordance with Section 4. Form the selected portion into an ellipsoidal mass.

5.2 Use one of the following methods to roll the soil mass into a 3 mm diameter thread at a rate of 80 to 90 strokes per minute, counting a stroke as one complete motion of the hand forward and back to the starting position again.

5.2.1 *Hand Rolling Method* - Roll the mass between the fingers and the ground-glass plate (or a piece of paper laying on a smooth horizontal surface) with just sufficient pressure to roll the mass into a thread of uniform diameter throughout its length. The thread shall be further deformed on each stroke so that its diameter reaches 3 mm, taking no more than 2 min. The amount of hand or finger pressure required will vary greatly, according to the soil. Fragile soils of low plasticity are best rolled under the outer edge of the palm or at the base of the thumb.

5.2 When the diameter of the thread becomes 3 mm (1/8 in.), break the thread into six or eight pieces. Squeeze the pieces together between the thumbs and fingers of both hands into a uniform mass roughly ellipsoidal in shape and reroll. Continue this alternate rolling to a thread 3 mm (1/8 in.) in diameter, gathering together, kneading and rerolling, until the thread crumbles under the pressure required for rolling and the soil can no longer be rolled into a thread. The crumbling may occur when the thread has a diameter greater than 3 mm (1/8 in.). This shall be considered a satisfactory end point, provided the soil has been previously rolled into a thread 3 mm (1/8 in.) in diameter. The crumbling will manifest itself differently with the various types of soil. Some soils fall apart in numerous small aggregations of particles; others may form an outside tubular layer that starts splitting at both ends. The splitting progresses toward the middle, and finally, the thread falls apart in many small platy particles. Heavy clay soils require much pressure to deform the thread, particularly as they approach the plastic limit, and finally, the thread breaks into a series of barrel-shaped segments each about 6.4 to 9.5 mm (¼ to _ in.) in length. At no time shall the operator attempt to produce failure at exactly 3 mm (1/8 in.) diameter by allowing the thread to reach 3 mm (1/8 in.) diameter by allowing the thread to reach 3 mm (1/8 in.) then reducing the rate of rolling or the hand pressure, or both, and continuing rolling without further deformation until the thread falls apart. It is permissible, however, to reduce the total amount of deformation for feebly plastic soils by making the initial diameter of the ellipsoidal-shaped mass bearer to the required 3 mm (1/8 in.) final diameter.

5.3 Gather the portions of the crumbled soil together and place in a weighed container. Immediately cover the container.

5.4 Repeat the operations described in sections 5.1 through 5.3 until the 8 g specimen is completely tested. Determine the moisture content of the soil in the containers in accordance with MT-227, and record the results.

6 Calculations:

6.1 Calculate the plastic limit, expressed as the water content in percentage of the mass of the oven-dry soil, as follows:

$$\text{Percentage moisture} = \frac{\text{mass of water}}{\text{mass of oven dried soil}} \times 100$$

Report the plastic limit to the nearest whole number.

6.2 Calculate the plasticity index of a soil as the difference between its liquid limit and its plastic limit, as follows:

Plastic index = liquid limit - plastic limit

6.3 Report the difference calculated as indicated in 6.2 as the plasticity index, except under the following conditions:

6.3.1 When the liquid limit or plastic limit cannot be determined, report the plasticity index as NP (non plastic).

6.3.2 When the plastic limit is equal to, or greater than, the liquid limit, report the plasticity index as NP.

METHODS OF SAMPLING AND TESTING
MT 209-04
METHOD OF TEST FOR
RESISTANCE TO ABRASION OF SMALL SIZE COARSE AGGREGATE
BY USE OF THE LOS ANGELES MACHINE
(Modified AASHTO T 96)

1 Scope:

1.1 This method covers a procedure for testing sizes of coarse aggregate smaller than 37.5 mm (1½ in.) for resistance to abrasion using the Los Angeles testing machine.

Note 1 - A procedure for testing coarse aggregate larger than 19.0 mm (¾ in.) is covered in the Method of Test for Resistance to Abrasion of Large Size Coarse Aggregate by the Los Angeles Machine (ASTM C 535).

2 Referenced Documents:

2.1 ***AASHTO:***

T 2 Sampling Aggregates
T 96 Resistance to Degrdation of Small-Size Coarse Aggregate by Abrasion and Impact in the Los Angeles Machine

MT Manual:

MT 202 Sieve Analysis of Fine and Coarse Aggregates
MT 405 Wire Cloth Sieves for Testing Purposes
MT 607 Reducing Field Samples of Aggregate to Testing Size

ASTM:

C 535 Test for Resistance to Degradation of Large-Size Coarse Aggregate by Abrasion and Impact in the Los Angeles Machine
C 670 Practice for Preparing Precision Statement for Test Methods for Construction Materials

3 Description of Terms:

3.1 *Constant Mass*-Test samples dried at a temperature of 110 ± 5°C (230 ± 9°F) to a condition such that it will not lose more than 0.1 percent moisture after 2 h of drying. Such a condition of dryness can be verified by weighing the sample before and after successive 2 h drying periods. In lieu of such a determination, samples may be considered to have reached constant mass when they have been dried at a temperature of 110 ± 5°C (230 ± 9°F) for an equal or longer period than that previously found adequate for producing the desired constant mass condition under equal or heavier loading conditions of the oven.

4 Apparatus:

4.1 *Los Angeles Machine*-The Los Angeles abrasion testing machine equipped with a counter and conforming in all its essential characteristics to the design shown in AASHTO T 96 shall be used. The machine shall consist of a hollow steel cylinder, closed at both ends, having an inside diameter of 711± 5 mm (28 ± 0.2 in.) and an inside length of 508 ± 5 mm (20 ± 0.2 in.). The cylinder shall be mounted on stub shafts attached to the ends of the cylinder but not entering it, and shall be mounted in such a manner that it may be rotated with the axis in a horizontal position within a tolerance in slope of 1 in 100. An opening in the cylinder shall be provided for the introduction of the test sample. A suitable, dust-tight cover shall be provided for the opening with means for bolting the cover in place. The cover shall be so designed as to maintain the cylindrical contour of the interior surface unless the shelf is to located that the charge will not fall on the cover, or come in contact with it during the test. A removable steel shelf extending the full length of the cylinder and projecting inward 89 ± 2 mm (3.5 ± 0.1 in.) shall be mounted on the interior cylindrical surface of the cylinder, or on the inside surface of the cover, in such a way that a plane centered between the large faces coincides with an axial plane. The shelf shall be of such thickness and so mounted, by bolts or other suitable means, as to be firm and rigid. The

position

4 Apparatus: (continued)

of the shelf shall be such that the distance from the shelf to the opening, measured along the outside circumference of the cylinder in the direction of the rotation, shall not be less than 1.27 m (50 in.).

Note 2 - The use of a wear-resistant steel, rectangular in cross-section and mounted independently of the cover, is preferred. However, a shelf consisting of a section of rolled angle, properly mounted on the inside of the cover plate, may be used provided the direction of rotation is such that the charge will be caught on the outside face of the angle. If the shelf becomes distorted from its original shape to such an extent that the requirements given in A1.2 of the Appendix to this method are not met, the shelf shall either be repaired or replaced before additional abrasion tests are made.

4.1.1 The machine shall be so driven and so counterbalanced as to maintain a substantially uniform peripheral speed. (Note 3). If an angle is used as the shelf, the direction of rotation shall be such that the charge is caught on the outside surface of the angle.

Note 3 - Back-lash or slip in the driving mechanism is very likely to furnish test results which are not duplicated by other Los Angeles machines producing constant peripheral speed.

4.2 *Sieves,* conforming to the Specifications for Wire-Cloth Sieves for Testing Purposes (MT-405).

4.3 *Balance*-The balance shall have a capacity over 2,000 grams thru 5,000 grams, sensitive to 1.0 grams, and with an accuracy of 1.0 gram or 0.1%.

4.4 *Oven*-The oven shall be capable of maintaining a uniform temperature of 110 ± 5°C (230 ± 9°F).

4.5 *Charge*-The charge shall consist of steel spheres averaging approximately 1 27/32 in. (46.8 mm) in diameter and each weighing between 390 and 445 g. (Note 4)

4.5.1 The charge, depending upon the grading of the test sample as described in Section 8, shall be as follows:

Grading	Number of Spheres	Weight of Charge, g
A	12	5,000± 25
B	11	4,584± 25
C	8	3,330± 20
D	6	2,500± 15

Note 4 - Steel ball bearings 1 13/16 in. (46.0 mm) and 1 7/8 in. (47.6 mm) in diameter, weighing approximately 400 and 440 g each, respectively, are readily available. Steel spheres 1 27/32 in. (46.8 mm) in diameter weighing approximately 420 g may also be obtainable. The charge may consist of a mixture of these sizes conforming to the weight tolerances of Sections 4.5 and 4.5.1.

5 Sampling:

5.1 The field sample shall be obtained in accordance with T 2 and reduced to test portion size in accordance with T 248.

6 Test Sample:

6.1 The test sample shall be washed and oven-dried to a constant mass as described in Section 3 (Note 5), separated into individual size fractions, and recombined to the grading of Table 1 most nearly corresponding to the range of sizes in the aggregate furnished for the work. The weight of the sample prior to test shall be recorded to the nearest 1.0 g.

7 Procedure:

7.1 Place the test sample and the charge in the Los Angeles testing machine and rotate the machine at a speed of 30 to 33 rpm for 500 revolutions. After the prescribed number of revolutions, discharge the material from the machine and make a preliminary separation of the sample on a sieve coarser than the 1.70 mm (No. 12). Sieve the finer portion on a 1.70 mm sieve in a manner conforming to MT-202. Wash the material coarser than the 1.70 mm sieve (Note 5), oven-dry to a constant mass, and weigh to the nearest 1.0 g (Note 6).

Note 5 - If the aggregate is essentially free of adherent coatings and dust, the requirement for washing before and after test may be waived. Elimination of washing after test will seldom reduce the measured loss by more than about 0.2% of the original sample weight.

Note 6 - Valuable information concerning the uniformity of the sample under test may be obtained by determining the loss after 100 revolutions. This loss should be determined without washing the material coarser than the 1.70-mm sieve. the ratio of the loss after 100 revolutions to the loss after 500 revolutions should not greatly exceed 0.20 for material of uniform hardness. When this determination is made, take care to avoid losing any part of the sample; return the entire sample, including the dust of fracture, to the testing machine for the final 400 revolutions required to complete the test.

8 Calculation:

8.1 Express the loss (difference between the original weight and the final weight of the test sample) as a percentage of the original weight of the test sample. Report this value as the percent loss.

Table 1 - Gradings of Test Samples

Sieve Size		Mass of Indicated Sizes, % Grading			
Passing	Retained on	A	B	C	D
mm					
37.5 (1 1/2 in.)	25.0 (1 in.)	1,250± 25	---	---	---
25.0 (1 in.)	19.0 (3/4 in.)	1,250± 25	---	---	---
19.0 (3/4 in.)	12.5 (1/2 in.)	1,250± 10	2,500± 10	---	---
12.5 (1/2 in.)	9.5 (3/4 in.)	1,250± 10	2,500± 10	---	---
9.5 (3/4 in.)	6.3 (1/4 in.)	---	---	2,500± 10	---
6.3 (1/4 in.)	4.75 (No. 4)	---	---	2,500± 10	---
4.75 (No. 4)	2.36 (No. 8)	---	---	---	5,000± 10
Total		5,000± 10	5,000± 10	5,000± 10	5,000± 10

Note 7 - The percent loss determined by this method has no known consistent relationship to the percent loss for the same material when tested by ASTM C 535.

APPENDIX

A1 Maintenance of Shelf

A1.1 The shelf of the Los Angeles Machine is subject to severe surface wear and impact. With use, the working surface of the shelf is peened by the balls and tends to develop a ridge of metal parallel to and about 32 mm (1¼ in.) from the junction of the shelf and the inner surface of the cylinder. If the shelf is made from a section of rolled angle, not only may this ridge develop but the shelf itself may be bent longitudinal or transversely from its proper position.

A1.2 The shelf should be inspected periodically to determine that it is not bent either lengthwise or from its normal radial position with respect to the cylinder. If either condition is found, the shelf should be repaired or replaced before further abrasion tests are made. The influence on the test result of the ridge developed by peening of the working face of the shelf is not known. However, for uniform test conditions, it is recommended that the ridge be ground off if its height exceeds 2 mm (0.1 in.).

METHODS OF SAMPLING AND TESTING
MT 210-08
METHOD OF TEST FOR THE MOISTURE-DENSITY RELATIONS OF SOILS USING A 5.5 LB. (2.5 KG) RAMMER AND A 12 IN. (305 MM) DROP
(Modified AASHTO T 99)

1 Scope:

1.1 These methods of test are intended for determining the relation between the moisture content and density of soils compacted in a mold of a given size with a 5.5 lb. (2.5 kg) rammer dropped from a height of 12 in. (305 mm). Four alternate procedures are provided as follows:
Method A--A 4 in. (101.60 mm) mold: soil material passing a 4.75 mm (No. 4) sieve Sections 3 and 4.
Method B--A 6 in. (152.40 mm) mold: soil material passing a 4.75 mm (No. 4) sieve Sections 5 and 6.
Method C--A 4 in. (101.60 mm) mold: soil material passing a 19.0 mm (¾ in.) sieve Sections 7 and 8.
Method D--A 6 in. (152.40 mm) mold: soil material passing a 19.0 mm (¾ in.) sieve Sections 9 and 10.

1.2 This test method applies to soils mixtures that have 40 percent or less retained on the 4.75 mm (No. 4) sieve, when Method A or B is used and 30 percent or less retained on the 19.0 mm (¾ in.) sieve, when Method C or D is used. The material retained on these sieves shall be defined as oversized particles (coarse particles).

1.3 If the test specimen contains oversize particles, and the test specimen is used for field density compaction control, corrections must be made according to MT 231 to compare the total field density with the compacted field density. The person or agency specifying the method shall specify a minimum percentage of oversize particles below which correction for oversize need not be applied. If no minimum is specified, correction shall be applied to samples with more than five percent by mass of oversize particles.

1.4 If the specified oversized maximum tolerances are exceeded, other methods of compaction must be used.

Note 1 – One method for the design and control of the compaction of such soils is to use a test fill to determine the required degree of compaction and a method to obtain that compaction. Then use a method specification to control the compaction by specifying the type and size of compaction equipment, the lift thickness and the number of passes.

1.5 The following applies to all specified limits in this standard: For the purposes of determining conformance with these specifications, an observed value or a calculated value shall be rounded off “to the nearest unit” in the last right-hand place of figures used in expressing the limiting value, in accordance with R11.

2 Referenced Documents;

2.1 ***AASHTO:***
T 99 Moisture-Density Relations of Soils Using a 5.5 lb. Rammer with a 12 Inch Drop
M 92 Wire Cloth and Sieves for Testing Purposes
R 11 Indicating Which Places of Figures Are to be Considered Significant in Specified Limiting Values
T224 Coarse Particle Correction

2 Referenced Documents: (continued)

MT Manual:
MT 203 Unit Weight of Aggregate
MT 405 Wire Cloth Sieves for Testing Purposes
MT 231 Coarse Particle Correction

3 Apparatus:

3.1 *Molds*--The molds shall be solid-wall, metal cylinders manufactured with dimensions and capacities given in 3.1.1. and 3.1.2 below. They shall have a detachable collar assembly approximately 2.375 in. (60 mm) in height, to permit preparation of compacted specimens of soil-water mixtures of the desired height and volume. The mold and collar assembly shall be so constructed that it can be fastened firmly to a detachable base plate made of the same material (Note 2).

Note 2 - Alternate types of molds with capacities as stipulated herein may be used, provided the test results are correlated with those of the solid-wall mold on several soil types and the same moisture-density results are obtained. Records of such correlation shall be maintained and readily available for inspection, when alternate types of molds are used.

3.1.1 A 4 in.(101.60 mm) Mold having a capacity of 1/30 (0.0333) ± 0.0003 cu. ft. (0.000943 ± 0.000008 m³) with an internal diameter of 4.000 ± 0.016 in. (101.6 ± 0.41 mm) and a height of 4.584 ± 0.005 in. (116.43 ± 0.13 mm).

3.1.2 A 6 in. (152.40 mm) Mold having a capacity of 1/13.33 (0.07500 ± 0.00075 cu. ft. (0.002124 ± 0.000021 m³) with an internal diameter of 6.000 ± 0.026 in. (152.4 ± 0.66 mm) and a height of 4.584 ± 0.005 in. (116.43 ± 0.13 mm).

3.1.3 *Molds Out of Tolerance Due to Use*--A mold that fails to meet manufacturing tolerances after continued service may remain in use provided those tolerances are not exceeded by more than 50 percent; and the volume of the mold, calibrated in accordance with Sec. 6 (Calibration of Measure) of MT-203, for Unit Weight of Aggregate, is used in the calculations.

3.2 *Rammer:*

3.2.1 *Manually Operated*--Metal rammer having a flat circular face of 2.000 ± 0.01 in. (50.80 ± 0.12 mm) diameter, a wear tolerance of 0.01 in. (0.25 mm) and weighing 5.50 ± 0.02 lb, (2.495 ± 0.009 kg). The rammer shall be equipped with a suitable guide-sleeve to control the height of drop to a free fall of 12.00 ± 0.06 (or 1/16) in. (305 ± 2 mm) above the elevation of the soil. The guide-sleeve shall have at least 4 vent holes, no smaller than 3/8 in. (9.5 mm) diameter spaced approxi-mately 90 deg. (1.57 rad) apart and approximately ¾ in. (19 mm) from each end; and shall provide sufficient clearance so the free fall of the rammer shaft and head is unrestricted.

3.2.2 *Mechanically Operated*--A metal rammer which is equipped with a device to control the height of drop to a free fall of 12.00 ± 0.06 (or 1/16) in. (305 ± 2 mm) above the elevation of the soil and uniformly distributes such drops to the soil surface (Note 2). The rammer shall have a flat circular face 2.000 ± 0.01 in. (50.80 ± 0.127 mm) diameter, a wear tolerance of 0.01 in. (0.25 mm) and a manufactured mass of 5.50 ± 0.02 lb. (2.495 ± 0.009 kg). The mechanical rammer shall be calibrated by ASTM Method D 2168 to give the same moisture-density results as with a manually operated rammer.

Note 3 - It may be impractical to adjust the mechanical apparatus so the free fall is 12 in. (305 mm) each time the rammer is dropped, as with the manually operated rammer. To make the adjustment of free fall, the portion of loose soil to receive the initial blow should be slightly compressed with the rammer to establish the point of impact from which the 12 in. (305 mm) drop is determined. Subsequent blows on the layer of soil being compacted may all be applied

3.2 Apparatus: (continued)

by dropping the rammer from a height of 12 in.

3.2.3 *Rammer Face*--The circular face rammer shall be used but a sector face may be used as an alternative provided the report shall indicate type of face used other than the 2 in. (50.8 mm) circular face and it shall have an area equal to that of the circular face rammer.

3.3 *Sample Extruder*--A jack, lever, frame, or other device adopted for the purpose of extruding compacted specimens from the mold.

3.4 *Balances and Scales*--A balance or scale of at least 25 lb. capacity having a sensitivity and readability to 0.01 lb., or a balance or scale having a capacity of approximately 11.5 kg and a sensitivity and readability to 5 grams. (Note 3) Also, a balance of at least 1 kg capacity with a sensitivity and readability to 0.1 g.

Note 4 - The capacity of the metric balance or scale should be approximately 11.5 kg when used to weigh the 6 in. (152 mm)mold and compacted, moist soil; however, when the 4-in. (102 mm) mold is used, a balance or scale of lesser capacity than the 11.5 kg may be used, if the sensitivity and readability is 5 g.

3.5 *Drying Oven*--A thermostatically controlled drying oven capable of maintaining a temperature of 110 ± 5º C (230 ± 9º F) for drying moisture samples.

3.6 *Straightedge*--A hardened-steel straightedge at least 10 in. (250 mm) in length. It shall have one beveled edge, and at least one longitudinal surface (used for final trimming) shall be plane within 0.01 in. per 10 in. (0.1 percent) (0.250 mm per 250 mm) of length within the portion used for trimming the soil (Note 5).

Note 5 - The beveled edge may be used for final trimming if the edge is true within a tolerance of 0.001 in. per 10 in. (0.1 percent) (0.250 mm per 250 mm) of length; however, with continued use, the cutting edge may become excessively worn and not suitable for trimming the soil to the level of the mold. The straightedge should not be so flexible that trimming the soil with the cutting edge will cause a concave soil surface.

3.7 ***Sieves***—2-in. (50 mm), ¾-in. (19.0 mm), and No. 4 (4.75 mm) sieves conforming to the requirements of MT-405 (AASHTO M 92), Sieves for Testing Purposes.

3.8 *Mixing Tools*--Miscellaneous tools such as mixing pan, spoon trowel, spatula, etc., or a suitable mechanical device for thoroughly mixing the sample of soil with increments of water.

3.9 *Containers*--Suitable containers made of material resistant to corrosion and not subject to change in weight or disintegration on repeated heating and cooling. Containers shall have close-fitting lids to prevent loss of moisture from samples before initial weighing and to prevent absorption of moisture from the atmosphere following drying and before final weighing. One container is needed for each moisture content determination.

METHOD A

4 Sample:

4.1 If the soil sample is damp when received from the field, dry it until it becomes friable under a trowel. Drying may be in air or by use of drying apparatus such that the temperature of the sample does not exceed 60º C (140º F). Then thoroughly break up the aggregations in such a manner to avoid reducing the natural size of individual particles.

4.2 Sieve an adequate quantity of the representative pulverized soil over the No. 4 (4.75 mm) sieve. Discard the coarse material, if any, retained on the No. 4 (4.75 mm) sieve.

4 Sample: (continued)

4.3 Select a representative sample, with a mass of approximately 7 lb. (3 kg) or more, of the soil prepared as described in Sections 4.1 and 4.2.

Note 6 – When developing a compaction curve for free-draining soils, such as uniform sands and gravels, where seepage occurs at the bottom of the mold and base plate, taking a representative moisture content sample from the mixing bowl may be preferred in order to determine the amount of moisture available for compaction.

5 Procedure:

5.1 Thoroughly mix the selected representative sample with sufficient water to dampen it to approximately four percentage points below optimum moisture content.

5.2 Form a specimen by compacting the prepared soil in the 4 in. (101.60 mm) mold (with collar attached) in three approximately equal layers to give a total compacted depth of about 5 in. (125 mm). Prior to compaction, place the loose soil into the mold and spread into a layer of uniform thickness. Lightly tamp the soil prior to compaction until it is not in a loose or fluffy state, using either the manual compaction rammer or a similar device having a face diameter of approximately 2 inches (50 mm). Compact each layer by 25 uniformly distributed blows from the rammer dropping free from a height of 12 in. (305 mm) above the elevation of the soil when a sleeve-type rammer is used, or from 12 in. (305 mm) above the approximate elevation of compacted soil when a stationary mounted type of rammer is used. During compaction, the mold shall rest firmly on a dense, uniform, rigid and stable foundation (Note 7).

Note 7 - Each of the following has been found to be a satisfactory base on which to rest the mold during compaction of the soil: A block of concrete, weighing not less than 200 lb. (90 kg), supported by a relatively stable foundation; a sound concrete floor; and for field application, such surfaces as found in concrete box culverts, bridges, and pavements.

5.2.1 Following compaction, remove the extension collar, carefully trim the compacted soil even with the top of the mold by means of the straightedge, and weigh the mold and moist soil in pounds, to the nearest 0.01 lb., or weigh in kilograms to the nearest 5 grams. For molds conforming to tolerances given in Section 3.1.1 and masses recorded in pounds, multiply the mass of the compacted specimen and the mold, minus the mass of the mold, by 30, and record the result as the wet density, W_1, in pounds per cubic foot, of compacted soil. For molds conforming to tolerances given in Section 3.1.1 and masses recorded in kilograms, multiply the mass of the compacted specimen and the mold, minus the mass of the mold, by 1060, and record the result as the wet density, W_1, in kilograms per cubic meter, of compacted soil. For used molds out of tolerance by not more than 50 percent (3.1.3), use the factor for the molds as determined in accordance with Section 6 (Calibration of Measure), MT-203.

5.3 Remove the material from the mold and slice vertically through the center. Take a representative sample of the material from one of the cut faces, weigh immediately, and dry in an oven at 110 ± 5°C (230 ± 9°F) for at least 12 hours, or to a constant mass to determine the moisture content. The moisture sample shall weigh not less than 100 g.

5.4 Thoroughly break up the remaining portion of the molded specimen until it will pass a No. 4 (4.75 mm) sieve as judged by eye, and add to the remaining portion of the sample being tested. Add water in sufficient amount to increase the moisture content of the soil by one or two percentage points, and repeat the above procedure for each increment of water added. Continue this series of determinations until there is either a decrease or no change in the wet unit mass. W_1, per cubic foot or cubic meter of the compacted soil (Note 6).

5 Procedure: (continued)

Note 8 - This procedure has been found satisfactory in most cases. However, in instances where the soil material is fragile in character and will reduce significantly in grain size due to repeated compaction, and in cases where the soil is a heavy-textured clayey material into which it is difficult

to incorporate water, a separate and new sample shall be used in each compaction test. In these cases, separate samples shall be thoroughly mixed with amounts of water sufficient to cause the moisture contents of the samples to vary by approximately two percentage points. The moisture points selected shall bracket the optimum moisture content, thus providing samples which when
compacted will increase in mass to the maximum density and then decrease in mass. The samples of soil-water mixtures shall be placed in covered containers and allowed to stand for not less than 12 hours before making the moisture-density test.

5.4.1 In instances where the soil material is fragile in character and will be reduced significantly in grain size by repeated compaction, a separate and new sample shall be used in each compaction test.

METHOD B

6 Sample:

6.1 Select the representative sample in accordance with 4.3, except that it shall have a mass of approximately 16 lb. (7 kg).

7 Procedure:

7.1 Follow the same procedure as described for Method A in Section 4, except for the following: Form a specimen by compacting the prepared soil in the 6-in. (152.4 mm) mold (with collar attached) in three approximately equal layers to give a total compacted depth of about 5 in. (125 mm), each layer being compacted by 56 uniformly distributed blows from the rammer. For molds conforming to tolerances in 3.1.2, and masses recorded in pounds, multiply the mass of the compacted specimen and the mold, minus the mass of the mold, by 13.3, and record the result as the wet density, W_1, in lb. ft.^{3}, of the compacted soil. For molds conforming to tolerances given in 3.1.2 and masses recorded in kilograms, multiply the mass of the compacted specimen and the mold, minus the mass of the mold, by 471, and record the results as the wet density, W_1, in kg/m^3, of compacted soil. For used molds out of tolerance by not more than 50 percent (3.1.3), use the factor for the mold as determined in accordance with Section 6 (Calibration of Measure), MT-203.

METHOD C

8 Sample:

8.1 If the soil sample is damp when received from the field, dry it until it becomes friable under a trowel. Drying may be in air or by use of drying apparatus such that the temperature does not exceed 60º C (140º F). Then thoroughly break up the aggregations in such a manner as to avoid reducing the natural size of individual particles.

8.2 Sieve an adequate quantity of the representative pulverized soil over the 3/4 in. (19.0 mm) sieve. Discard the coarse material if any, retained on the 3/4 in. (19.0 mm) sieve (Note 7).

Note 9 -The use of the replacement method previously specified, where the oversized particles are replaced with finer particles, to maintain the same percentage of coarse material, is not considered appropriate to compute the maximum density.

8.3 Select a representative sample, having a mass of approximately 12 lb. (5 kg) or more, of the soil prepared as described in 8.1 and 8.2.

9 Procedure:

9.1 Thoroughly mix the selected representative sample with sufficient water to dampen it to approximately 4 percentage points below optimum moisture content.

9.2 Form a specimen by compacting the prepared soil in the 4 in. (102.60 mm) mold (with collar attached) in three approximately equal layers to give a total compacted depth of about 5 in. (125 mm). Prior to compaction, place the loose soil into the mold and spread into a layer of uniform thickness. Lightly tamp the soil prior to compaction until it is not in a loose or fluffy state, using either the manual compaction rammer or a similar device having a face diameter of approximately 2 inches (50 mm). Compact each layer by 25 uniformly distributed blows from the rammer dropping free from a height of 12 in. (305 mm) above the elevation of the soil when a sleeve-type rammer is used, or from 12 in. (305 mm) above the approximate elevation of each finally compacted layer when a stationary mounted type rammer is used. During compaction, the mold shall rest firmly on a dense, uniform, rigid and stable foundation (Note 5).

9.2.1 Following compaction, remove the extension collar, carefully trim the compacted soil even with the top of the mold by means of the straightedge. Holes developed in the surface by removal of coarse material shall be patched with smaller size material. Weigh the mold and moist soil in pounds to the nearest 0.01 lb.; or weigh in kilograms to the nearest 5 grams. For molds conforming to tolerances given in Section 3.1.1, and masses recorded in pounds, multiply the mass of the compacted specimen and the mold, minus the mass of the mold, by 30, and record the result as the wet density, W_1, in lb./ft.^{3}, of compacted soil. For molds conforming to tolerances given in Section 3.1.1 and masses recorded in kilograms, multiply the mass of the compacted specimen and mold, minus the mass of the mold, by 1060, and record the result as wet density,
W_1, in kg/m^3, of compacted soil. For used molds out of tolerance by not more than 50 percent (3.1.3), use the factor for the mold as determined in accordance with Section 6 (Calibration of Measure), MT-203.

9.3 Remove the material from the mold and slice vertically through the center. Take a representative sample of the material from one of the cut faces, weigh immediately, and dry in an oven at 110 ± 5º C (230 ± 9º F) for at least 12 hours, or to constant mass, to determine the moisture content. The moisture content sample shall weigh not less than 500 g.

9.4 Thoroughly break up the remainder of the material until it will pass a 3/4 in. (19.0 mm) sieve and 90 percent of the soil aggregations will pass a 3/4 in. (4.75 mm) sieve as judged by eye, and add to the remaining portion of the sample being tested. Add water in sufficient amounts to increase the moisture content of the soil sample by one or two percentage points, and repeat the above procedure for each increment of water added. Continue this series of determinations until there is either a decrease or no change in the wet mass, W_1, per cubic foot or cubic meter of compacted soil (Note 8).

METHOD D

10 Sample:

10.1 Select the representative sample in accordance with 8.3 except that it shall have a mass of approximately 25 lb. (11 kg).

11 Procedure:

11.1 Follow the same procedure as described for Method C in Section 8 except for the following. Form a specimen by compacting the prepared soil in the 6 in. (152.4 mm) mold (with collar attached) in three approximately equal layers to give a total compacted depth of about 5 in. (125 mm), each layer being compacted by 56 uniformly distributed blows from the rammer. For molds conforming

11 Procedure: (continued)

to tolerances given in 3.1.2 and masses recorded in pounds, multiply the mass of the compacted specimen and the mold, minus the mass of the mold, by 13.3, and record the results as the wet unit mass, W_1, in lb/ft³, of the compacted soil. For molds conforming to tolerances given in 3.1.2 and masses recorded in kilograms, multiply the mass of the compacted specimen and mold, minus the mass of the mold, by 471, and record the result as the wet unit mass, W_1, in kg/m³ of compacted soil. For used molds out of tolerance by not more than 50 percent (3.1.3), use the factor for the mold as determined in accordance with Section 6 (Calibration of Measure) MT-203.

CALCULATIONS AND REPORT

12 Calculations:

12.1 Calculate the moisture content and the dry unit mass of the soil as compacted for each trial, as follows:

$$w = \frac{A - B}{B - C} \times 100$$

and

$$W = \frac{W_1}{w + 100} \times 100$$

where:

w = percentage of moisture in the specimen, based on oven dry mass of soil.
A = mass of container and wet soil.
B = mass of container and dry soil.
C = mass of container.
W = dry mass, in pounds per cubic foot of compacted soil, or kilograms per cubic meter of compacted soil, and
W_1 = wet density, in pounds, per cubic foot of compacted soil or kilograms per cubic meter of compacted soil.

13 Moisture-Density Relationship:

13.1 The calculation in 12.1 shall be made to determine the moisture content and corresponding oven-dry unit mass (density) in pounds per cubic foot or kilograms per cubic meter of the compacted samples. The oven-dry densities (unit weight) of the soil shall be plotted as ordinates and the corresponding moisture content as abscissas.

13.2 *Optimum Moisture Content*--When the densities and corresponding moisture contents for the soil have been determined and plotted as indicated in 13.1, it will be found that by connecting the plotted points with a smooth line, a curve is produced. The moisture content corresponding to the peak of the curve shall be termed the "optimum moisture-content" of the soil under the above compaction.

13.3 *Maximum Density*--The oven-dry density in pounds per cubic foot or kilograms per cubic meter of the soil at optimum moisture content shall be termed "maximum density" under the above compaction.

14 Report:

14.1 The report shall include the following:

14.1.1 The method used (Method A, B, C, or D),

14.1.2 The optimum moisture content, as a percentage, to the nearest whole number,

14.1.3 The maximum density in lbs. per cu. ft., to the nearest 0.1 lb/ft³ or in kilograms per cubic meter, the nearest 1 kg.,

14.1.4 In Methods C and D indicate if the material retained on the 19.0 mm sieve was removed or replaced.

14.1.5 Type of face if other than 2 in. (50.8 mm) circular.

METHODS OF SAMPLING AND TESTING
MT 211-04
METHOD OF TEST FOR
MOISTURE-DENSITY RELATIONS OF SOIL-CEMENT MIXTURES
(Modified AASHTO T 134)

1 Scope:

1.1 This method covers procedures for determining the relationship between the moisture content and the density of soil-cement mixtures when compacted before cement hydration as prescribed.

1.2 A 1/30 cu. ft. (0.9 liter) mold and a 5.5 lb. (2.5 kg) rammer dropped from a height of 12 in. (305 mm) are used and two methods, depending on soil gradation, are covered as follows:

1.2.1 *Method A* - Using soil material passing the 4.75 mm sieve. This method shall be used when 100 percent of the soil sample passes the 4.75 mm sieve, Sections 4 and 5.

1.2.2 *Method B* - Using soil sample passing the 19.0 mm sieve. This method shall be used when part of the soil sample is retained on the 4.75 mm sieve, Sections 6 and 7.

2 Referenced Documents:

2.1 ***AASHTO:***
T 134 Moisture-Density Relations of Soil-Cement Mixtures

MT Manual:
MT-203 Unit Weight of Aggregate
MT-405 Wire Cloth Sieves for Testing Purposes

3 Apparatus:

3.1 *Molds* - The molds shall be solid-wall, metal cylinders manufactured with dimensions and capacities shown in 3.1.1. They shall have a detachable collar assembly approximately 2 3/4 in. (60 mm) in height, to permit preparation of compacted specimens of soil-cement mixtures of the desired weight and volume. The mold and collar assembly shall be so constructed that it can be fastened firmly to a detachable base plate made of the same material.

Note 1 - Alternate types of molds with capacities as stipulated herein may be used, provided the test results are correlated with those of the solid-wall mold on several soil types and the same moisture-density results are obtained. Records of such correlations shall be maintained and readily available for inspection when alternate types of molds are used.

3.1.1 A 4-inch mold having a capacity of 1/30 ± 0.0003 cu. ft. (944 ± 8.5 cm^3) with an internal diameter of 4.000 ± 0.016 in. (101.6 ± 0.4 mm) and a height of 4.584 ± 0.005 in. (116.4 ± 0.1 mm).

3.1.2 *Molds Out of Tolerance Due to Use* - A mold that fails to meet manufacturing tolerances after continued service may remain in use provided those tolerances are not exceeded by more than 50 percent; and the volume of the mold, calibrated in accordance with Sec 6 (Calibration of Measure) of MT-203, Unit Weight of Aggregate, is used in the calculations:

3.2 *Rammer:*

3.2.1 *Manually Operated* - Metal rammer having a flat circular face of 2.000 ± 0.001 in. (50.8 ± 0.127 mm) diameter, a wear tolerance of 0.005 (0.127 mm) and weighing 5.50 ± 0.02 lb. (2.495 ± 0.009 kg) (Note 2). The rammer shall be equipped with a suitable guide-sleeve to control the height of drop to a free fall of 12.00 ± 0.06 (or 1/16 in.) (304.8 ± 1.524 mm) above the elevation of the soil.

3 **Apparatus:** (continued)

The guide-sleeve shall have at least 4 vent holes, no smaller than 3/8 in. (9.5 mm) diameter spaced approximately 90 deg. apart and approximately 3/4 in. (19 mm) from each end, and shall provide sufficient clearance so the free fall of the rammer shaft and head is unrestricted.

3.2.2 *Mechanically Operated* - A metal rammer which is equipped with a device to control the height of drop to a free fall of 12.00 ± 0.06 (or 1/16 in.) (304.8 ± 1.524 mm) above the elevation of the soil and uniformly distributes such drops to the soil surface. The rammer shall have a flat circular face 2.000 ± 0.001 in. (50.8 ± 0.127 mm) in diameter, a wear tolerance of 0.005 (0.127 mm) and a manufactured mass of 5.50 ± 0.02 lb. (2.495 ± 0.009 kg) (Note 2).

Note 2 - The rammer apparatus shall be calibrated with several soil-cement mixtures and the mass of the rammer adjusted, if necessary, to give the same moisture-density results as with the manually operated rammer. It may be impractical to adjust the mechanical apparatus so the free fall is 12 in. (305 mm) each time the rammer is dropped, as with the manually operated rammer. To make the adjustment of free fall, the portion of loose soil to receive the initial blow should be slightly compressed with the rammer to establish the point of impact from which the 12 in. (305 mm) drop is determined. Subsequent blows on the layer of soil-cement may all be applied by dropping the rammer from a height of 12 in. (305 mm) above the initial-setting elevation, or when the mechanical apparatus is designed with a height adjustment for each blow, all subsequent blows should have a rammer free fall of 12 in. (305 mm) measured from the elevation of the soil as compacted by the previous blow.

3.2.3 *Rammer Face* - The circular face rammer shall be used but a sector face rammer may be used as an alternative provided the report shall indicate type of face used other than the 2 in. (50.8 mm) circular face and it shall have an area equal to that of the circular face rammer.

3.3 *Sample Extruder* - A jack, lever, frame, or other device adopted for the purpose of extruding compacted specimens from the mold.

3.4 *Balances and Scales* - A balance or scale of at least 25 lb. capacity having a sensitivity and readability to 0.01 lb., or a balance or scale having a capacity of approximately 11.5 kg. and a sensitivity and readability to 5 grams. Also, a balance of at least 1 kg capacity with a sensitivity and readability to 0.1 gram.

3.5 *Drying Oven* - A thermostatically controlled drying oven capable of maintaining a temperature of 110 ± 5º C (230 ± 9º F) for drying moisture samples.

3.6 *Straightedge* - A hardened steel straightedge at least 10 in. (254 mm) in length. It shall have one beveled edge, and at least one longitudinal surface (used for final trimming) shall be plane within 0.01 in. per 10 in. (0.1 percent) of length within the portion used for trimming the soil (Note 3).

Note 3 -The beveled edge may be used for final trimming if the edge is true within a tolerance of 0.01 in. per 10 in. (0.1 percent) of length; however, with continued use, the cutting edge may become excessively worn and not suitable for trimming the soil to the level of the mold. The straightedge should not be so flexible that trimming the soil surface with the cutting edge will cause concave soil surface.

3.7 *Sieves* - 50, 19.0, 4.75 mm sieves conforming to the requirements of MT-405, Sieves for Testing Purposes.

3.8 *Mixing Tools* - Miscellaneous tools such as mixing pan, spoon, trowel, spatula, etc., or a suitable mechanical device for thoroughly mixing the sample of soil with increments of water.

3.9 *Container* - A flat, round pan for moisture absorption by soil-cement mixtures about 12 in. (300 mm) in diameter and 2 in. (50 mm) deep.

3 Apparatus: (continued)

3.10 *Moisture Containers* - Suitable containers made of material resistant to corrosion and not subject to change in weight or disintegration on repeated heating and cooling. Containers shall have close-fitting lids to prevent loss of moisture from samples before initial weighing and to prevent absorption of moisture from the atmosphere following drying and before final weighing. One container is needed for each moisture content determination.

3.11 *Butcher Knife* - A butcher knife approximately 10 in. (250 mm) in length, for trimming the top of the specimens.

METHOD A. USING SOIL MATERIAL PASSING A 4.75 mm SIEVE

4 Sample:

4.1 Prepare the sample for testing by breaking up the soil aggregations to pass the 4.75 mm sieve in such a manner as to avoid reducing the natural size of the individual particles. When necessary, first dry the sample until it is friable under a trowel. Drying may be accomplished by air drying or by the use of drying apparatus such that the temperature of the sample does not exceed 60º C (140º F).

4.2 Select a representative sample weighing approximately 6 lb. (2.72 kg) or more, of the soil prepared as described in 4.1.

5 Procedure:

5.1 Add to the soil the required amount of cement conforming to AASHTO M 85, Specifications for Portland Cement, or AASHTO M 240, Blended Hydraulic Cements. Mix the cement and soil thoroughly to a uniform color. When needed, add sufficient potable water to dampen the mixture to approximately four to six percentage points below the estimated optimum moisture content and mix thoroughly. At this moisture content, plastic soils, tightly squeezed in the palm of the hand, will form a cast that will fracture with only slight pressure applied by the thumb and fingertips; nonplastic soils will bulk noticeably. When the soil is a heavy-textured clayey material, compact the mixture of soil, cement, and water in the container to a depth of about 2 in. (50 mm) using the rammer described in 3.2.1 or a similar hand tamper. Cover, and allow to stand for not less than 5 min. but not more than 10 min. to aid dispersion of the moisture and to permit more complete absorption by the soil-cement. After the absorption period thoroughly break up the mixture, without reducing the natural size of individual particles, until it will pass a 4.75 mm sieve and then remix.

5.2 Form a specimen by compacting the prepared soil-cement mixture in the mold, with the collar attached, in three equal layers so as to give a total compacted depth of about 5 in. (127 mm). Compact each layer by 25 blows from the rammer dropping free from a height of 12 in. (305 mm) above the elevation of the soil-cement when a sleeve-type rammer is used, or from 12 in. (305 mm) above the approximate elevation of each finally compacted layer when a stationary-mounted type rammer is used. The blows shall be uniformly distributed over the surface of the layer being compacted. During compaction, the mold shall rest on a uniform, rigid foundation (Note 4). Following compaction, remove the extension collar, carefully trim the compacted mixture even with the top of the mold by means of the knife and straightedge, and weigh to the nearest 0.01 lb. (0.004 kg). Multiply the mass of the compacted specimen and mold, minus the mass of the mold by 30; record the results as the wet mass per cubic foot (kg/m³) W_1 of the compacted soil-cement mixture.

5 Procedure: (continued)

Note 4 - Each of the following has been found to be a satisfactory base on which to rest the mold during compaction of the soil; a block of concrete weighing not less than 200 lb. (90.8 kg), supported by a relatively stable foundation; a sound concrete floor; and for field application, such surfaces as found in concrete box culverts, bridges and pavements.

5.3 Remove the material from the mold and slice vertically through the center. Take a representative sample of the material, weighing not less than 100 grams, from the full height of one of the cut faces, weigh immediately, and dry in an oven at 230 ± 9ºF (110 ± 5ºC) for at least 12 hours or to constant mass. Calculate the moisture content of the sample as directed in Section 7. Record the results as the moisture content, w, of the compacted soil-cement mixture.

5.4 Thoroughly break up the remaining portion of the molded specimen until it will pass a 4.75 mm sieve as judged by eye, and add to the remaining portion of the sample being tested. Add water in sufficient amount to increase the moisture content of the soil-cement mixture by one or two percentage points, mix, and repeat the procedure given in 5.2 and 5.3 for each increment of water added. Continue this series of determinations until there is either a decrease or no change in the wet mass per cubic foot (kg/m^3) W_1 of the compacted soil-cement mixture.

Note 5 - This procedure has been found satisfactory in most cases. However, in instances where the soil material is fragile in character and will reduce significantly in grain size due to repeated compaction, a separate and new sample shall be used for each moisture-density determination.

METHOD B. USING MATERIAL PASSING A 19.0 mm SIEVE

6 Sample:

6.1 Prepare the sample for testing by segregating the aggregate retained on a 4.75 mm sieve and breaking up the remaining soil aggregations to pass the 4.75 mm sieve in such a manner as to avoid reducing the natural size of individual particles. When necessary, first dry the sample until it is friable under a trowel. Drying may be accomplished by air drying or by the use of drying apparatus such that the temperature of the sample does not exceed 60º C (140º F).

6.2 Sieve the prepared soil over the 75 mm (Note 6), 19.0 mm, and 4.75 mm sieves. Discard the material retained on the 75 mm sieve. Determine the percentage of material, by oven-dry mass, retained on the 19.0 mm and 4.75 mm sieves. Saturate the aggregate passing the 19.0 mm sieve and retained on the 4.75 mm sieve by soaking in potable water; surface-dry the material as required for later testing.

Note 6 - Most soil-cement construction specifications covering soil gradation limit maximum size material to 75 mm (3 in.) or less.

6.3 Select and maintain separate representative samples of soil passing the 4.75 mm sieve and of saturated, surface-dry aggregate passing the 19.0 mm sieve and retained on the 4.75 mm sieve so that the total sample will weigh approximately 11 lb. (5 kg) or more. The percentage, by oven-dry mass, of aggregate passing the 19.0 mm sieve and retained on the 4.75 mm sieve shall be the same as the percentage passing the 75 mm sieve and retained on the 4.75 mm sieve in the original sample.

7 Procedure:

7.1 Add to the portion of the soil sample passing the 4.75 mm sieve the amount of cement conforming to AASHTO M 85, Specifications for Portland Cement, AASHTO M 240. Blended Hydraulic Cement required for the total sample specified in 5.1. Mix the cement and soil thoroughly to a uniform color. When needed, add water to this soil-cement mixture and facilitate

moisture

7 Procedure: (continued)

dispersion as described for Method A in 4.1. After this preparation, add the saturated, surface-dry aggregate to the soil-cement mixture passing the 4.75 mm sieve and mix thoroughly.

7.2 Form a specimen by compacting the prepared soil-cement mixture in the mod (with the collar attached) and trim and weigh the compacted specimen as described for Method A in 5.2. During the trimming operation remove all particles that extend above the top level of the mold. Correct all irregularities in the surface by hand-tamping fine material into these irregularities and leveling the specimen again with the straightedge. Multiply the mass of the compacted specimen and mold, minus the mass of the mold, by 30; record the result as the wet mass per cubic foot, W_1 of the compacted soil-cement mixture.

7.3 Remove the material from the mold and take a sample for determining the moisture content as described for Method A in 5.3, except that the moisture sample shall weigh not less than 500g. Record the result as the moisture content *w*, of the compacted soil-cement mixture.

7.4 Thoroughly break up the remainder of the material as before until it will pass a 19.0 mm sieve and at least 90 percent of the soil particles smaller than a 4.75 mm sieve will pass a 4.75 mm sieve, as judged by eye, and add all other material remaining after obtaining the moisture sample. Add sufficient water to increase the moisture content of the soil-cement mixture by one or two percentage points, mix, and repeat the procedure described in 7.2 and 7.3 for each increment of water added. Continue this series of determinations until there is either a decrease or no change in the wet mass per cubic foot (kg/m^3) W_1 of the compacted soil-cement mixture (Note 5).

CALCULATIONS AND REPORTS

8 Calculations:

8.1 Calculate the moisture content and oven-dry mass per cubic foot of the compacted soil-cement mixture for each trial as follows:

$$w = \frac{A - B}{B - C} \times 100$$

$$W = \frac{W_1}{w + 100} \times 100$$

where:

w = percentage of moisture in the specimen,
A = mass of moisture can and wet soil-cement,
B = mass of moisture can and oven-dry soil cement,
C = mass of moisture can,
W = oven-dry mass in pounds per cubic foot (kg/m^3) of compacted soil-cement, and
W_1 = wet mass in pounds per cubic foot (kg/m^3) of compacted soil-cement.

9 Moisture-Density Relationship:

9.1 The calculations in Section 8 shall be made to determine the moisture content and corresponding oven-dry mass pounds per cubic foot (kg/m^3) (density) for each of the compacted soil-cement samples. The oven-dry mass, pounds per cubic foot (kg/m^3) (densities) of the soil-cement mixture shall be plotted as ordinates and the corresponding moisture contents as abscissas.

9 Moisture-Density Relationship: (continued)

9.2 *Optimum Moisture Content* - When the densities and corresponding moisture contents for the soil-cement mixture have been determined and plotted as indicated in 9.1, it will be found that by connecting the plotted points with a smooth line, a curve is produced. The moisture content corresponding to the peak of the curve shall be termed the "Optimum moisture content" of the soil-cement mixture under the compaction prescribed in these methods.

9.3 *Maximum Density* - The oven-dry mass, pounds per cubic foot (kg/m^3) of the soil cement mixture at "optimum moisture content" shall be termed "maximum density" under the compaction prescribed in these methods.

10 Report:

10.1 The report shall include the following:

10.1.1 The method used (Method A or B).

10.1.2 The optimum moisture content, and

10.1.3 The maximum density.

METHODS OF SAMPLING AND TESTING
MT 212-04
METHOD OF TEST FOR
DETERMINATION OF MOISTURE AND DENSITY OF IN-PLACE MATERIALS

1 Scope:

1.1 This method of test is intended as a means of determining the moisture and/or density of in-place materials, either in the natural state or after compaction.

1.2 In-place moisture and density determinations shall be made by the use of nuclear density/moisture equipment. Moisture may be determined by oven drying or by the calcium carbide method, MT-215.

2 Referenced Documents:

2.1 ***MT Manual:***
MT-215 Moisture Content by Calcium Carbide Method
MT-313 Procedure for Comparing Nuclear Gauge to Core Densities of Bituminous Paving Mixtures

2 Types of Equipment:

2.1 The types of equipment being used at the present time are:

2.1.1 A portable nuclear moisture/density gauge containing radioactive sources, electronics and rechargeable batteries

2.1.2 Standard Count Reference Block

2.1.3 AC Charger 115v/60Hz and DC Adapter 12v negative ground

2.1.4 Transport case designed and labeled for each specific gauge

2.1.5 Scraper Plate/Drill Rod Guide

2.1.6 Drill Rod and Drill Rod Extractor

2.1.7 Operators Manual and Gauge Booklet

2.2 The nuclear moisture/density gauges are calibrated by the Montana Department of Transportation for testing density of PCC and AC pavements. The gauges are also calibrated for both density and moisture of most soils and soil aggregate mixtures. The calibrations are stored electronically within the gauge.

2.3 Modes of density operation are backscatter and direct transmission (see Operator Manual). Direct transmission reduces surface roughness error and tests a larger volume of material resulting in increased precision. For these reasons, direct transmission is **required** whenever possible when testing soils and base gravels. Moisture may be tested with the source rod in <u>any</u> position.

3 Operating Instructions:

3.1 A manufacturer's instructional manual is furnished with each nuclear device and must be consulted for operational procedures. These procedures vary between gauges and must be

3 Operating Instructions: (continued)

followed carefully.

3.2 **NUCLEAR GAUGES SHALL ONLY BE DISTRIBUTED TO PERSONNEL WHO HAVE RECEIVED THE REQUIRED 8 HOUR RADIATION SAFETY AND NUCLEAR GAUGE OPERATION COURSE.** Upon successful completion of this training, the operator will be furnished a certification card which signifies that she/he is fully qualified to operate nuclear gauges. Additionally, gauge operators must attend a 2 to 4 hour refresher course at intervals not to exceed two years. This training will be provided by MDT.

3.3 District Materials Supervisors must ensure that each gauge operator has completed an approved operator training course, that their card is up to date and in their possession, and that a radiation monitoring device is properly utilized when handling nuclear gauges.

3.4 Some instructional procedures, which should be emphasized, are:

3.4.1 The operator should be very familiar with the Operator's Instruction Manual.

3.4.2 Always be aware of battery charge status and follow battery care instructions in Operator's Manual.

3.4.3 The gauge electronics must be turned on to warm up for a minimum of 15 minutes before taking the daily standard count or testing.

3.4.4 Standard counts shall be taken and recorded each day that gauges are put into use.

3.4.5 If the daily standard counts are more than 1% for density or 2% for moisture from the average of the previous four counts, procedures should be thoroughly examined and the counts taken again. If these counts also fail, problems with the gauge or procedure are indicated and the appropriate District or Area Laboratory should be contacted.

3.4.6 A Stability Test shall be performed:

3.4.6.1 Whenever the accuracy of the gauge is in doubt

3.4.6.2 Before gauge-core correlations

3.4.6.3 At least every two weeks during periods of routine testing.

STABILITY TEST

20 One-Minute Standard Counts
Use Actual Gauge Reading

3.4.6.4 Compute Average, (AVG.)

3.4.6.5 Compute Square Root of Avg., (□AVG.)

3.4.6.6 Compute Standard Deviation, (ST.DEV.)

3.4.6.7 Compute Stability Ratio, $\frac{\text{ST.DEV}}{\square\text{AVG.}}$ = Stability Ratio

3 Operating Instructions: (continued)

PASSING RATIOS:

	Moisture	Density
Model 3411-B	0.18-0.35	0.18-0.35
Model 3440	0.18-0.35	0.18-0.35

Note - If the ratio falls outside of the indicated ranges, procedures should be checked and the stability test taken again. If another failure occurs, contact the appropriate District or Area Lab.

3.4.7 Shovel, trowel or scraper and straightedge must be used to prepare the test site - **DO NOT USE THE STANDARD TEST BLOCK.**

3.4.8 Use minus No. 30 sieve size dry sand for seating the gauge base. Whenever available, this sand should be native to the project material.

3.4.9 A thin layer of sand should remain between the bottom of the gauge and the ground surface. Any unusual voids or air gaps can cause considerable decrease in density readings.

3.4.10 When testing soils, base gravel, pulverized plant mix materials, cement treated aggregates for acceptance, take two, one-minute counts in the direct transmission mode. Take the first count and record the moisture and density counts. Rotate the gauge 180º around the source rod and take the second count and record the moisture and density counts. The average of the two counts will constitute a test. A valid test consists of density counts in both gauge positions that are within 50 kg/m³ (3 lb/ft³).

3.4.11 When testing plant mix for density acceptance, <u>four (one minute)</u> tests at 90º intervals as in the pattern defined in MT-313 will be performed. All four one minute tests must be within 40 kg/m³ (2.5 lb/ft³). The average of the four tests will be the final test result.

3.4.12 Periodic comparison checks should be made using conventional methods.

4 Calculations:

4.1 Use Lab. Form No. 1000A for recording field determinations with Nuclear Devices. These forms are supplied through the Purchasing Services Bureau (Stores) upon request.

4.1.1 Wet density, dry density, and moisture, all in pounds per cubic foot, can be read directly from the gauge scales. Percent moisture can also be read directly.

4.1.2 $\frac{\text{Field Dry Density (lbs/ft}^3)}{\text{Proctor Dry Density}} \times 100 = \%\ \text{compaction}$

4.1.3 $\frac{\text{Field Wet Density (lbs/ft}^3)}{\text{Marshall Density}} \times 100 = \%\ \text{compaction}$

4.1.4 Compare field moisture to optimum moisture from the Proctor determination.

4.1.5 If problems occur on thin lift plant mix overlays, refer to pages 7 and 8 of this test procedure.

5 Radiological Considerations:

5.1 The use of nuclear devices is licensed by the Nuclear Regulatory Commission (NRC). The NRC requires a r adiation monitoring system for individuals. T hey also require the leak testing of nuclear gauges every six months.

5.2 The Materials Bureau has subscribed to a quarterly TLD badge service. We distribute these badges to all District Materials Supervisors and collect them once a quarter. The District Materials Supervisors issue these badges and instruct each nuclear gauge operator on the following:

5.2.1 Each nuclear gauge operator must wear a TLD badge attached to the front of his clothing or belt at waist level.

5.2.2 These TLD badges must not be transferred from one operator to another.

5.2.3 Whenever badges are not being worn, they must be stored at least 30 feet from nuclear gauges, out of direct sunlight, and away from excessive heat or dampness. **BADGES LEFT NEAR GAUGES ARE ESPECIALLY SUSCEPTIBLE TO UNFOUNDED HIGH READINGS.**

5.2.4 Whenever a TLD badge has a high reading, the individual to whom the badge was issued will be notified and must fill out a report and submit it to the Materials Bureau within five days. It is important that all facts and details be presented accurately and conscientiously including diagrams, distances and times. Statements from supervisors and witnesses are also valuable.

5.2.5 The District Materials Supervisor will keep an up-to-date record consisting of the individual's name, the date the badge was issued, the individual's age, the serial number of the gauge they are using, and the project to which the gauge is assigned. This information, along with the TLD badges will be mailed to the Materials Bureau within ten days after the end of the quarter.

5.2.6 An Occupational Radiation History form (NRC Form 4) must be completed by every employee operating a nuclear gauge. The completed form must be sent to the Materials Bureau.

5.2.7 The leak testing of all nuclear gauges will be performed by personnel in the Materials Bureau or other individuals designated by the Radiation Safety Officer to perform such tests. An up-to-date record of the results of these tests shall also be maintained by the Materials Bureau.

6 NRC Licenses and Documents:

6.1 All personnel engaged in activities licensed by the NRC can examine the following documents at the Materials Bureau in Helena.

6.1.1 Publication 10 CFR-19, Notices, Instructions, and Reports to Workers and Inspectors.

6.1.2 Publication 10 CFR-20, Standards for Protection Against Radiation.

6.1.3 NCR License No. 25-11498-01, including all conditions and incorporated documents.

6.1.4 Operating procedures applicable to licensed activities.

6.2 A notice giving the location of the above documents will be inserted in the nuclear gauge operator's manual or posted in the shipping container. This notice and a map showing the location and telephone number of the regional offices of the NRC will be posted on the bulletin boards or other conspicuous places in each district laboratory and area laboratory. Montana is located in Region IV, telephone (817)860-8100.

6 NRC Licenses and Documents: (continued)

6.3 The District Materials Supervisors are responsible to see that each gauge operator has com-bpleted training in radiation safety and nuclear gauge operations. Proper storage, transporting, and distribution within the districts is also a part of this responsibility.

6.4 Inspections will be conducted by the Materials Bureau to verify compliance with the requirements of the license.

7 Transportation, Storage and Maintenance:

7.1 These instruments require careful handling. The vehicle in which they are transported should be capable of keeping them dry and provide complete security from unauthorized personnel. It should also be equipped with a carrying rack to which the instrument cases can be strapped and locked. This is a precision instrument designed to give many years of good service providing it has proper care.

7.2 Requirements for nuclear gauge storage.

7.2.1 Storage areas are to be locked and posted with radiation caution signs.

7.2.2 When the equipment is not being used, it should be stored in a separate dry room or garage. The temperature in the storage area should be above freezing and the batteries in the device should be fully charged. Never store a device in an area where personnel are working or will be working. Radiation caution signs shall be posted at the entrance door of any storage area.

7.2.3 Radiation levels surrounding the storage area <u>shall not exceed two millirems per hour</u>. To help ensure low radiation levels outside the storage area, a gauge should be stored <u>as near the center of the room as practical</u>. Gauges should not be stored above, below or adjacent to a work area. The best way to assure radiation safety is to limit the number of gauges in a storage area. The <u>largest</u> number of gauges to be stored in one area is determined by the outside radiation level which shall not exceed 2 millirems per hour. The Materials Bureau in Helena shall be called to check the outside area to see if the radiation levels are acceptable.

7.2.4 Store the gauge fully charged. Battery charging during storage is not necessary but gauges should be given a full charge prior to initial use at the beginning of the construction season.

7.3 *Maintaining the Gauge:*

7.3.1 The Materials Bureau should be notified immediately when any breakdowns occur. It will be decided at that time whether the gauge should be sent to the Materials Bureau for repairs.

7.3.2 Clean and maintain the gauge regularly as recommended in the Operator's Manual.

7.4 The Nuclear Gauge Transport paper shall be kept with the nuclear gauge at all times. When transporting a gauge, the certification shall be filled out, visible and within reach of the driver.

8 Theory of Operation:

8.1 For theory of operation and other detailed descriptions, consult the manufacturer's manual for the particular model gauge that you are using.

METHODS OF SAMPLING AND TESTING
MT 213-04
METHOD OF TEST FOR PLASTIC FINES IN GRADED AGGREGATES AND SOILS BY USE OF THE SAND EQUIVALENT TEST
(Modified AASHTO T 176)

1 Scope:

1.1 This test is intended to serve as a rapid field test to show the relative proportions of fine dust or claylike material in soils or graded aggregates.

1.2 The following applies to all specified limits in this standard: For the purpose of determining conformance with these specifications, an observed value or a calculated value shall be rounded off "to the nearest unit" in the last right-hand place of figures used in expressing the limiting value.

2 Referenced Documents:

2.1 ***AASHTO:***
T 176 Plastic Fines in Graded Aggregates and Soils by Use of the Sand Equivalent Test

3 Apparatus:

3.1 A graduated plastic cylinder, rubber stopper, irrigator tube, weighted foot assembly, and siphon assembly, all conforming to their respective specifications and dimensions shown in Figure 1. Fit the siphon assembly to a 1 gal. (4 liter) bottle of working calcium chloride solution (see 2.8) placed on a shelf 36 ± 1 in. (915 ± 25 mm) above the work surface. In lieu of the specified 1 gal. (4 liter) bottle, a glass or plastic vat having a larger capacity may be used providing the liquid level of the working solution is maintained between 36 and 46 inches (915 to 1,170 mm) above the work surface.

Note 1 - An older model of weighted foot assembly has a guide cap that fits over the upper end of the graduated cylinder and centers the rod in the cylinder, and the foot of the assembly has a conical upper surface and three centering screws to center it loosely in the cylinder. The older model does not have the sand reading indicator affixed to the rod (Figure 1), but a slot in the centering screws of the weighted foot is used to indicate the sand reading. Apparatus with the sand reading indicator (Figure 1) is preferred for testing clayey materials.

3.2 A 3 oz. (85 ml) tinned box approximately 2¼ in. (57 mm) in diameter, with Gill style cover and having a capacity of 85 ± 5 ml.

3.3 A wide-mouthed funnel approximately 4 in. (100 mm) in diameter at the mouth.

3.4 A clock or watch reading in minutes and seconds.

3.5 A mechanical shaker as shown in Figure 3, having a throw of 8 ± 0.04 in. (203.2 ± 1.02 mm), and operating at 175 ± 2 cycles per minute (2.92 ± 0.03 Hz) (Note 2). Prior to use, fasten the mechanical sand equivalent shaker securely to a firm and level mount.

3.6 A manually operated shaker as shown in Figure 4, capable of producing an oscillating motion at the rate of 100 complete cycles in 45 ± 5 s, with a hand-assisted half stroke length of 5.0 ± 0.2 in. (127.00 ± 5.08 mm). The shaker shall be fastened securely to a firm and level mount by bolts or clamps if a large number of determinations are to be made.

Note 2 - The mechanical shaker shall be used when performing referee sand equivalent determinations. Either the mechanical or manually operated shaker should be used in lieu of the hand method whenever possible.

3 Apparatus: (continued)

3.7 Stock calcium chloride solution: Prepare the stock calcium chloride solution with the following:

454 g (1 lb.) technical grade anhydrous calcium chloride
2.050 g (1.640 ml.) USP glycerine
47 g (45 ml) formaldehyde (40 percent by volume solution)

3.7.1 Dissolve the calcium chloride in ½ gal. (1.89 liters) of distilled or demineralized water. Cool the solution, then filter it through Whatman No. 12 or equivalent filter paper. Add the glycerine and formaldehyde to the filtered solution, mix well, and dilute to 1 gal. (3.79 liters) with distilled or demineralized water.

3.8 Working calcium chloride solution: Prepare the working calcium chloride by diluting one measuring tin fill (85 ± 5 ml.) of the stock calcium chloride solution to 1 gal. (3.79 liters) with water. Use distilled or demineralized water for the normal preparation of the working solution. However, if it is determined that the local tap water is of such purity that it does not affect the test results, it is permissible to use in lieu of distilled or demineralized water except in the event of dispute.

3.9 A straightedge or spatula, suitable for striking off the excess soil from the tin measure.

3.10 A thermostatically controlled drying oven capable of maintaining a temperature of 110 ± 5º C (230 ± 9º F).

4 Control:

4.1 The temperature of the working solution should be maintained at 22 ± 3º C (72 ± 5º F) during the performance of this test. If field conditions preclude the maintenance of the temperature range, frequent referee samples should be submitted to a laboratory where proper temperature control is possible. It is also possible to establish temperature correction curves for each material being tested where proper temperature control is not possible. However, no general correction curve should be utilized for several materials even within a narrow range of sand equivalent values. Samples that meet the minimums and equivalent requirement at a working solution temperature below the recommended range need not be subject to referee testing.

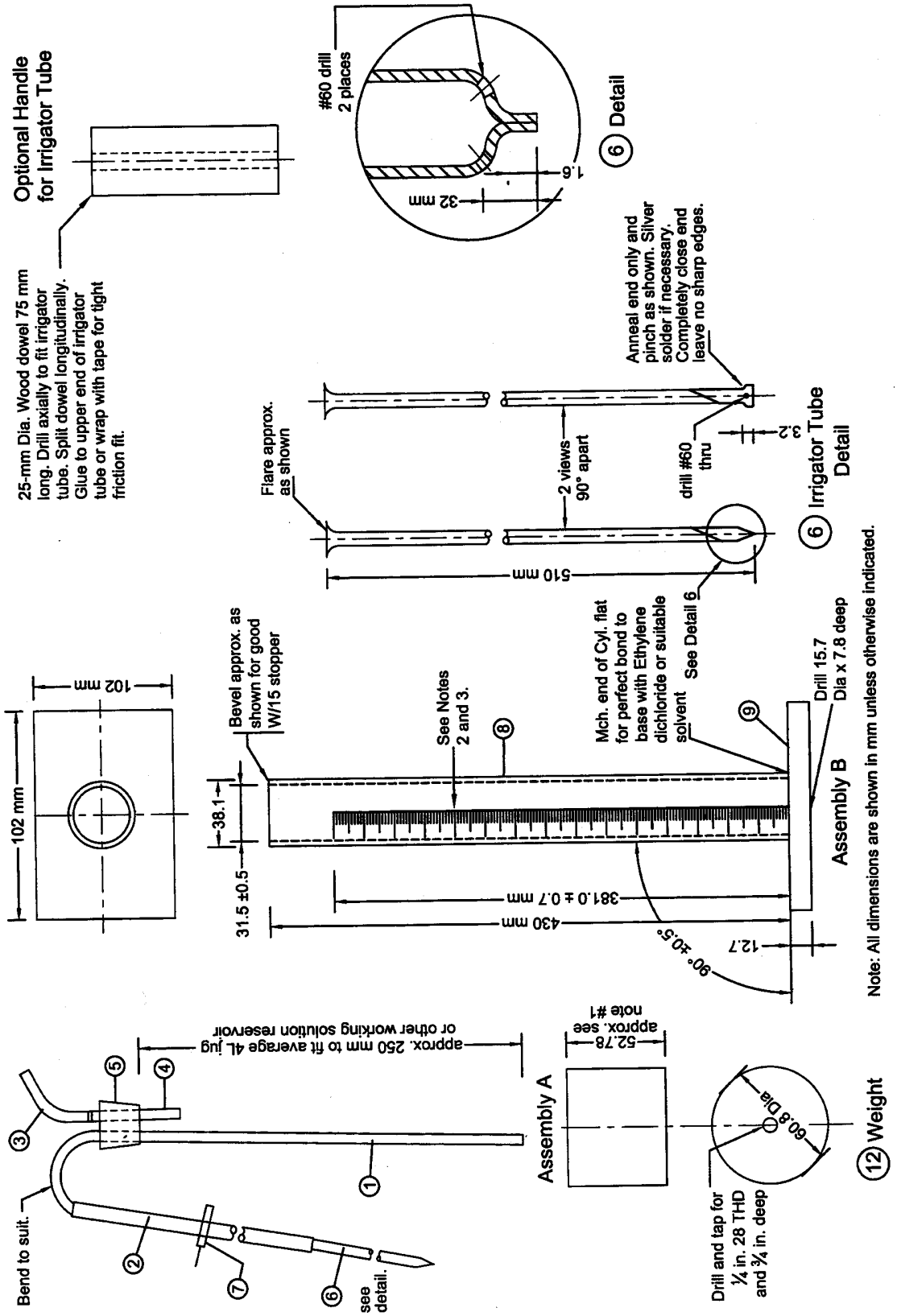

Figure 1—Sand Equivalent Apparatus

FIGURE 1 Sand Equivalent Test Apparatus

5 Sample Preparation:

5.1 The sand equivalent test shall be performed on soils or graded aggregate materials passing the 4.75 mm (No. 4) sieve. All aggregations of fine-grained soil material shall be pulverized to pass the 4.75 mm sieve, and all fines shall be cleaned from the particles retained on the 4.75 mm sieve and included with the material passing the 4.75 mm sieve.

5.2 Split or quarter enough of the original sample to yield slightly more than four 3-oz. (85 ml.) tin measures of material passing the 4.75 mm sieve. Use extreme care to obtain a truly representative portion of the original sample (Note 3).

Note 3 - Experiments show that as the amount of material being reduced by splitting or quartering is decreased, the accuracy of providing representative portions is reduced. It is imperative that the sample be split or quartered carefully. When it appears necessary, dampen the material before splitting or quartering, to avoid segregation or loss of fines.

5.3 Prepare the desired number of test samples by one of the following methods:

5.3.1 *Alternate Method No. 1 - Air Dry.*

5.3.1.1 Split or quarter enough material from the passing 4.75 portion to fill the 3 oz. (85 ml) tin measure so it is slightly rounded above the brim. While filling the measure, tap the bottom edge of the tin on the work table or other hard surface to cause consolidation of the material and allow the maximum amount to be placed in the tin. Strike off the tin measure level full with a spatula or straightedge.

5.3.2 *Alternate Method No. 2 - Pre-Wet.*

5.3.2.1 The sample must be in the proper moisture condition to achieve reliable results. This condition is determined by tightly squeezing a small portion of the thoroughly mixed sample in the palm of the hand. If the cast that is formed permits careful handling without breaking, the correct moisture range has been obtained. If the material is too dry, the cast will crumble and it will be necessary to add water and remix and retest until the material forms a cast. If the material shows any free water, it is too wet to test and must be drained and air dried, mixing it frequently to insure uniformity. This overly wet material will form a good cast when checked initially, so the drying process should continue until a squeeze check on the drying material gives a cast which is more fragile and delicate to handle than the original. If the moisture content of the original sample prepared in 5.2 is within the limits described above, the test sample may be obtained immediately. If the moisture content is altered to meet these limits, the altered sample should be placed in a pan, covered with a lid or with a damp cloth which does not touch the material, and allowed to stand for a minimum of 15 minutes.

5.3.2.2 After the minimum 15-minute tempering period, place the sample on the splitting cloth and mix by alternately lifting each corner of the cloth and pulling it over the sample toward the diagonally opposite corner, causing the material to be rolled. When the material appears homogeneous, finish the mixing with the sample in a pile near the center of the cloth.

5.3.2.3 Fill the 3 oz. (85 ml) tin measure by pushing it through the base of the pile while exerting pressure with the hand against the pile on the side opposite the measure. As the tin is moved through the pile, hold enough pressure with the hand to cause the material to fill the tin to overflowing. Press firmly with the palm of the hand, compacting the material and allowing the maximum amount to be placed in the tin. Strike off the tin measure level full with a spatula or straightedge.

5 Sample Preparation: (continued)

Note 4 - Moist test specimens produce lower sand equivalent values than the corresponding over-dry specimens with almost no exceptions, therefore, if a dual specification encompassing both the wet and dry methods of sample preparation is utilized, it will be necessary to determine the appropriate correction for each material since a standard correction does not appear possible. Either method can be employed with equal confidence, however.

5.3.3 Referee Method (Mechanical Shaker) - *Obtain the 3 oz. (85 ml) tin measure of material by one of the alternate methods, 5.3.1 or 5.3.2, above, then dry the test sample to constant mass at 110 ± 5º C (230 ± 9º F), and cool to room temperature before testing.*

6 Procedure:

6.1 Siphon 4 ± 0.1 in. (101.6 ± 2.5 ml) of working calcium chloride solution into the plastic cylinder. Pour the prepared test sample from the measuring tin into the plastic cylinder using the funnel to avoid spillage. Tap the bottom of the cylinder sharply on the heel of the hand several times to release air bubbles and to promote thorough wetting of the sample.

6.2 Allow the wetting sample to stand undisturbed for 10 ± 1 minutes. At the end of the 10-minute soaking period, stopper the cylinder, then loosen the material from the bottom by partially inverting the cylinder and shaking it simultaneously.

6.3 After loosening the material from the bottom of the cylinder, shake the cylinder and contents by any one of the following methods:

6.3.1 *Mechanical Shaker Method (Referee Method)* - Place the stoppered cylinder in the mechanical sand equivalent shaker, set the timer, and allow the machine to shake the cylinder and contents for 45 ± seconds.

6.3.2 *Manual Shaker Method* - Secure the stoppered cylinder in the three spring clamps on the carriage of the hand operated sand equivalent shaker and reset the stroke counter to zero. Stand directly in front of the shaker and force the pointer to the stroke limit marker painted on the backboard by applying an abrupt horizontal thrust to the upper portion of the right hand spring steel strap. Then remove the hand from the strap and allow the spring action of the straps to move the carriage and cylinder in the opposite direction without assistance or hindrance. Apply enough force to the right hand spring steel strap during the thrust portion of each stroke to move the pointer to the stroke limit marker by pushing against the strap with the ends of the fingers to maintain a smooth oscillating motion. The center of the stroke limit marker is positioned to provide the proper stroke length and its width provides the maximum allowable limits of variation. The proper shaking action is accomplished only when the tip of the pointer reverses direction within the marker limits. Proper shaking action can best be maintained by using only the forearm and wrist action to propel the shaker. Continue the shaking action for 100 strokes.

6.3.3 *Hand Method* - Hold the cylinder in a horizontal position as illustrated in Figure 7 and shake it vigorously in a horizontal linear motion from end to end. Shake the cylinder 90 cycles in approximately 30 seconds using a throw of 9 ± 1 in. (229 ± 25 mm). A cycle is defined as a complete back and forth motion. To properly shake the cylinder at this speed, it will be necessary for the operator to shake with the forearms only, relaxing the body and shoulders.

6.4 Following the shaking operation, set the cylinder upright on the work table and remove the stopper.

6.5 *Irrigation Procedure* - Insert the irrigator tube in the cylinder and rinse material from the cylinder walls as the irrigator is lowered. Force the irrigator through the material to the bottom of the cylinder by applying a gentle stabbing and twisting action

6 Procedure: (continued)

while the working solution flows from the irrigator tip. This flushes the fine material into suspension above the coarser sand particles. Continue to apply the stabbing and twisting action while flushing the fines upward until the cylinder is filled to the 15 in. (381 mm) mark. Then raise the irrigator slowly without shutting off the flow so that the liquid level is maintained at about 15 in. (381 mm) while the irrigator is being withdrawn. Regulate the flow just before the irrigator is entirely withdrawn and adjust the final level to 15 in. (381 mm).

6.6 Allow the cylinder and contents to stand undisturbed to 20 minutes ± 15 seconds. Start the timing immediately after withdrawing the irrigator tube.

6.7 At the end of the 20-minute sedimentation period, read and record the level of the top of the clay suspension. This is referred to as the "clay reading." If no clear line of demarcation has formed at the end of the specified 20-minute sedimentation period, allow the sample to stand undisturbed until a clay reading can be obtained, then immediately read and record the level of the top of the clay suspension and the total sedimentation time. If the total sedimentation time exceeds 30 minutes, rerun the test using three individual samples of the same material. Read and record the clay column height of that sample requiring the shortest sedimentation period only.

6.8 After the clay reading has been taken, the "sand reading" shall be obtained by one of the following methods:

6.8.1 When using the weighted foot assembly having the sand indicator on the rod of the assembly place the assembly over the cylinder and gently lower the assembly toward the sand. Do not allow the indicator to hit the mouth of the cylinder as the assembly is being lowered. As the weighted foot comes to rest on the sand, tip the assembly toward the graduations on the cylinder until the indicator touches the inside of the cylinder. Subtract 10 inches (254 mm) from the level indicated by the extreme top edge of the indicator and record this value as the "sand reading."

6.8.2 If an older model weighted foot assembly having centering screws is used, keep one of the centering screws in contact with the cylinder wall near the graduations so that it can be seen at all times while the assembly is being lowered. When the weighted foot has come to rest on the sand, read the level of the centering screw and record this value as the "sand reading."

6.9 If clay or sand readings fall between 0.1 in. (2.5 mm) graduations, record the level of the higher graduation as the reading. For example, a clay reading of 7.95 would be recorded as 8.0 and a sand reading of 3.22 would be recorded as 3.3.

Note 5 - Samples obtained from aggregate proposed for use in hot asphalt paving mixtures shall be prepared by oven-drying if acceptance of the material is based on tests on material that has passed through a hot plant drier.

7 Calculations:

7.1 Calculate the sand equivalent (SE) to the nearest 0.1 using the following formula:

$$SE = \frac{\text{Sand Reading}}{\text{Clay Reading}} \times 100$$

7 Calculations: (continued)

7.2 If the calculated sand equivalent is not a whole number, report it as the next higher whole number, as in the following example:

$$SE = \frac{3.3}{8} \times 100 = 41.25,$$

which is reported as 42.

7.3 If it is desired to average a series of sand equivalent values, average the whole number values determined as described above. If the average of these values is not a whole number, raise it to the next higher whole number, as in the following example:

Calculated SE values: 41.2, 43.8, 40.9

After raising each to the next higher whole number, they become: 42, 44, 41

The average of these values is then determined:

$$AVG \frac{42 + 44 + 41}{3} = 42.3$$

7.3.1 Since the average value is not a whole number, it is raised to the next higher whole number and the reported averages and equivalent value is reported as "43."

8 Precautions:

8.1 Perform the test in a location free of vibrations; vibrations may cause the suspended material to settle at a rate greater than normal.

8.2 Do not expose the plastic cylinders to direct sunlight any more than is necessary.

8.3 Removal of Organic Growth: Occasionally it may be necessary to remove an organic growth from the working calcium chloride solution container and from the inside of the flexible tubing and irrigator tube. This organic material can easily be seen as a slimy substance in the solution. To remove this growth, prepare a cleaning solvent by diluting sodium hypochlorite with an equal quantity of water (see Note 6). Fill the solution container with the prepared cleaning solvent, allow about a liter of the cleaning solvent to flow through the siphon assembly and irrigator tube, then place the pinch clamp on the end of the tubing to cut off the flow of solvent and to hold the solvent in the tube.

Note 6 - Chlorox or its equivalent has been found satisfactory for this purpose.

Refill the container and allow to stand overnight. After soaking, allow the cleaning solvent to flow out through the siphon assembly and irrigator tube. Remove the siphon assembly from the solution container and rinse both with clear water. The irrigator tube and siphon assembly can be rinsed easily by attaching a hose between the tip of the irrigator tube and water faucet and backwashing fresh water through the tube.

8.4 Occasionally the holes in the tip of the irrigator tube may become clogged by a particle of sand. If the obstruction cannot be freed by any other method, use a pin or other sharp object to force it out, using extreme care not to enlarge the size of the opening.

9 Operator Qualifications:

9.1 Before an operator is allowed to perform the sand equivalent test by either the manual method or the hand method, he must meet certain qualification requirements for that method. Although the qualification requirements are identical for both methods, an operator shall be permitted to use only that method for which he has qualified.

9.1.1 The operator must be capable of obtaining consistent sand equivalent test results on representative samples of any given material when the test is performed in accordance with the prescribed procedure for that particular method. An operator's test results are considered to be consistent if the individual results of three tests performed by him on representative samples of any given material do not vary by more than ± 4 points from the average of these tests.

8.1.2 The average of three tests by an operator on any given material must correspond within ± 4 points with the average of three tests on the same material when tested using the mechanical shaker method (Referee Method).

9.2 If an operator is not capable of obtaining consistent results with the manual shaker method, or if his results do not agree with results obtained by the mechanical shaker method, he is not to perform the sand equivalent test using the manual shaker until he has perfected his technique sufficiently to bring his test results into the specified limits without adjusting the required number of cycles.

8.3 If an operator is capable of obtaining consistent results when qualifying for the hand method, but the average of his results does not agree within the prescribed limits of the average of three results by the mechanical shaker method, he shall adjust the number of shaking cycles sufficiently to cause his results to agree with those by the mechanical shaker method. Determine the required adjustment in the shaking cycles by the following method:

9.3.1 Estimate the adjusted number of shaking cycles required. Increase the number of cycles to obtain a lower sand equivalent test result or decrease the number of cycles to obtain a higher sand equivalent test result. Perform three tests at the adjusted number of cycles. Strive to maintain the prescribed shaking rate of 180 cycles per minute. Compare the average of the three test results using the adjusted number of strokes with the average obtained by the mechanical shaker method. If necessary, readjust the number of shaking cycles until the average result of three tests at the adjusted number of cycles is within ± 4 points of the average obtained by the mechanical shaker.

9.4 The ± 4 points is a minimum qualification and should not be considered perfection. Each operator should strive to perfect his technique to obtain results equivalent to those of the mechanical shaker method.

8.5 Operators should be required to perform qualification test whenever their results tend to vary appreciably from those obtained using the mechanical shaker method. Qualification tests should be made at regular intervals to assure a reasonable degree of accuracy and standardization of test results.

.

METHODS OF SAMPLING AND TESTING
MT 214-09
RECOMMENDED PRACTICE FOR THE CLASSIFICATION OF SOILS AND SOIL-AGGREGATE MIXTURES FOR HIGHWAY CONSTRUCTION PURPOSES
(Modified AASHTO M 145)

1 Scope:

1.1 This recommended practice describes a procedure for classifying soils into seven groups based on laboratory determination of particle-size distribution, liquid limit and plasticity index. Evaluation of soils within each group is made by means of a "group index," which is a value calculated from an empirical formula. The group classification, including group index, should be useful in determining the relative quality of the soil material for use in earthwork structures, particularly embankments, sub-grades, sub-bases, and bases. However, for the detailed design of important structures, additional data concerning strength or performance characteristics of the soil under field conditions will usually be required.

2 Referenced Documents:

2.1 ***AASHTO:***

T 11 Materials Finer Than 75-µm (No. 200) Sieve in Aggregates by Washing
T 27 Sieve Analysis of Fine and Coarse Aggregates
T-88 Particle Size Analysis of Soils
M 145 Classification of Soil and Soil-Aggregate Mixtures for Highway Construction Purposes
T-146 Wet Preparation of Disturbed Soil Samples for Test

ASTM:

D 1140 Amount of Material in Soils Finer Than the No. 200 (75 µm) Sieve

MT Manual:

MT-200 Dry Preparation of Disturbed Soil and Soil Aggregate Samples for Test
MT-202 Sieve Analysis of Fine and Coarse Aggregates
MT-208 Determining the Plastic Limit and Plasticity Index of Soils
MT-208 Determining the Liquid Limit of Soils

Note 1 - Either AASHTO T 88, or T 11 and T 27, or ASTM D 1140 will be used to determine the particle size distribution of soils or soil-aggregate mixtures as a basis for classification.

3 Classification:

3.1 The classification is made by using the test limits and group index values shown in Table 1. If a more detailed classification is desired, a further subdivision of the groups shown in Table 1 may be made. An example of the classification with such subgroups as shown in Table 1 may be made. An example of the classification with such subgroups is shown in Table 2. The liquid limit and plasticity index ranges for the A-4, A-5, A-6, and A-7 soil groups are shown graphically in Figure 2.

3.2 *Classification Procedure* - With required test data available, proceed from left to right in Table 1 or Table 2 and the correct group will be found by process of elimination. The first group from the left into which the test data will fit is the correct classification. All limiting test values are shown as whole numbers. If fractional numbers appear on test reports, convert to nearest whole number for purposes of classification. Group index values should always be shown in parentheses after group symbol as: A-2(3), A-4(5), A-6(12), A-7-5(17), etc.

TABLE 1 – Classification of Soils and Soil-Aggregate Mixtures

General Classification	Granular Materials (35% or Less Passing No. 200)			Silt – Clay Materials (More than 35% Passing No. 200)			
Group Classification	A-1	A–3[a]	A-2	A-4	A-5	A-6	A-7
Sieve Analysis, percent passing:							
2.00 mm (No. 10)……..	…….	…….	…….	…….	…….	…….	…….
0.425 mm (No. 40)……	50 max.	51 min.	…….	…….	…….	…….	…….
0.075 mm (No. 200)……..	25 max.	10 max.	35 max.	36 min	36 min.	36 min.	36 min.
Characteristics of fraction passing No. 40							
Liquid Limit……..	…….	…….		40 max	41 min	40 max	41 min
Plasticity Index……	6 max	NP	*b*	10 max	10 max	11 min	11 min
General rating as subgrade	Excellent to Good			Fair to Poor			

a The placing of A-3 before A-2 is necessary in the "left to right elimination process" and does not indicate superiority of A-3 over A-2.
b See Table 2 for values.

TABLE 2 – Classification of Soils and Soil-Aggregate Mixtures

General Classification	Granular Materials (35% or Less Passing the 0.075)							Silt – Clay Materials (More than 35% Passing No. 200)			
Group Classification	A-1			A-2							A-7
	A-1-a	A-1-b	A-3	A-2-4	A-2-5	A-2-6	A-2-7	A-4	A-5	A-6	A-7-5 A-7-6
Sieve Analysis, percent passing:											
2.00 mm (No. 10)……..	50 max	…….	…….	…….	…….	…….	…….	…….	…….	…….	…….
0.425 mm (No. 40)……	30 max	50 max	51 min	…….	…….	…….	…….	…….	…….	…….	…….
0.075 mm (No. 200)……..	15 max	25 max	10 max	35 max	35 max	35 max	35 max	36 min	36 min	36 min	36 min
Characteristics of fraction passing No. 40											
Liquid Limit……..	…….		…….	40 max	41 min	40 max	41 min	40 max	41 min	40 max	41 min
Plasticity Index……	6 max		NP	10 max	10 max	11 min	11min	10 max	10 max	11 min	11min[a]
Usual types of significant constituent materials	Stone fragments, gravel and sand		Fine sand	Silty or clayey gravel and sand				Silty soils		Clayey soils	
General rating as subgrade	Excellent to Good							Fair to Poor			

a Plasticity index of A-7-5 subgroup is equal to or less than LL minus 30. Plasticity index of A-7-6 subgroup is greater than LL minus 30. (See figure 2.)

4 Definitions of Gravel, Sand, and Silt-Clay:

4.1 The terms "gravel," "coarse sand," and "silt-clay," as determinable from the minimum test data required in this classification arrangement, and as used in subsequent word descriptions, are defined as follows:

4.1.1 *Gravel* - Material passing sieve with 75 mm (3-in.) square openings and retained on the 2.00 mm (No. 10) sieve.

4.1.2 *Coarse Sand* - Material passing the 2.00 mm (No. 10) sieve and retained on the 0.425 mm (No. 40) sieve.

4.1.3 *Fine Sand* - Material passing the 0.425 mm (No. 40) sieve and retained on the 0.075 mm (No. 200) sieve.

4.1.4 *Silt Clay (combined silt and clay)* - Material passing the 0.075 mm (No. 200) sieve.

4.1.5 *Boulders and Cobbles* [retained on 75 mm (3 in.) sieve] should be excluded from the portion of the sample to which the classification is applied, but the percentage of such material, if any, in the sample should be recorded.

Note - The revised specification is identified as Interim Specification M 149.91 I.

4.1.6 The term "silty" is applied to fine material having plasticity index of 10 or less and the term "clayey" is applied to fine material having plasticity index of 11 or greater.

5 Description of Classification Groups:

5.1 *Granular Materials* - Containing 35 percent or less passing 0.075 mm (No. 200) sieve, Note 2.

5.1.1 *Group A-1* - The typical material of this group is a well-graded mixture of stone fragments or gravel, coarse sand, fine sand and a nonplastic or feebly plastic soil binder. However, this group includes also stone fragments, gravel, coarse sand, volcanic cinders, etc. without soil binder.

5.1.1.1 *Subgroup A-1-a* includes those materials consisting predominantly of stone fragments or gravel, either with or without a well-graded binder of fine material.

5.1.1.2 *Subgroup A-1-b* includes those materials consisting predominantly of coarse sand either with or without a well-graded soil binder.

5.1.2 *Group A-3* - The typical material of this group is fine beach sand or fine desert blow sand without silty or clay fines or with a very small amount of nonplastic silt. The group includes also stream-deposited mixtures of poorly-graded fine sand and limited amounts of coarse sand and gravel.

5.1.3 *Group A-2* - This group includes a wide variety of "granular" materials which are border-line between the materials falling in Groups A-1 and A-3 and silt-clay materials of Groups A-4, A-5, A-6, and A-7. It includes all materials containing 35 percent or less passing the 0.075 mm (No. 200) sieve which cannot be classified as A-1 or A-3, due to fines content or plasticity, or both, in excess of the limitations for those groups.

5.1.3.1 Subgroups A-2-4 and A-2-5 include various granular materials containing 35 percent or less passing the 0.075 mm (No. 200) sieve and with a minus 0.425 mm (No. 40) portion having the characteristics of the A-4 and A-5 groups. These groups include such materials as gravel and coarse sand with silt contents or plasticity indexes in excess of the limitations of Group A-1, and fine sand with nonplastic silt content in excess of the limitations of Group A-3.

5.1.3.2 Subgroups A-2-6 and A-2-7 include materials similar to those described under Subgroups A-2-4 and A-2-5, except that the fine portion contains plastic clay having the characteristics of the A-6 or A-7 group.

5 Description of Classification Groups: (continued)

Note 2 - Classification of materials in the various groups applies only to the fraction passing the 75 mm (3-in.) sieve. Therefore, any specifications regarding the use of A-1, A-2, or A-3 materials in construction should state whether boulders retained on the 75 mm (3-in.) sieve are permitted.

5.2 *Silt-Clay Materials* - Containing more than 35 percent passing the 0.075 mm (No. 200) sieve.

5.2.1 *Group A-4* - The typical material of this group is a nonplastic or moderately plastic silty soil usually having the 75 percent or more passing the 0.075 mm (No. 200) sieve. T he group includes also mixtures of fine silty soil and up to 64 percent of sand and gravel retained on 0.075 mm (No. 200) sieve.

5.2.2 *Group A-5* - The typical material of this group is similar to that described under Group A-4, except that it is usually of diatomaceous or micaeous character and may be highly elastic as indicated by the high liquid limit.

5.2.3 *Group A-6* - The typical material of this group is a plastic clay soil usually having 75 percent or more passing the 0.075 mm (No. 200) sieve. The group includes also mixtures of fine clayey soil and up to 64 percent of sand and gravel retained on the 0.075 mm (No. 200) sieve. Materials of this group usually have high volume change between wet and dry states.

5.2.4 *Group A-7* - The typical material of this group is similar to that described under Group A-6, except that it has the high liquid limits characteristic of the A-5 group and may be elastic as well as subject to high volume change.

5.2.4.1 Subgroup A-7-5 includes those materials with moderate plasticity indexes in relation to liquid limit and which may be highly elastic as well as subject to considerable volume change.

5.2.4.2 Subgroup A-7-6 includes those materials with high plasticity indexes in relation to liquid limit and which are subject to extremely high volume change.

Note 3 - Highly organic soils (peat or much) may be classified in an A-8 group. Classification of these materials is based on visual inspection, and is not dependent on percentage passing the 0.075 mm (No. 200) sieve, liquid limit or plasticity index. The material is composed primarily of partially decayed organic matter, generally has a fibrous texture, dark brown or black color and odor of decay. These organic materials are unsuitable for use in embankments and sub-grades. They are highly compressible and have low strength.

6 Group Index:

6.1 The group index is calculated from the following formula:

Group index = (F-35)[0.2 + 0.005(LL-40)] + 0.01(F-15)(PI-10),

in which,

F = percentage passing 0.075 mm (No. 200) sieve, expressed as a whole number. This percentage is based only on the material passing the 75 mm (3-in.) sieve.

LL = liquid limit

PI = plasticity index

6.1.1 When the calculated group index is negative, the group index shall be reported as zero (0).

6.1.2 The group index should be reported to the nearest whole number.

6.2 Figure 1 may be used in estimating the group index, by determining the partial group index due to liquid limit and that due to plasticity index, then obtaining the total of the two partial group indexes.

6 Group Index: (continued)

6.3 When calculating the group index of A-2-6 and A-2-7 subgroups, only the PI portion of the formula (or of Figure 1) shall be used.

6.4 The following are examples of calculations of the group index:

6.4.1 Assume that an A-6 material has 55 percent passing the 0.075 mm (No. 200) sieve, liquid limit of 40, and plasticity index of 25. Then,

Group = (55-35)[0.2 + 0.005(40-40)] + 0.01(55-15) (25-10) = 4.0 + 6.0 = 10

6.4.2 Assume that an A-7 material has 80 percent passing the 0.075 mm (No. 200) sieve, liquid limit of 90, and plasticity index of 50. Then,

Group index = (80-35)[0.2 + 0.005(90-40)] + 0.01 (80-15)(50-10) = 20.3 + 26.0, or 46.3

6.4.3 Assume that an A-4 material has 60 percent passing the 0.075 mm (No. 200) sieve, liquid limit of 25, and plasticity index of 1. Then,

Group index = (60-35)[0.2 + 0.005(25-40)] + 0.01 (60-15)(1-10) = 25 X (0.2 - 0.075) + 0.01(45)(-9) = 3.1 - 4.1 = 4.1 = - 1.0

Report as 0.

6.4.4 Assume that an A-2-7 material has 30 percent passing the 0.075 mm (No. 200) sieve, liquid limit of 50, and plasticity index of 30. Then,

Group index = 0.01(30-15)(30-10) = 3.0 or 3 (Note that only the PI portion of formula was used.)

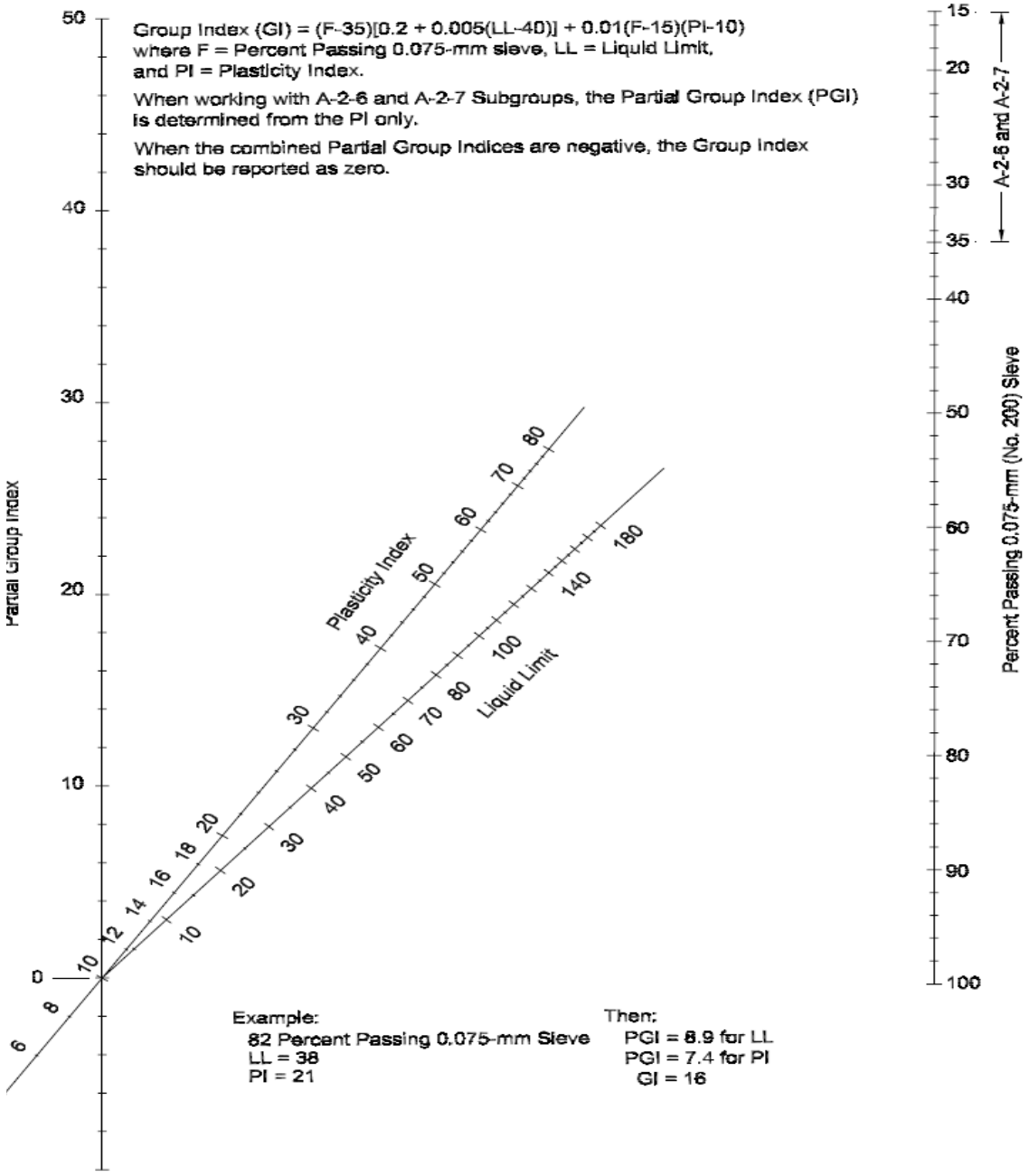

Figure 1 – Group Index Chart

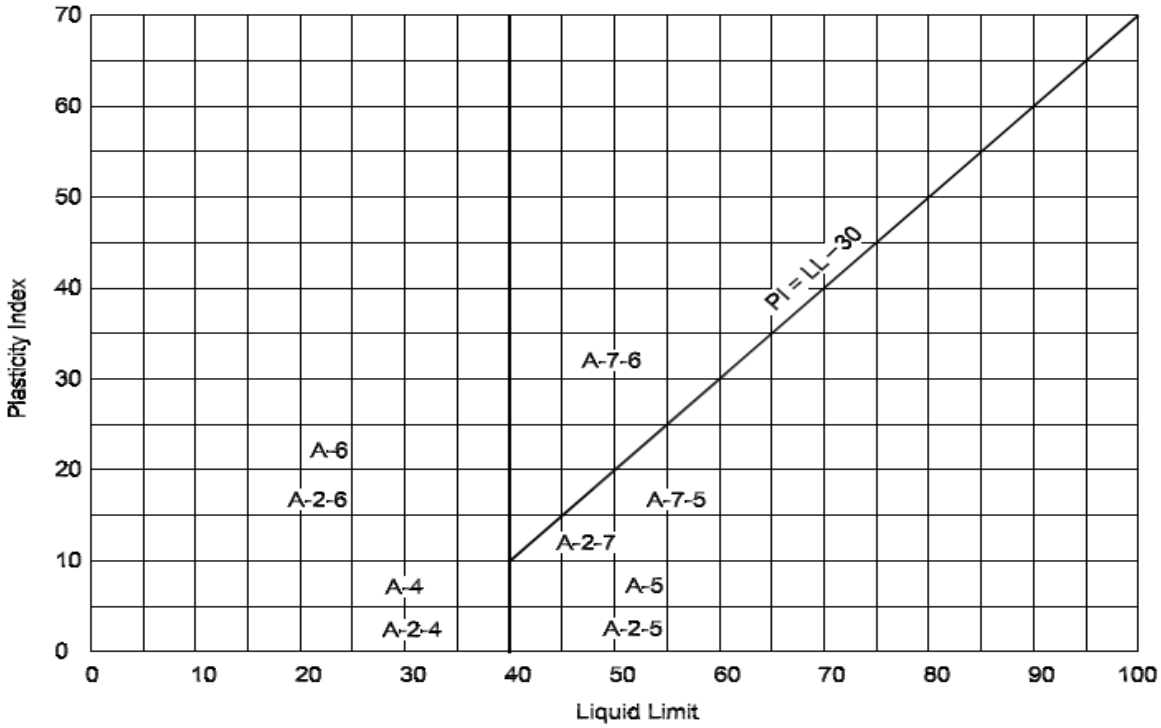

Note: A-2 Soils contain less than 35 percent finer than the 75-µm (No. 200) sieve.

Figure 2—Liquid Limit and Plasticity Index Ranges for Silt-Clay Materials

7 Basis for Group Index Formula:

7.1 The empirical group index formula devised for approximately within-group evaluation of the "clayey granular materials" and the "silt-clay materials" is based on the following assumptions:

7.1.1 Materials falling within Groups A-1-a, A-1-b, A-2-4, A-2-5, and A-3 are satisfactory as subgrade when properly drained and compacted under moderate thickness pavement (base and/or surface course) of a type suitable for the traffic to be carried, or can be made satisfactory by additions of small amounts of natural or artificial binders.

7.1.2 Materials falling within the "clayey granular" Groups A-2-6 and A-2-7 and the "silt-clay" Groups A-4, A-5, A-6, and A-7 will range in quality as sub-grade from the approximate equivalent of the good A-2-4 and A-2-5 sub-grades to fair and poor sub-grades requiring a l ayer of sub-base material or an increased thickness of base course over that required under 7.1.1 in order to furnish adequate support for traffic loads.

7.1.3 The assumed critical minimum percentage passing the 0.075 mm (No. 200) sieve is 35 neglecting plasticity, and 15 as affected by plasticity indexes greater than 10.

7.1.4 Liquid limits of 40 and above are assumed to be critical.

7.1.5 Plasticity indexes of 10 and above are assumed to be critical.

7.1.6 For soils that are non-plastic and when the liquid limit cannot be determined, the group index shall be considered zero (0).

7 Basis for Group Index Formula: (continued)

7.2 There is no upper limit of group index value obtained by use of the formula. The adopted critical values of percentage passing the 0.075 mm (No. 200) sieve, liquid limit and plasticity index, are based on an evaluation of sub-grade, sub-base and base course materials by several highway organizations that use the tests involved in this classification system.

7.3 Under average conditions of good drainage and thorough compaction, the supporting value of a material as sub-grade may be assumed as an inverse ratio to its group index, that is, a group index of 0 indicates a "good" sub-grade material and a group index of 20 or greater indicates a "very poor" sub-grade material.

METHODS OF SAMPLING AND TESTING
MT 216-13
METHOD OF SAMPLING AND TESTING CEMENT TREATED BASE
(Montana Test Method)

1 Scope:

1.1 This method covers procedures for making, curing, and testing cylindrical specimens from representative samples of Cement Treated Base (CTB).

2 Referenced Documents:

2.1 AASHTO:
T134 Moisture-Density Relations of Soil-Cement Mixtures
T 231 Capping Cylindrical Concrete Specimens

ASTM:
D1633 Standard Test Method for Compressive Strength of Molded Soil-Cement Cylinders

MT Manual:
MT 201 Sampling Roadway Materials
MT 203 Unit Weight of Aggregate
MT 211 Moisture Density Relations of Soil-Cement Mixtures
MT 212 Determination of Moisture and Density of In-Place Materials
MT 228 Method of Establishing Field Target Density for Cement Treated Base Density Control
MT 405 Wire Cloth Sieves for Testing Purposes
MT 601 Materials Sampling, Testing and Acceptance Guide

3 Apparatus:

3.1 *Molds* - Use solid-wall, metal cylinders manufactured with dimensions and capacities shown in 3.1.1. They must have a detachable collar assembly approximately 2.375 in. (60 mm) in height, to permit preparation of compacted specimens of soil-cement mixtures of the desired weight and volume. The mold and collar assembly must be constructed so that it can be fastened firmly to a detachable base plate made of the same material.

Note 1 - Alternate types of molds with capacities as stipulated herein may be used, provided the test results are correlated with those of the solid-wall mold on several soil types and the same moisture-density results are obtained. Records of such correlations shall be maintained and readily available for inspection when alternate types of molds are used.

3.1.1 A 4 in. (101.6 mm) mold having a capacity of 1/30 ± 0.0003 cu. ft. (943 ± 8 cm^3) with an internal diameter of 4.000 ± 0.016 in. (101.6 ± 0.41 mm) and a height of 4.584 ± 0.005 in. (116.43 ± 0.13 mm).

3.1.2 *Molds Out of Tolerance Due to Use* - A mold that fails to meet manufacturing tolerances after continued service may remain in use provided those tolerances are not exceeded by more than 50 percent; and the volume of the mold, calibrated in accordance with MT 203, Section 6 (Calibration of Measure), is used in the calculations.

Apparatus: (continued)

3.2 *Rammer:*

3.2.1 *Manually Operated* - Metal rammer having a flat circular face of 2.000 in. (50.8 mm) diameter, a manufacturing tolerance of ± 0.01 (0.25 mm) and weighing 5.50 ± 0.02 lb. (2.495 ± 0.009 kg). The in-service diameter of the flat circular face shall be not less than 1.985 in. (50.42 mm). Use a rammer equipped with a suitable guide-sleeve to control the height of drop to a free fall of 12.00 ± 0.06 in. (305 ± 2 mm) above the elevation of the soil.
The guide-sleeve must have at least 4 vent holes, no smaller than ⅜ in. (9.5 mm) diameter spaced approximately 90 degrees (1.57 radius) apart and approximately ¾ in. (19 mm) from each end, and provide sufficient clearance so the free fall of the rammer shaft and head is unrestricted.

3.2.2 *Mechanically Operated* - A metal rammer equipped with a device to control the height of drop to a free fall of 12.00 ± 0.06 in. (305 ± 2 mm) above the elevation of the soil and uniformly distributes such drops to the soil surface (Note 2). The rammer must have a flat circular face 2.000 in. (50.8 mm) diameter, a manufacturing tolerance of ± 0.01 (0.25 mm) and weighing 5.50 ± 0.02 lb. (2.495 ± 0.009 kg).

Note 2 – Calibrate the rammer apparatus with several soil-cement mixtures. Adjust the mass of the rammer, if necessary, to give the same moisture-density results as with the manually operated rammer. It may be impractical to adjust the mechanical apparatus so the free fall is 12 in. (305 mm) each time the rammer is dropped, as with the manually operated rammer. To make the adjustment of free fall, the portion of loose soil to receive the initial blow should be slightly compressed with the rammer to establish the point of impact from which the 12 in. (305 mm) drop is determined. Subsequent blows on the layer of soil-cement may all be applied by dropping the rammer from a height of 12 in. (305 mm) above the initial-setting elevation, or when the mechanical apparatus is designed with a height adjustment for each blow, all subsequent blows should have a rammer free fall of 12 in. (305 mm) measured from the elevation of the soil-cement as compacted by the previous blow.

3.2.3 *Rammer Face* – Use the circular face rammer. If necessary, use a sector face rammer as an alternative. Indicate the type of face used other than the 2 in. (50.8 mm) circular face in the report. The alternate must have an area equal to that of the circular face rammer.

3.3 *Sample Extruder* - A jack, lever, frame, or other device adopted for the purpose of extruding compacted specimens from the mold.

3.4 *Balances and Scales* - A balance or scale of at least 25 lb. (11.5 kg) capacity having sensitivity and readability to 0.01 lb. (5 grams). Also, a balance of at least 3 lb. (1 kg) capacity having sensitivity and readability to 0.003 oz. (0.1 gram). Use balances or scales of the same units shown in the contract.

3.5 *Heat Source* - Oven, hot plate or alternate heating source.

3.6 *Straightedge* - A hardened steel straightedge at least 10 in. (254 mm) in length. Use a straightedge with one beveled edge. At least one longitudinal surface (used for final trimming) must be plane within 0.01 in. per 10 in. (0.25 mm per 250 mm) (0.1 percent) of length within the portion used for trimming the soil. (Note 3)

Note 3 -The beveled edge may be used for final trimming if the edge is true within a tolerance of 0.01 in. per 10 in. (0.25 mm per 250 mm) *(0.1 percent) of length; however, with continued use, the cutting edge may become excessively worn and not suitable for trimming the soil to the level of the mold. The straightedge should not be so flexible that trimming the soil surface with the cutting edge will concave the soil surface.*

Apparatus: (continued)

3.7 *Sieves* – 2 in. (50 mm), ¾ in. (19.0 mm), No. 4 (4.75 mm) sieves conforming to the requirements of MT 405.

3.8 *Mixing Tools* - Miscellaneous tools such as mixing pan, spoon, trowel, spatula, etc., or a suitable mechanical device for thoroughly mixing the sample of soil with increments of water.

3.9 *Container* - A flat, round pan for moisture absorption by soil-cement mixtures about 12 in. (305 mm) in diameter and 2 in. (50 mm) deep.

3.10 *Moisture Containers* - Suitable containers made of material resistant to corrosion and not subject to change in weight or disintegration on repeated heating and cooling. Use containers with close-fitting lids to prevent loss of moisture from samples before initial weighing and to prevent absorption of moisture from the atmosphere following drying and before final weighing. One container is needed for each moisture content determination.

3.11 *Butcher Knife* - A butcher knife approximately 10 in. (250 mm) in length, for trimming the top of the specimens.

4 CTB Mix Design:

4.1 Verify that the contractor has submitted a cement treated base mix design to the Materials Bureau at least 10 business days before scheduled placement. Confirm with the Materials Bureau that the design is approved for use before allowing placement on the project.

5 Acceptance:

5.1 *In-Place Densities* - Test for compaction in accordance with Subsection 304.03.5. Determine in-place densities in accordance with MT 212. Establish a corrected moisture curve by correcting the nuclear moisture reading to oven-dry moisture contents.

5.2 *Field-Made Compression Specimens* – Mold a minimum of one set of compressive strength specimens for every 750 cubic yards (550 cubic meters) of CTB in accordance with MT 601. A set consists of three compressive strength specimens molded in accordance with Section 6 of this procedure. It is desirable that these specimens represent the material placed at the locations of the in-place densities so moisture-density comparisons can be made. Two specimens from each set will be tested at 7 days to determine strength acceptance. The remaining specimens will be broken at 28 days to identify strength gain. A copy of the sample record containing moisture content, cementitious material content, and density must accompany each set of compressive strength specimens in the shipping boxes.

5.3 *Acceptance Samples of Aggregate* - Sample for gradation analysis in accordance with Subsection 304.03.1.

6 Molding Specimens in the Field:

6.1 Sample the CTB mixture placed on the roadway from a representative location in accordance with MT 201. Obtain approximately one cubic foot of material and place in suitable container(s) lined with a plastic bag. Once the sample is complete, close the bag and place a lid on the container(s). This is done to reduce any possibility of moisture loss from the sample. Transport the sample to the place of molding as quickly as possible in order to minimize hydration (excessive hydration can reduce the lubrication properties and result in less than maximum density and therefore lower strengths). Remix the sample before and during molding to ensure uniformity and prevent segregation.

Molding Specimens in the Field: (continued)

6.2 Immediately form a specimen by compacting the mixture in the mold in accordance with MT 211, Section 5.2 (with the collar attached). Trim the specimen in accordance with MT 211, Section 7.2. Uniformly distribute the material by spading along the inside of the mold with a spatula for each lift placed in the mold and before compaction. After compaction of each lift, scarify or roughen the top of the layer in order to obtain a good bond between lifts.

6.3 During compaction, obtain a representative sample of the mixture, weighing not less than 500 grams. Weigh the sample immediately and dry until further drying does not alter the weight greater than 0.1 percent, constant mass. Determine the moisture content as a check against design moisture content.

6.4 Weigh the compacted specimen to check against design density before beginning the initial cure. (Note 4)

Note 4 - Once the specimen has been struck off to the required smoothness and weighed, cover the top of the mold with plastic and place the compaction collar back on the mold, leaving the plastic in place. Tighten the collar so that the plastic will make an airtight seal around the rim of the mold and the surface of the specimen. This is done to prevent moisture loss from the specimen during the initial cure. Once all specimens have been molded and sealed with plastic, place in a cure box to protect the specimens from temperature extremes and from direct sunlight. Maintain a temperature range of 60° F to 80° F during the initial cure in the field. The location for the initial cure must be horizontally level, rigid, and free from vibration or other disturbances.

6.5 Maintain a running average of densities and moistures in accordance with MT 228 to establish density control.

6.6 Form two additional specimens in the same manner as the first as rapidly as possible. Identify two specimens as 7-day compression specimens, and the third as a 28-day compression specimen. (Note 5)

Note 5 - A satisfactory method of identifying the specimens for the 7-day or 28-day breaks is to wrap a piece of masking tape around the specimen. Indicate on the masking tape the date made, stationing & lane, type of test, etc.

6.7 Cure the compacted specimens in the molds a minimum of 24 hours. Extract the specimens from the molds, place in the shipping box packed in damp sawdust, and transport to the Materials Bureau as soon as possible so that the final cure can be accomplished in the moist cure room for the remainder of the curing period.

7 Compressive Strength Determination:

7.1 Determine the diameter using two diameter measurements to the nearest 0.01 inches (0.25 mm) taken at 90 degrees to one another near mid height of the specimen. Prior to placing compressive strength specimens in the compression machine, verify that both ends of the specimen are plane to within 0.002 in (0.05 mm). If an end of the specimen is outside of the 0.002 in. (0.05 mm) tolerance, cap that end of the specimen in accordance with AASHTO T 231.

7.2 Determine the 7 day unconfined compressive strength in accordance with ASTM D1633 except as modified herein. Omit the requirement for immersing cured specimens in water for 4 hours prior to testing.

7.3 Maintain free moisture on the outsides of specimens to prevent drying until testing is complete (except for the ends of the specimens when sulfur capping). When capping with sulfur, be certain that the ends of the specimen are dry enough to prevent small pockets of steam from forming within the capping compound.

8 Calculation:

8.1 Calculate the unit compressive strength of the specimen by dividing the maximum load by the cross-sectional area.

$$S = \frac{lbf}{\pi r^2}$$

Where:
S = Strength
lbf = Maximum Load
r = Radius of Specimen

8.2 For purposes of this method, determine strength of specimens using a height (uncapped) divided by diameter ratio of 1.15. This is standard and is not to be corrected by a length to diameter correction factor.

9 Report:

9.1 The field technician is to report the following:

Sample Date the cylinder was made
Percent cement rounded to the nearest tenth
Percent fly ash rounded to the nearest tenth
Depth of material placed rounded to the nearest tenth of a ft (m)
Station where sample was taken
Density rounded to the nearest tenth of lbs per ft^3 (kg per m^3)
Moisture content rounded to the nearest tenth of a percent

9.2 The lab technician is to report the following:

Date the cylinder was broken
Diameter of the cylinder rounded to the nearest hundredth of an inch (mm)
Load rounded to the whole number in lbs per ft (kg per m)
Compressive strength rounded to the nearest whole number in lbs per in^2 (MPa)

Report the average strength of the two 7-day cylinders rounded to the nearest whole number.

METHODS OF SAMPLING AND TESTING
MT 217-04
METHOD OF TEST FOR DETERMINING PERCENTAGE OF MECHANICALLY FRACTURED PARTICLES

1 Scope:

1.1 This test method covers the determination of the percentage, by mass or by count, of a coarse aggregate sample that consists of fractured particles meeting specified requirements.

1.2 The values stated in SI units are to be regarded as the standard. The values in parentheses are provided for information only.

2 Referenced Documents:

2.1 ***ASTM:***

D 5821 Standard Test Method for Determining the Percentage of Fractured Particles in Coarse Aggregate

MT Manual:

MT 201 Sampling Roadway Materials
MT 202 Sieve Analysis for Coarse and Fine Aggregate
MT 405 Wire Cloth Sieves for Testing Purposes
MT 607 Procedure for Reducing Field Samples to Testing Size

WAQTC:

TM-1 Determining the Percentage of Fractured Particles in Coarse Aggregate

3 Terminology:

3.1 *Fractured face, n* – an angular, rough, or broken surface of an aggregate particle created by crushing, by other artificial means, or by nature.

3.2 *Discussion* – for this standard, a face will be considered a "fractured face" only if it has a projected area at least as large as one quarter of the maximum projected area (maximum cross-sectional area) of the particle and the face has sharp and well-defined edges; this excludes small nicks

3.3 *Fractured particle, n* – a particle of aggregate having at least the minimum number of fractured faced specified (usually one or two).

3.4 *Nominal Maximum Size* – One sieve size larger than the first sieve to retain more than 10 percent.

4 Significance and Use:

4.1 Some specifications contain requirements relating to percentage of fractured particles in coarse aggregates. One purpose of such requirements is to maximize shear strength by increasing inter-particle friction in either bound or unbound aggregate mixtures. Another purpose is to provide stability for surface treatment aggregates and to provide increased friction and texture for aggregates used in pavement surface courses. This test method provides a standard procedure for determining the acceptability of coarse aggregate with respect to such requirements.

4 Significance and Use: (continued)

4.2 Specifications differ as to the number of fractured faces required on a fractured particle, and they also differ as to whether percentage by mass or percentage by particle count shall be used. If the specification does not specify, use the criterion of at least one fractured face and calculate percentage by mass.

5 Apparatus:

5.1 *Balance* - A balance or scale accurate and readable to within 0.1% of the test sample mass at any point within the range of use.

5.2 *Sieves* - Sieves shall be of the woven wire type with square openings and shall conform to MT 405.

5.3 *Splitter* – A sample splitter suitable for dividing field samples into test portion sizes according to MT 607.

5.4 *Spatula* - A spatula or similar tool to aid in sorting aggregate particles.

6 Sampling:

6.1 Sample and reduce the aggregate in accordance with MT 201 and MT 607.

7 Sample Preparation:

7.1 Dry the sample sufficiently to obtain a clean separation of fine and coarse material in the sieving operation. Sieve the sample in accordance with MT 202 over the 4.75 mm (No. 4) sieve, or other specified sieve for retaining material for this test, and reduce the portion retained on the sieve using a splitter in accordance with MT 607 to the appropriate size for test. This test size should be slightly larger than shown in Table 1 to account for loss of fines through washing, if necessary.

Note - When individual sieve fracture determination is required, such as in the Special Provisions for a Grade "S" mix design, the test sample size will be determined using Table 2.

7.2 For aggregate with a nominal maximum size of 19.0 mm (3/4 in.) or larger, where the fracture particle content is to be determined for material retained on the 4.75 mm (No. 4) or smaller sieve, the test sample may be separated on the 9.5 mm (3/8 in.) sieve. The portion passing the 9.5 mm (3/8 in.) sieve may then be further reduced, in accordance with MT 607, to a minimum of 200 g (0.5 lbs.). This will reduce the number of particles to be separated during the procedure. In this case, percent fractured particles is determined on each portion; and a weighted average of fractured particles is calculated based on the mass of each of the portions to reflect the total percentage of fractured particles in the entire sample.

Combined Fracture Determination
TABLE 1

Nominal Maximum Size Square Openings, mm (in.)	Minimum Test Sample Mass, grams (Approx. lb.)
4.75 (No.4)	200 (0.4)
9.5 (3/8)	400 (0.9)
12.5 (1/2)	700 (1.5)
19.0 (3/4)	1,000 (2.5)
25.0 (1)	1,500 (3.5)
37.5 (11/2)	2,500 (6)
50.0 (2)	4,000 (8.8)
63.0 (21/2)	7,500 (16.5)
75.0 (3)	10,000 (27)
90.0 (31/2)	15,000 (33)

Note - Nominal maximum size is one sieve size larger than the first sieve to retain more than 10 percent of the material.

Individual Sieve Fracture Determination
TABLE 2

Nominal Maximum Size Square Openings, mm (in.)	Minimum Test Sample Mass, grams (Approx. lb.)
2.00 (No.10)	25 (0.1)
2.36 (No.8)	25 (0.1)
4.75 (No.4)	100 (0.4)
6.3 (¼)	100 (0.2)
9.5 (3/8)	200 (0.5)
12.5 (1/2)	300 (0.7)
16.0 (5/8)	500 (1)
19.0 (3/4)	700 (1.5)
25.0 (1)	1,000 (2.2)
31.5 (11/4)	1,500 (3.5)

8 Procedure:

8.1 Wash the sample, when necessary, over the sieve designated for determination of fractured particles to remove any remaining fine material, and dry to a constant mass in accordance with MT 202. Determine the mass of the test sample, and any subsequent determination of mass, to the nearest 0.1% of the original dry sample mass.

8.2 Spread the dried test sample on a clean flat surface large enough to permit careful inspection of each particle. To verify that a particle meets the criteria, hold the aggregate particle so that the face is viewed directly. If the face constitutes at least one quarter of the maximum cross sectional area of the rock particle, consider it a fractured face.

8.3 Using the spatula or similar tool, separate the test sample into three categories: (1) fractured particle based on whether the particle has the required number of fractured faces, (2) particles not meeting the specified criteria, and (3) questionable or borderline particles. If the required number of fractured faces is not given in the applicable specifications, the determination will be made on the basis of a minimum of one fractured face.

8 Procedure: (continued)

8.4 To aid in making the fracture determination, separate the sample into three categories. Determine the mass or count of particle in the fractured particle category, the mass or count of the questionable particles, and the mass or count of the particle not meeting the specified fracture criteria. Use mass to calculate percent fractured particles unless percentage by particle count is specified.

8.5 If more than one number of fractured faces is specified (for example, 90% with one or more fractured faces and 60% with two or more fractured faces), repeat the procedure on the same sample for each requirement.

8.6 If on any of the determinations, more than 15% of the total is placed in the questionable pile, repeat the determination until no more than 15% is present in that category. Use percent based on mass for this determination unless percent by particle count is specified. Also, if the sample has been divided into two test portions, the 15% criteria shall apply to each.

9 Report:

9.1 Report the mass percentage of fractured faces to the nearest 1% in accordance with the following:

$P = [F + Q/2)/(F + Q + N)] \times 100$

P = percentage of particle with the specified number of fractured faces,

F = mass or, count of fractured particles with at least the specified number of fractured faces,

Q = mass of count of particles in the questionable or borderline category, and

N = mass or count of particles in the uncrushed category not meeting the fractured particle criteria.

Example:

F = 632.6 g, Q = 97.6 g, N = 352.3 g

$P = [(632.6\text{ g} + 97.6\text{ g}/2)/(632.6\text{ g} + 97.6\text{ g} + 352.3\text{ g})] \times 100 = 62.9\%$

9.2 Report the specified fracture criteria against which the sample was evaluated.

9.3 Report the total mass in grams of the coarse aggregate sample tested.

9.4 Report the sieve on which the test sample was retained at the start of the test.

9.5 Report whether the percentage of fractured particles was determined by mass or by particle count.

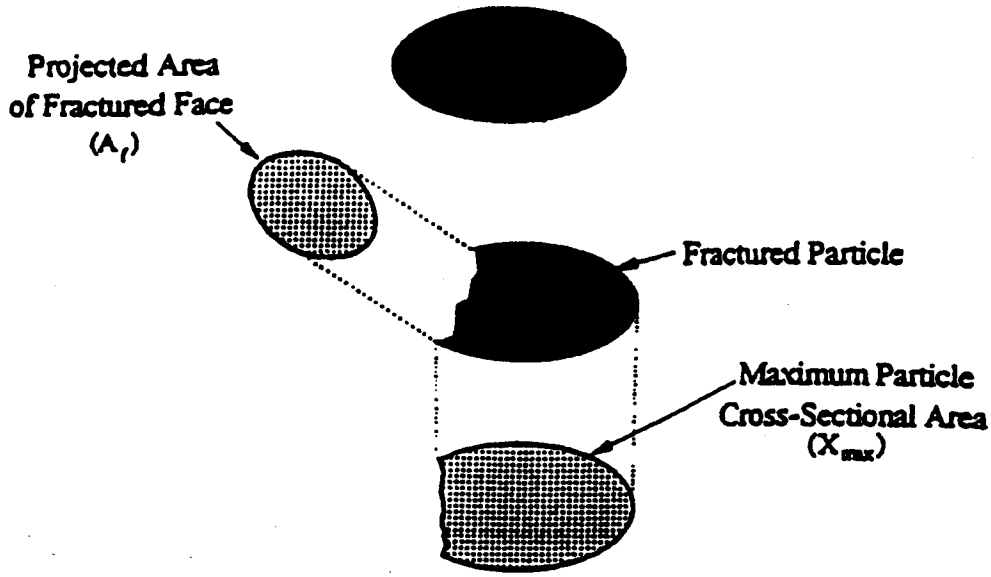

A face will be considered a "Fractured Face" only if it has : $A_f \geq 0.25\ X_{max}$

FIG. 1 Schematic of a Fractured Particle with One Fractured Face

Fig. 1 reprinted with the permission of the American Society for Testing Materials

METHODS OF SAMPLING AND TESTING
MT 218-04
METHOD OF TEST FOR
DETERMINING RELATIVE COMPACTION AND PERCENT MOISTURE
(Montana Test Method)

1 Scope:

1.1 This procedure is intended as a guide for comparing in-place moisture and density to optimum moisture and maximum density, respectively, in order to determine compliance with standard specifications and contract special provisions.

2 Referenced Documents:

2.1 ***MT Manual:***
MT-210 Moisture-Density Relations of Soils Using a 5.5 lb. Rammer
MT-212 Determination of Moisture and Density of In-Place Materials
MT-230 Moisture-Density Relations of Soils Using a 10 lb. Rammer

3 In-Place Moisture and Density:

3.1 The in-place moisture and density shall be determined in accordance with MT-212.

4 Optimum Moisture and Maximum Density:

4.1 The optimum moisture and maximum density shall be determined in accordance with MT-210 or MT-230, Method A, B, C, or D, whichever is applicable, using the following criteria as a guide.

4.2 When the material under test is a soil or aggregate consisting of entirely minus 4 mesh (4.75 mm), Method A or B will be used.

4.3 When the material under test is a soil or aggregate with a maximum size of 3/4 inch (19.0) mm), Method C or D will be used.

4.4 When the material under test is a soil or aggregate with a maximum size of 2 inches (50 mm), Method D will be used.

4.5 When the material under test is a soil or aggregate with a maximum size of 4 inches (100 mm) and no more than 50% of the material under test is retained on the 4 mesh (4.75 mm), Method D will be used.

4.6 When the material under test is a soil or aggregate with a maximum size larger than 2 inches (50 mm) and more than 50% of the material under test is retained on the 4 mesh (4.75 mm), the material will not be required to meet 95% density within 2% optimum moisture.

4.6.1 A screen analysis must be provided on representative samples from each lift of the embankment area to prove that more than 50% of the material is retained on the 4 mesh (4.75 mm) sieve.

4.6.2 Nuclear M/D readings must be taken on each lift in the embankment area to demonstrate that uniform relative density has been achieved.

4.6.3 Notes must be made on the Summary of Compaction Data (Form 1006) showing the results obtained in paragraphs 4.1.5.1 and 4.1.5.2.

5 Calculation:

5.1 Determine the relative compaction by dividing the in-place density (pounds per cubic foot) by the maximum density (pounds per cubic foot) and multiplying by 100.

5.2 A direct comparison of the in-place moisture and the optimum moisture will determine compliance with specifications.

6 Family of Curves:

6.1 A "family of curves" is a term applied to a number of moisture-density curves which are plotted on one cross-section sheet, using the same ordinates and abscissas as dry weights pounds per cubic foot and moisture contents, respectively. The family of curves is plotted, initially, from values obtained by the sampling and testing of the various soil types during the Preconstruction Soils Survey and every effort must be made to sample and identify all of the various soil types that will be encountered on the project. Each new soil type, or mixture of soils, encountered on the project during construction, will be represented by a moisture-density curve, which is added to the "family".

Note 1 – New curves drawn through plotted one-point determinations shall not become a permanent part of the family of curves until verified by a full moisture-density relationship.

7 One Point Proctors:

7.1 A "one point Proctor" is an abbreviated standard Proctor compaction test and is used in conjunction with the family of curves. Rather than determining the moisture and density points for an entire curve, a single point is determined for the purpose of selecting the curve, which represents the soil being compacted, from the family of curves.

7.1.1 One-point Proctors shall be run whenever there is any doubt that the soil being compacted is from a location on the project, which is represented, by one of the curves in the family of curves.

7.1.2 Frequently soils may be mixed by heavy equipment excavating and hauling to the embankment site and a one-point Proctor may not fit any of the established curves. In these cases a new curve will have to be prepared from the mixture and added to the family of curves.

7.1.3 It is necessary to run the one-point Proctor as close to optimum moisture as possible. The point should be within plus or minus three percent of optimum on most curves and within plus or minus two percent of optimum on sharp breaking curves. If the point is established on either side of optimum and some distance from the peak of the curve, it may very well fit more than one curve in the family of curves, or none at all and it will be impossible to select the proper curve.

7.1.4 The moisture and density results obtained by the one-point Proctor are plotted on the family of curves and, when obtained near optimum, will fall near one of the curves in the family of curves, provided that particular type of soil or mixture of soils has been tested for optimum moisture and maximum density. The peak of the curve selected shall be considered the optimum moisture and maximum density of the material represented by the one-point Proctor.

Note 2 – If the one-point plotted within or on the family of curves does not fall in the 80 to 100 percent of optimum moisture range, compact another specimen, using the same material, at an adjusted moisture content that will place the one-point within this range.

8 Numbering Check Samples:

When a check sample is taken it will be assigned the same number as the sample being checked, with the addition of a letter suffix. For example, if sample number 38 failed to meet specifications, the first check sample would be numbered 38-A, the second check sample would be 38-B.

METHODS OF SAMPLING AND TESTING
MT 219-04
METHOD OF TEST FOR
CONTROLLING THE COMPACTION OF SURFACING AGGREGATES
AND PLANT MIX PAVING
USING A CONTROL-STRIP TEST-SECTION TECHNIQUE WITH NUCLEAR GAUGES
(Montana Test Method)

1 Scope:

1.1 This test method is intended to control the density of compacted courses of surfacing aggregates and plant mix pavement using nuclear gauges.

2 Referenced Documents:

2.1 ***MT Manual:***
MT-212 Determination of Moisture and Density of In-Place Materials
MT-230 Moisture-Density Relations of Soils using a 10 lb. Rammer
MT-311 Marshall Method for Field Control of Hot Mix Asphalt Paving

3 Definitions:

3.1 *Control-Strip A - Surfacing Aggregates* - A section approximately three hundred (300) feet long by the typical section width of two lanes on a firm sub-grade.

3.2 *Control-Strip B - Plant Mix Paving* - A section approximately three hundred (300) feet long by one paver width on a firmly compacted base. Please refer to table 1 on page 4 as a guide for maximum rolling times.

3.3 *Test-Section Surfacing Aggregates* - Individual sections each approximately two thousand (2000) feet long, as constructed, on which the surfacing aggregates will be placed, using the same layer thickness, compaction watering and procedures used in constructing the Control-strip A above.

3.4 *Test-Section Plant Mix Paving* - Individual sections each approximately two thousand (2000) feet long by one paver width on which plant mix material will be placed, using the same layer thickness, compaction and procedure used in construction the Control-strip B above.

4 Equipment:

4.1 Nuclear Moisture/Density Gauges - Refer to MT-212 of the Materials Manual for a description of the various types of devices.

5 Operational Procedures:

5.1 *Control-Strip Surfacing Aggregates* - At the beginning of compaction operations, the density requirements shall be determined by compacting a Control-Strip of an approved thickness. The procedure, MT-230 (Proctor Test) establishes the dry density for aggregates being used in the Control-strip. (Note 1)

Note 1 - The moisture-density of the control strip will be determined by the use of approved nuclear equipment under field conditions.

5.1.1 After each application of the roller, wet density and moisture determinations are made with the Nuclear device at a minimum of three (3) random locations. These locations may be marked with a small quantity of minus 30 mesh dry sand - the finer the better. This sand should be screened from the material that is being compacted and dried to constant weight. This sand serves to

5 Operational Procedures: (continued)

identify each test location and is an aid for seating the Nuclear device to preclude air voids between the bottom surface of the probe and the coarser aggregate particles that may be extruding above the surface of the lift. To avoid any errors in reading due to the build-up of sand beneath the Nuclear device, approximately the same quantity of sand is used at each of the three test locations. The test locations are marked so that the same locations are tested after each pass.

5.1.2 An average dry density is computed and plotted on a chart of dry density versus the number of roller passes. Rolling is discontinued when the curve plotted for dry density versus roller passes levels off. When the density plot levels off, density and moisture readings are taken at seven additional locations. Ten test sites in the 300 feet long Control-Strip are calculated to yield satisfactory statistical results. The average dry density is computed from the ten sets of readings and this serves as the standard of compaction. A new Control-Strip is required when the aggregate characteristics change appreciably, the aggregate is produced from a different source, or there has been a change in the rolling equipment or procedures used. Each new lift will require a new Control-Strip to determine if there is any change in Control-Strip density. If a different Nuclear device is used, a new Control-Strip might have to be established.

5.2 *Test-Sections Surfacing Aggregates* - The remainder of the project is divided into Test-Sections described above. After placing and compacting a lift of surfacing aggregate, employing the same thickness and procedures used in the Control-Strip, moisture and density readings are taken at ten randomly selected locations. Dry density determinations are made for each set of readings.

5.2.1 Whenever the minimum density results are not met, immediate corrective action must be taken by additional rolling or additional water and rolling. The densities of the completed Test-Sections must be determined without delay for applicable comparison (under the same conditions) with the Control-Strip density. (Note 2) Similarly, proper use of the most suitable roller can decrease time in attaining proper density in the Test-Section. The contractor should be encouraged to use various methods in establishing density in the Control-Strip.

Note 2 - (Not a specification requirement) The effective use of water and the method used in compacting the Control-Strip can influence the time and the compactive effort required to attain satisfactory density.

5.3 *Control Strip Plant Mix Paving* - All roller equipment will be approved by the engineer prior to the construction of the Control-Strip as specified in the Standard Specification. Whenever a Control-Strip is required on plant mix surfacing a comparison will be made between the established Control-Strip density and the Marshall density as determined by MT-311 (Marshall Method of Hot Mix Asphalt Paving). This should be done to ensure a reasonable Control-Strip density is established.

5.3.1 Three test sites will be randomly selected on the Control-Strip. Each site will be marked with minus 30 mesh dry seating sand used to seat the Nuclear gauge. This sand should be screened from the material that is being compacted and dried to constant weight. Compaction of the Control-Strip shall commence as soon as possible after placement of the bituminous mixture and be uniform over the entire Control-Strip before the temperature of the mix falls below 175 F. A test will be taken on each test site with a Nuclear gauge after each pass of the compaction equipment.

5.3.2 This procedure will continue until the density increase is less than one (1) pound per cubic foot at a temperature greater than 175 F. After completion of the rolling, then two more tests sites are established so that a total of five density tests are averaged for the Control-Strip density.

5.3.3 Each new lift will require a new Control-Strip to determine if there is any change in Control-Strip density. If a different Nuclear device is used, a new Control-Strip might have to be established.

5 Operational Procedures: (continued)

5.4 *Test Section Plant Mix Paving* - The remainder of the project is divided into 2000 ft. test sections. After placing and compacting a lift of Plant Mix Paving, employing the same thickness and procedures used in the Control-Strip, density readings are taken at five randomly selected locations. The average density of each test section will be evaluated based upon the results of five tests in each test section. Whenever the minimum density results are not met, immediate corrective action must be taken by additional rolling. The densities of the completed test sections must be determined without delay for applicable comparison (under the same conditions) with the Control-Strip density.

6 Forms and Reports:

6.1 The attached Lab. Form No. 1000-A is used for controlling the compaction of surfacing aggregates. This form may also be used for Control Strip paving.

6.2 Lab. Form No. 1006-A, Summary of Compaction Data for Surfacing, is applicable for all types of Nuclear devices. It is requested that the serial number of the device being used and the Laboratory Number of each pit, be entered on this form.

TABLE 1*

MAXIMUM AVAILABLE ROLLING TIMES

Recommended Minimum Laydown Temperature

Mat Thickness

Base Temp.ºF	½"	3/4"	1"	1-1/2"	2"	3" and Greater
+35-40	-	-	-	305	295	280
+40-50	-	-	310	300	285	275
+50-60	-	310	300	295	280	270
+60-70	310	300	290	285	275	265
+70-80	300	290	285	280	270	265
+80-90	290	280	275	270	265	260
+90	280	275	270	265	260	255
Maximum Available Rolling time, minutes.	4	6	8	12	15	15

* Table from Superintendents Manual on Compaction of Hot Mix Asphalt Pavement

As an example: to illustrate the use of the table, assume we are placing a 1½" thick mat and the base temperature is between 50ºF and 60ºF. A laydown temperature of 295ºF is needed to provide 12 minutes before the mat cools to an average temperature of 175ºF. If it is a warmer day, with a base temperature of 70ºF to 80ºF, a laydown temperature of 280ºF would provide 12 minutes of rolling time. On a day warm enough to have a base temp of 70ºF to 80ºF, the air temperature would probably be above 40ºF and there would be some sunshine, so it would probably take 2 or 3 more minutes to cool to 175ºF, probably 15 minutes.

Where dashes appear in the table, conditions are such that it is doubtful that specification density can be achieved so work would cease. The table has come to be known as "cessation requirements."

MBF Form No. 1000-A
Q:\MT-STD\F1000-A.doc

Revised 7/7/2000

Control Strip Density

Gauge Serial No. _____

Project No._____ Control Strip No._____ Type of Material_____ Pit No._____

Test Site Number	Density Ref. Standard Count	Moisture Ref. Standard Count	Backscatter Count	Direct Tran. Count and Depth	Moisture Wet Density	Location	Distance Left or Right of Centerline	☐ PCF ☐ Kg/cu. m	Percent Moisture	Dry Density
1										
2										
3										
1										
2										
3										
1										
2										
3										
1										
2										
3										
1										
2										
3										
1										
2										
3										
4										
5										
6										
7										
8										
9										
10										
							TOTAL			
							AVERAGE			

Density as determined by this control strip_____ x .98 =_____ (Mean density requirement)
Density as determined by this control strip_____ x .95 =_____ (Individual density requirement)
Remarks:

METHODS OF SAMPLING AND TESTING
MT 220-04
SPECIFIC GRAVITY OF SOILS
(*Modified AASHTO T 100*)

1 Scope

1.1 This method covers determination of the specific gravity of soils by means of a pycnometer. When the soil is composed of particles larger than the 4.75 mm (No. 4) sieve, the method outlined in MT 205 Specific Gravity and Absorption of Coarse Aggregate shall be followed. When the soil is composed of particles both larger and smaller than the 4.75 mm sieve, the sample shall be separated on the 4.75 mm sieve and the appropriate test method used on each portion. The specific gravity value for the soil shall be the weighted average of the two values (See Note 1). When the specific gravity value is to be used in calculations in connection with the hydrometer portion of AASHTO T 88, Particle-Size Analysis of Soils, it is intended that the specific gravity test be made on that portion of the soil that passes the 2.00 mm (No. 10) sieve.

1.2 The following applies to all specified limits in this standard: For the purposes of determining conformance with these specifications, an observed value or a calculated value shall be rounded off "to the nearest unit" in the last right-hand place of figures used in expressing the limiting value.

Note 1 – The weighted average specific gravity should be calculated using the following equation:

$$G_{avg} = \frac{1}{\frac{R_1}{100G_1} + \frac{P_1}{100G_2}}$$

where:

G_{avg} = weighted average specific gravity of soils composed of particles larger and smaller than the 4.75 mm (No. 4) sieve,

R_1 = percent of soil particles retained on the 4.75 mm sieve,

P_1 = percent of soil particles passing the 4.75 mm sieve,

G_1 = apparent specific gravity of soil particles retained on the 4.75 mm sieve as determined by MT 205, and

G_2 = specific gravity of soil particles passing the 4.75 mm sieve as determined by this test method.

1.3 The values stated in acceptable metric units are to be regarded as the standard.

1.4 This standard may involve hazardous materials, operations, and equipment. This standard does not purport to address all of the safety problems associated with its use. It is the responsibility of whoever uses this standard to consult and establish appropriate safety and health practices and determine the applicability of regulatory limitations prior to use.

2 Referenced Documents

AASHTO
T 2 Sampling Aggregates
T 88 Particle Size Analysis of Soils
T 100 Specific Gravity of Soils

ASTM
C670 Practice for Preparing Precision Statements for Test Methods for Construction Materials
E12 Definition of Terms Relating to Density and Specific Gravity of Solids, Liquids, and Gases

MT Materials Manual
MT 200 Dry Preparation of Disturbed Soil and Soil Aggregate Samples for Tests
MT 205 Specific Gravity and Absorption of Coarse Aggregate
MT 405 Wire Cloth Sieves for Testing Purposes
MT 607 Reducing Field Samples of Aggregate to Testing Size

3 Terminology

3.1 Definitions

3.1.1 *Specific Gravity* – the ratio of the mass in air of a given volume of a material at a stated temperature to the mass in air of the same volume of gas free distilled water at a stated temperature (per Definition E 12).

4 Apparatus

4.1 *Pycnometer* – Either a volumetric flask having a capacity of at least 100 ml or a stoppered bottle having a capacity of at least 50 ml (See Note 2). The stopper shall be of the same material as the bottle, and of such size and shape that it can be easily inserted to a fixed depth in the neck of the bottle, and shall have a small hole through its center to permit the emission of air and surplus water.

Note 2 – The use of either the volumetric flask or the stoppered bottle is a matter of individual preference, but in general, the flask should be used when a larger sample than can be used in the stoppered bottle is needed due to maximum grain size of the sample.

4.2 *Balance* – A balance having a capacity of 1 kilogram or more and sensitive to 0.001 gram or less.

4.3 *Oven* – A thermostatically controlled drying oven capable of maintaining a temperature of 110 ± 5°C (230 ± 9°F).

4.4 *Thermometer* – A thermometer covering the range of 0 to 50°C (32 to 122°F), readable and accurate to 1°C (2°F).

5 General Requirements for Weighing

5.1 When the volumetric flask is used in the specific gravity determination, all masses shall be determined to the nearest 0.01 g. When the stoppered bottle is used in the specific gravity determination, all masses shall be determined to the nearest 0.001 g.

6 Calibration of Pycnometer

6.1 The pycnometer shall be cleaned, dried, weighed, and the mass recorded. The pycnometer shall be filled with distilled water (See Note 3) essentially at room temperature. The mass of the pycnometer and water, W_a, shall be determined and recorded. A thermometer shall be inserted in the water and its temperature, T_i determined to the nearest whole degree.

Note 3 – Kerosene is a better wetting agent than water for most soils and may be used in place of distilled water for oven-dried samples.

6.2 From the mass W_a determined at the observed temperature T_i a table of values of mass W_a shall be prepared for a series of temperatures that are likely to prevail when masses W_b are determined later (See Note 4). These values of W_a shall be calculated as follows:

$$W_a \text{ (at } T_x) = (\text{density of water at } T_x/\text{density of water at } T_i) \times (W_a(\text{at } T_i) - W_f) + W_f$$

where:

W_a = mass of pycnometer and water, in grams,

W_f = mass of pycnometer, in grams,

T_i = observed temperature of water, in degrees Celsius, and

T_x = any other desired temperature, in degrees Celsius.

Note 4 – This method provides a procedure that is most convenient for laboratories making many determinations with the same pycnometer. It is equally applicable to a single determination. Bringing the pycnometer and contents to some designated temperature when masses W_a and W_b are taken, requires considerable time. It is much more convenient to prepare a table of masses W_a for various temperatures likely to prevail when masses W_b are taken. It is important that masses W_a and W_b be based on water at the same temperature. Values for the relative density of water at temperatures from 18 to 30°C are given in Table 1.

TABLE 1. Relative Density of Water and Conversion Factor K for Various Temperatures

Temperature, deg C	Relative Density of Water	Correction Factor K
18	0.9986244	1.0004
19	0.9984347	1.0002
20	0.9982343	1.0000
21	0.9980233	0.9998
22	0.9978019	0.9996
23	0.9975702	0.9993
24	0.9973286	0.9991
25	0.9970770	0.9989
26	0.9968156	0.9986
27	0.9965451	0.9983
28	0.9962652	0.9980
29	0.9959761	0.9977
30	0.9956780	0.9974

7 Sample

7.1 The soil to be used in the specific gravity test may contain its natural moisture or be oven-dried. The mass of the test sample on an oven-dry basis shall be at least 25 g when the volumetric flask is to be used, and at least 10 g when the stoppered bottle is to be used.

7.2 *Samples Containing Natural Moisture* - When the sample contains its natural moisture, the mass of the soil, W_a, on an oven-dry basis shall be determined at the end of the test by evaporating the water in an oven maintained at 110 ± 5°C (230 ± 9°F) (See Note 5). Samples of clay soils containing their natural moisture content shall be dispersed in distilled water before placing in the flask, using the dispersing equipment specified in AASHTO T 88 (See Note 6).

7.3 *Oven-Dried Samples* - When an oven-dried sample is to be used, the sample shall be dried for at least 12 h, or to constant mass, in an oven maintained at 110 ±5°C (230 ± 9°F)(See Note 5), cooled to room temperature, then weighed and transferred to pycnometer or transferred to pycnometer then weighed. Distilled water shall be added into pycnometer in an amount that will provide complete sample coverage. The sample shall then soak for at least 12 h.

Note 5 – Drying of certain soils at 110°C may bring about loss of moisture of composition or hydration, and in such cases drying shall be done, if desired, in reduced air pressure and at a lower temperature.

Note 6 – The minimum volume of slurry that can be prepared by the dispersing equipment specified in AASHTO T 88 is such that a 500-ml flask is needed as the pycnometer.

8 Procedure

8.1 The sample as prepared in Section 7 shall have distilled water added to fill the volumetric flask about three-fourths full or the stoppered bottle about half full.

8.2 Remove entrapped air by either of the following methods: (1) subject the contents to a partial vacuum of 100 mm Hg or less absolute pressure or (2) boil gently for at least 10 min., while occasionally rolling the pycnometer to assist in the removal of the air. Subjection of the contents to reduced air pressure may be done either by connecting the pycnometer directly to an aspirator or vacuum pump, or by use of a bell jar. Some soils boil violently when subjected to reduced air pressure. It will be necessary in those cases to reduce the air pressure at a slower rate or to use a larger flask (See Note 7). Samples that are heated shall be cooled to room temperature.

Note 7 – When using partial vacuum agitate the flask gently at intervals during the evacuation process. (A) Samples containing natural moisture with high plasticity may require 6 to 8 hours to remove air; samples with low plasticity may require 4 to 6 hours to remove air. (B) Oven-dried samples may require 2 to 4 hours to remove air.

8.3 Fill the pycnometer with distilled water to its calibrated capacity, clean the outside and dry with a clean, dry cloth. Determine the mass of the pycnometer and contents W_b, and the temperature in degrees Celsius, T_x, of the contents as described in Section 6.

9 Calculation and Report

9.1 Calculate the specific gravity of the soil, based on water at a temperature T_x, as follows:

$$\text{Specific gravity, } T_x/T_x = W_o/[W_o + (W_a - W_b)]$$

where:

W_o = mass of sample of oven-dried soil in grams.

W_a = mass of pycnometer filled with water at temperature T_x, (See Note 8) in grams, and

T_x = temperature of the contents of the pycnometer when mass W_b was determined, in degrees Celsius.

Note 8 – This value shall be taken from the table of values of W_a, prepared in accordance with Section 7.2 for the temperature prevailing when mass W_b was taken.

9.2 Unless otherwise required, specific gravity values reported shall be based on water at 20°C. The value based on water at 20°C shall be calculated from the value based on water at the observed temperature T_x, as follows:

$$\text{Specific gravity, } T_x/20°\text{C} = K * \text{specific gravity, } T_x/T_x$$

where:

K = a number found by dividing the relative density of water at temperature T_x by the relative density of water at 20°C. Values for a range of temperatures are given in Table 1.

9.3 When it is desired to report the specific gravity value based on water at 4°C, such a specific gravity value may be calculated by multiplying the specific gravity value at temperature T_x by the relative density of water at temperature T_x.

9.4 When any portion of the original sample of soil is eliminated in the preparation of the test sample, the portion on which the test has been made shall be reported.

9.5 When using the volumetric flask to determine specific gravities, report results to at least the nearest 0.01.

9.6 When using the stoppered bottle to determine specific gravities, report results to at least the nearest 0.001.

METHODS OF SAMPLING AND TESTING
MT 221-06
TOTAL EVAPORABLE MOISTURE CONTENT OF AGGREGATE BY DRYING
(Modified AASHTO T 255)

1 Scope:

1.1 This test method covers the determination of the percentage of evaporable moisture in a sample of aggregate by drying both surface moisture and moisture in the pores of the aggregate. Some aggregate may contain water that is chemically combined with the minerals in the aggregate. Such water is not evaporable and is not included in the percentage determined by this test method.

1.2 The values stated in SI units are to be regarded as the standard. The values stated in parentheses are provided for information only.

2 Referenced Documents:

2.1 ***MT Materials Manual:***
MT-201 Sampling Roadway Materials
MT-202 Sieve Analysis of Fine and Coarse Aggregate
MT-203 Unit Weight of Aggregate
MT-204 Specific Gravity and Absorption of Fine Aggregate
MT-205 Specific Gravity and Absorption of Coarse Aggregate

3 Apparatus:

3.1 *Balance* – The balance shall have sufficient capacity, be readable to 0.1 percent of the sample mass, or better.

3.2 *Source of Heat* – A ventilated oven capable of maintaining the temperature surrounding the sample at 110 ± 5°C (230 ± 9°F). Where close control of the temperature is not required, other suitable sources of heat may be used, such as an electric or gas hot plate, electric heat lamps, or a ventilated microwave oven.

3.3 *Sample Container* – A container not affected by the heat, and of sufficient volume to contain the sample without danger of spilling, and of such shape that the depth of the sample will not exceed one-fifth of the least lateral dimension.

3.4 *Precaution* – When a microwave oven is used, the container shall be non-metallic.

Note1 – Except for testing large samples, an ordinary frying pan is suitable for use with a hot plate, or any shallow flat-bottomed metal pan with heat lamps or oven. Note precaution in Section 3.4.

3.5 *Stirrer* – A metal spoon or spatula of convenient size.

4 Sample:

4.1 Sampling shall be in accordance with MT-201, except the sample size may be as stated in Table 1.

4 Sample: (continued)

Table 1 – Sample Size for Aggregate

Nominal Maximum size of Aggregate mm (1n.)	Mass of Normal Weight Aggregate Sample, Min. kg. (lb)
4.75 (No. 4)	0.5 (1.1)
9.5 (3/8)	1.5 (3.3)
12.5 (1/2)	2 (4)
19.0 (3/4)	3 (7)
25.0 (1)	4 (9)
37.5 (1 ½)	6 (13)
50 (2)	8 (18)
63 (2 ½)	10 (22)
75 (3)	13 (29)
90 (3 ½)	16 (35)
100 (4)	25 (55)
150 (6)	50 (110)

4.2 Secure a sample of the aggregate representative of the moisture content in the supply being tested and having a mass not less than the amount listed in Table 1. Protect the sample against loss of moisture prior to determining the mass.

5 Procedure:

5.1 Determine the mass of the sample to the nearest 0.1 percent.

5.2 Dry the sample thoroughly in the sample container by means of the selected source of heat, exercising care to avoid the loss of any particles. Very rapid heating may cause some of the particle to explode, resulting in loss of particles. Use a controlled temperature oven when excessive heat may alter the character of the aggregate, or where more precise measurement if required. If a source of heat other than the controlled temperature oven is used, stir the sample during drying to accelerate the operation and avoid local overheating. When using a microwave oven, stirring of the sample is optional.

5.2.1 *Caution:* When using a microwave oven, occasionally minerals are present in aggregates that may cause the material to overheat and explode. If this occurs, it can damage the microwave oven.

5.3 The sample is thoroughly dry when further heating causes, or would cause, less than 0.1 percent additional loss in mass.

5.4 Determine the mass of the dried sample to the nearest 0.1 percent after it has cooled sufficiently not to damage the balance.

6 Calculation:

6.1 Calculate total evaporable moisture content as follows:

$$P = 100(W - D)/D$$

where:

P = total evaporable moisture content of sample, percent;

6 **Calculation:** (continued)

W = mass of original sample, g;

D = mass of dried sample, g.

6.2 Surface moisture content is equal to the difference between the total evaporable moisture content and the absorption, with all values based on the mass of a dry sample.

Note 2 - Absorption may be determined in accordance with MT-204, Specific Gravity and Absorption of Fine Aggregate, and MT-205, Specific Gravity and Absorption of Coarse. Aggregate

METHODS OF SAMPLING AND TESTING
MT 222-04
METHOD OF TEST FOR DETERMINING THE IN-PLACE MOISTURE AND DENSITY OF SOILS BY THE SAND CONE METHOD
(Modified AASHTO T191)

1 Scope:

1.1 This method of test is intended for determining the in-place density of soils. The apparatus described herein is restricted to tests in soils containing particles not larger than 50 mm (2 in.) in diameter.

1.2 The following applies to all specified limits in this standard: For the purposes of determining conformance with these specifications, an observed value or a calculated value shall be rounded off "to the nearest unit" in the last right hand-place of figures used in expressing the limiting value, in accordance with AASHTO R 11.

2 Referenced Documents:

AASHTO Standards:

R 11 Indicating Which Place of Figures are to be Considered Significant in Specified Limiting Values.

MT Materials Manual:

MT 203 Unit Weight of Aggregate
MT 210 Moisture-Density Relations of Soils Using a 5.5 LB. Rammer and 12 Inch Drop
MT 215 Moisture content by Calcium Carbide Method
MT 227 Laboratory Determination of Moisture Content of Soils

3 Apparatus:

3.1 *Density Apparatus with Base Plate*--The density apparatus shall consist of a 4 liter (1 gal.) jar and a detachable appliance consisting of a cylindrical valve with an orifice 12.7 mm (2 in.) in diameter and having a small funnel continuing to a standard *G* mason jar top on one end and a large funnel on the other end. The valve shall have stops to prevent rotating the valve past the completely open or completely closed positions. The apparatus shall conform to the requirements shown in Figure 1. The apparatus described here represents a design that has proven satisfactory. Other apparatus of similar proportions will perform equally well so long as the basic principles of the sand-volume determination are observed. The base plate is required for calibrations and testing.

3.2 *Calibration Container*—A sturdy cylindrical container of known volume (V_c). The container shall be dimensionally approximate the largest test hole that will be dug. The container shall be calibrated according to MT 203.

Note 1 *– The internal diameter of the container shall be equal to or slightly less than the diameter of the opening of the base plate used with the sand cone.*

3.3 *Sand*--Any clean, dry, free-flowing, uncemented sand having few, if any, particles passing the 0.075 mm or retained on the 2.00 mm sieves. In selecting a sand for use, several bulk density determinations should be made using the same representative sample for each determination. To be acceptable the sand shall not have a variation in bulk density greater than 1 percent.

3.4 *Balances*--A balance or scale of 10 kg. capacity accurate to 1.0 g. and a balance of 500 g. capacity accurate to 0.1 g.

3 Apparatus: (continued)

3.5 *Drying Equipment*--Stove or oven or other suitable equipment for drying moisture content samples.

3.6 *Miscellaneous Equipment*--Small pick, chisels, or spoons for digging test hole; 254 mm (10 in.) frying pan or any suitable container for drying moisture samples; buckets with lids, seamless tin cans with lids, canvas sacks or other suitable containers for retaining the density sample, moisture sample or density sand respectively; thermometer for determining the temperature of water; small paint-type brush, slide rule, notebook, etc.

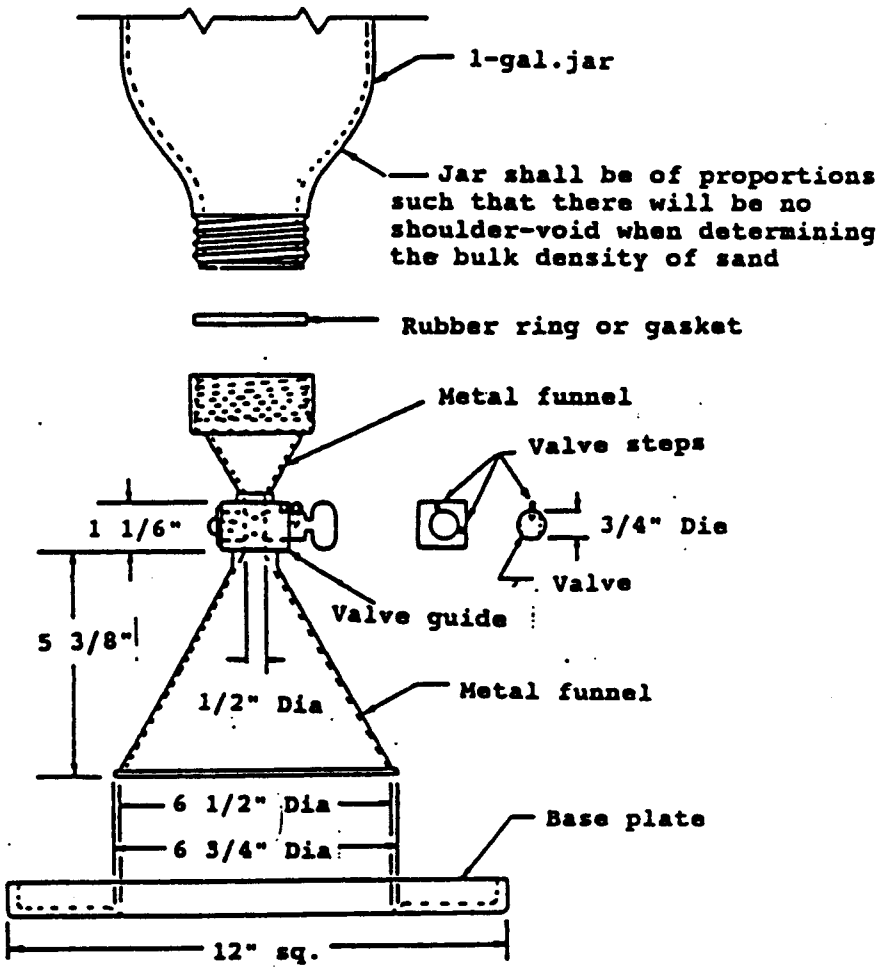

FIGURE 1 Density Apparatus

Metric Equivalents

In.	mm	in.	mm
½	12.7	6 ½	165.1
¾	19.1	6 ¾	171.5
1 1/8	28.6	12	304.8
5 3/8	136.5		

4 Cone Correction and Bulk Density Factors:

4.1 Filling the apparatus:

4.1.1 Place the empty apparatus upright on a firm level surface, close the valve and fill the funnel with sand.

4.1.2 Open the valve and keep the funnel at least half full with sand during filling. When the sand stops flowing into the apparatus, close the valve sharply and empty the excess sand (Note 2).

Note 2 *– Vibration of the sand during any mass-volume determination may increase the bulk density of the sand and decrease the accuracy of the determination. Appreciable time intervals between the bulk density determination of the sand and its use in the field may result in change in the bulk density caused by a change in the moisture content or effective gradation.*

4.1.3 Determine and record the mass of the apparatus filled with sand (m_1).

4.2 Determine the mass of sand required to fill the funnel and base plate (*Cone Correction,* C_c).

4.2.1 Place the base plate on a clean, level, plane surface. Invert the sand-cone filled with sand and seat the funnel in the recess of the base plate.

4.2.2 Open the valve fully, and allow the sand to flow until the sand stops flowing (Note 2).

4.2.3 Close the valve sharply, remove the apparatus and determine the mass of the apparatus and the remaining sand (m_2).

4.2.4 The mass of the sand required to fill the cone and base plate is calculated by the difference between the initial mass (4.1.3), and the final mass (4.2.3). Record this mass as the cone correction ($C_c = m_1 - m_2$) *(Note 3).*

Note 3 *– For each container/bag of sand there will be a unique cone correction and sand calibration factor. Each sand-cone and matched base plate will also have a set of unique cone corrections and bulk sand densities. If more than one sand-cone apparatus is available, the sand-cone and base plate should be marked and the associated correction/density factors recorded.*

4.3 Determining the bulk density of sand (D_B) to be used in the field test.

4.3.1 Replace the sand removed in the funnel determination according to section 4.1, close the valve, and determine the mass of the apparatus and sand (m_3).

4.3.2 Position the calibration container on a clean, level, plane surface. Place the base plate on the calibration container (Note 1). Invert the apparatus and seat the funnel in the recess of the base plate.

4.3.3 Open the valve and keep open until the sand stops flowing (Note 2).

4.3.4 Close the valve sharply, remove the apparatus and determine the remaining mass of the apparatus and sand (m_4).

4.3.5 Calculate the mass of the sand needed to fill the container, funnel and base plate. Subtract the final mass (4.3.5) from the initial mass (4.3.1).

4.3.6 The mass of the sand needed to fill the container only is determined by subtracting the mass of the cone correction (4.2.4) from the total mass required to fill the container with the funnel and base plate (4.3.5).

4 Cone Correction and Bulk Density Factors: (continued)

4.3.7 Determine the bulk density of the calibration sand (sand calibration factor). Divide the mass of the sand needed to fill the container (4.3.6), by the volume of the calibration container as determined according to MT 203.

$D_B = (m_3 - m_4 - C_c)/V_c$

4.3.8 Record this factor for future reference (Note 3).

5 Procedure:

5.1 Fill the apparatus with sand according to Section 4.1. Record the total mass (m_5).

5.2 Prepare the surface of the location to be tested so that it is a level plane.

5.3 Seat the base plate on the prepared surface. Dig the test hole inside the opening of the base plate, being very careful to avoid disturbing the soil that will bound the hole. Soils that are essentially granular require extreme care. Place all loosened soil in a container, being careful to avoid losing nay material. Care must be taken to avoid moisture loss during excavation.

5.4 Place the apparatus on the base plate, open the valve. After the sand has stopped flowing, close the valve (Note 2).

5.5 Weigh the apparatus with remaining sand (m_6) and record..

5.6 Weigh the moist material that was removed from the test hole.

5.7 Mix the material thoroughly and secure and weigh a representative sample for moisture determination.

5.8 Dry and weigh the soil sample for moisture content determination in accordance with MT 227. Calculate the moisture content to the nearest 0.1percent.

5.9 The minimum test hole volumes suggested determining the in-place density of soil mixtures are given in Table 1. The table shows the suggested minimum mass of the moisture content sample in relation to the maximum particle size in soil mixtures.

Table 1
Minimum Test Hole volumes and Minimum Moisture Content Samples
Based on Maximum Particle Size

Maximum Particle Size		Minimum Test Hole Volume		Minimum Moisture Content Sample, g.
mm	Alternate	cm^3	cu ft	
4.75	No. 4 sieve	710	0.025	100
12.5	½ in.	1415	0.050	250
25.0	1 in.	2125	0.075	500
50.0	2 in.	2830	0.100	1000

6 Calculations:

6.1 Calculate the volume of the test hole (V_H):

$V_H = (m_5 - m_6 - C_c)/D_B$

Where:

V_H = volume of test hole,

m_5 = initial mass of apparatus and sand,

m_6 = final mass of the apparatus and sand,

C_c = Cone Correction, and

D_B = bulk density of the sand.

6.1.1 Calculate the volume of the test hole to the nearest 1 cm^3 (0.0001 ft^3).

6.2 Calculate the dry mass of the material removed from the test hole as follows:

$M_{DS} = (M_{WS}/(1 + (w/100))$

where:

M_{DS} = dry mass of the material removed from the hole,

M_{WS} = moist mass of the material removed from the test hole, and

w = percentage of moisture, in the material removed from the test hole.

6.2.1 Calculate the dry mass of the material to the nearest 1 g (0.01 lb).

6.3 Calculate the in-place dry density for the material removed from the test hole as follows:

$D_D = M_{DS}/V_H$

where:

D_D = in-place dry density of the material removed from the hole,

M_{DS} = dry mass of the material removed from the test hole (Section 5.2), and

V_H = volume of the test hole (Section 5.1).

6.3.1 Calculate the in-place dry density to the nearest 1 Kg/m^3 (0.1 lb/ft^3).

Note 4 – 0.001 g/cm^3 = 1 Kg/M^3

Note 5 – It may be desired to express the in-place density as a percentage of some other density, for example, the laboratory maximum density determined in accordance with MT-210. This relationship can be determined by dividing the in-place density by the maximum density and multiplying by 100.

METHODS OF SAMPLING AND TESTING
MT 223-04
METHOD OF TEST FOR CLAY LUMPS AND FRIABLE PARTICLES IN AGGREGATES
(Modified AASHTO T 112)

1 Scope:

1.1 This method covers the approximate determination of clay lumps and friable particles in natural aggregates.

1.2 This standard may involve hazardous materials, operations and equipment. This standard does not purport to address all of the safety problems associated with its use. It is the responsibility of whoever uses this standard to consult and establish appropriate safety and health practices and determine the applicability of regulatory limitations prior to use.

2 Referenced Documents:

2.1 ***AASHTO:***
T 112 Clay Lumps and Friable Particles in Aggregate

MT Manual:
MT 202 Sieve Analysis of Fine and Coarse Aggregate
MT-405 Sieves for Testing Purposes

3 Apparatus:

3.1 *Balances* - Balances or scales for determining the mass of the test samples shall be sensitive to 0.1 percent of the mass of the sample. The residue (Section 5) shall be weighed on a balance or scale sensitive to 0.02 percent of the mass of the original test sample.

3.2 *Containers* - Rust-resistant containers of a size and shape that will permit the spreading of the sample on the bottom in a thin layer.

3.3 *Sieves* - Sieves conforming to MT-405, Sieves for Testing Purposes.

3.4 *Oven* - Oven capable of maintaining a temperature of 230 ± 9ºF (110 ± 5ºC).

4 Samples:

4.1 The aggregate shall be dried to substantially constant mass at a temperature of 230 ± 9ºF (110 ± 5ºC).

4.2 Test samples of fine aggregate shall consist of particles coarser than a 1.18 mm (No.16) sieve and shall weigh not less than 450 grams.

4.3 Test samples of coarse aggregate shall be separated into different sizes, using the following sieves: 4 Mesh (4.75 mm), 3/8 in. (9.5 mm), 3/4 in. (19.0 mm), and 1½ in. (37.5 mm). The test sample shall weigh not less than indicated in the following table:

4 Samples: (continued)

Minimum Size of Particles Making up Sample	Mass of Test Sample, Min, g.
4-M to 3/8 in. (4.75 to 9.5 mm)	1000
3/8 to 3/4 in. (9.5 to 19.0 mm)	2000
3/4 to 1½ in. (19.0 to 37.5 mm)	3000
Over 1½ in. (37.5 mm)	5000

4.4 If the grading of the original sample provides less than 5% of any of the sizes indicated in Section 4.3, do not test that size.

4.5 In the case of aggregate which is composed of substantial amounts of both fine and coarse aggregate sizes, separate the material into two sizes at the 4.75 mm (No. 4) sieve, and prepare the samples of fine and coarse aggregate in accordance with sections 4.3 and 4.4. Any aggregate containing 50 percent or more material retained on the 4.74 mm (No. 4) sieve is considered to be coarse aggregate.

Note 1 – In most cases, only the plus 4.75 mm (No. 4) fraction of coarse aggregate needs to be evaluated by this test, regardless of the amount of minus 4.75 mm (No. 4) material present. However, the amount of 1.18 mm (No. 16) to 4.75 mm (No. 4) material present shall be included in the weight of the test sample in Section 5.1when calculating the percent of clay lumps and friable particles.

5 Procedure:

5.1 Weigh the test sample and spread it in a thin layer on the bottom of the container, cover it with water, and allow it to soak for a period of 24 ± 4 hours. Roll and squeeze particles individually between the thumb and forefinger to attempt to break particles into smaller sizes. Do not use fingernails to break up particles, or press particles against a hard surface or each other. Any particles that can be broken with the fingers into fines removable by wet sieving shall be classified as clay lumps or friable particles. After all discernible clay lumps and friable particles have been broken, separate the undersized material from the remainder of the sample by wet sieving over the sieve prescribed in the following table.

Size of Particles Making up Test Sample	Size of Sieve for Removing Residue of Clay Lumps and Friable Particles
Fine Aggregate retained on 16-M (1.18 mm)	20-M (0.850 µm)
4-M to 3/8 in (4.75 to 9.5 mm)	8-M (2.36 mm)
3/8 to 3/4 in. (9.5 to 19.0 mm)	4-M (4.75 mm)
3/4 to 1½ in. (19.0 to 37.5 mm)	4-M (4.75 mm)
Over 1½ in. (37.5 mm)	4-M (4.75 mm)

Wet sieve is to be accomplished by passing water over the sample through the sieve while manually agitating the sieve until all undersize material has been removed.

5.2 The retained particles shall be carefully removed from the sieve and dried to substantially

constant mass at a temperature of 230 ± 9ºF (110 ± 5ºC), allowed to cool, and weighed to an accuracy of 0.02 percent, based on the original mass of the test sample.

6 Calculations

6.1 Calculate the percent of clay lumps and friable particles in fine aggregate or individual sizes of coarse aggregate as follows:

$$P = [(M - R)/M] \times 100$$

where:

P = percent of clay lumps and friable particles,

M = mass of test sample [for fine aggregate the mass of the portion coarser than the 16-m (1.18 mm) sieve as described in Sec. 4.2, and

R = mass of particles retained on designated sieve, as determined in accordance with Section 5.2.

6.2 For coarse aggregates, the percent of clay lumps and friable particles shall be an average based on the percent of clay lumps and friable particles in each sieve size fraction weighed in accordance with the grading of the original sample before separation or, preferably the average grading of the supply represented by the sample. Should the aggregate contain less than 5 percent of the material in a given size, that size shall be considered to contain the same percent of clay lumps and friable particles as the next larger or next smaller size, whichever is present.

METHODS OF SAMPLING AND TESTING
MT 224-04
TERMS RELATING TO SUBGRADE, SOIL AGGREGATE AND FILL MATERIALS

1 Scope:

1.1 These definitions cover terms used in descriptions and specifications of materials occurring as or employed in the construction of sub-grades, soil-aggregate base and surface courses and fills.

2 Definitions of Rock and Soil:

2.1 ***Rock*** - Natural solid mineral matter occurring in large masses of fragments.

2.2 ***Soil*** **-** Sediment or other unconsolidated accumulation of solid particles produced by the physical and chemical disintegration of rocks and which may or may not contain organic matter.

2.3 ***Broken Rock*** **-** Angular fragments of rock which will be retained on a 3-inch sieve.

2.4 ***Boulders*** **-** Rounded fragments of rock, which will be retained on a 3-inch sieve.

3 Definitions of Soil- Aggregate and its Components:

3.1 ***Soil – Aggregate (Dense- Grade Aggregate)*** **-** Natural or prepared mixtures consisting predominately of stone, gravel, or sand and containing silt-clay (minus No. 200 material).

3.2 ***Stone*** - Crushed or naturally angular particles or rock which will pass a 3- inch sieve and be retained on a No. 10 sieve.

3.2.1 ***Coarse Stone*** **-** Stone passing the 3-inch sieve and retaining on the 1-inch sieve.

3.2.2 ***Medium Stone*** **-** Stone passing the 1-inch sieve and retaining on the 3/8-inch sieve.

3.2.3 ***Fine Stone*** **-** Stone passing the 3/8-inch sieve and retaining on the No. 10 sieve.

3.3 ***Gravel*** **-** Rounded particles of rock, which will pass a 3-inch sieve and be retained on a No. 10 sieve.

3.3.1 ***Coarse Gravel*** **-** Gravel passing the 3-inch sieve and retaining on the 1 –inch sieve.

3.3.2 ***Medium Gravel*** **-** Gravel passing the 1-inch sieve and retaining on the 3/8-inch sieve.

3.3.3 ***Fine Gravel*** **-** Gravel passing the 3/8-inch sieve and retained on the No. 10 sieve.

3.4 ***Sand*** **-** Granular material resulting from the disintegration, grinding, or crushing of rock and which will pass the No. 10 sieve and be retained on the 200 sieve.

3.4.1 ***Coarse Sand*** **-** Sand passing the No. 10 sieve and retaining on the No. 40 sieve**.**

3.4.2 ***Fine Sand*** **-** Sand passing the No. 40 sieve and retaining on the No. 200 sieve**.**

3 Definitions of Soil- Aggregate and its Components: (continued)

3.5 ***Silt-Clay (minus No. 200)* -** Fine soil particles which will pass the No. 200 sieve.

3.5.1 ***Silt Fraction* -** Material passing the No. 200 sieve. and larger than .005 mm.

3.5.2 ***Clay Fraction* -** Materials smaller than .005 mm.

3.6 ***Colloids* -** Materials smaller than .001 mm.

4 Definitions of Pavement Substructure Components:

4.1 ***Embankment Foundation* -** The material on which an embankment is placed.

4.2 ***Embankment (Fill)* -** A raised structure of soil, soil-aggregate, or rock.

4.3 ***Sub-grade* -** The prepared and compacted soil immediately below the pavement system and extending to such depth as will affect the structural system.

4.4 ***Sub-base* -** The layer used in pavement system between the sub-grade and the base course.

4.5 ***Base* -** The layer used in a pavement system to reinforce and protect the sub-grade or sub-base.

METHODS OF SAMPLING AND TESTING
MT 225-04
PROCEDURE FOR
FAILING AND CHECK SAMPLES OF AGGREGATE

1 SCOPE:

1.1 This method defines the procedures for obtaining check samples and directs the necessary corrective action required to return failing material to acceptable limits.

1.2 It is a training requirement for new personnel sampling or testing aggregate to view the Safety and Training Bureau's slide and audio presentation, "Aggregate Gradation Testing", prior to performing this test.

2 Referenced Documents:

2.1 ***MT Manual:***
MT-201 Sampling Roadway Materials

3 Production Samples:

3.1 In general, a sample from a moving belt or a sampling device can be represented by a check sample only if the original sample has been split with a portion designated for use as a check sample. Samples taken at a later time cannot be designated as check samples since considerable production may have occurred between the time of testing the failing sample and testing of the next sample. Therefore, the second sample simply becomes another Acceptance sample and is numbered consecutively.

3.1.1 If the second sample, taken after further production, also fails, steps must be taken to halt the production of aggregate until an explanation for the failure has been found and corrective action can be taken.

3.1.2 A few examples of the possible causes for failing tests are listed below:

A hole in one or more screens in the plant.

An unrepresentative sample.

An error in the testing procedure.

An error in calculating the test results.

Testing equipment not in calibration or not meeting specifications.

A change in the physical characteristics of the material in the pit (in the case of a crushing operation).

Stockpile contamination.

A plugged feeder or plugged bins.

4 Road and Windrow Samples:

4.1 Test results from a sample of material that has been placed on the roadway can easily be checked by obtaining another sample of the material from the same location on the roadway and in the same manner as the failing sample. Check for possible causes of the failing tests as in 3.1.2, where applicable. (See MT-201, Sampling Roadway Materials). If the check samples also fail to meet specifications, an investigation must be conducted to determine the extent and seriousness of the problem.

4 Road and Windrow Samples: (continued)

Note 1 - A single check sample is not a satisfactory indication that the production of aggregate has returned to acceptable limits. At least two passing check samples must be taken.

5 Stockpile Samples:

5.1 Refer to MT-201, Section 10, for the procedure in sampling a stockpile. The most satisfactory method of determining a stockpile average is to sample and test the material at the time of crushing. If tests of stockpiled material do not meet specifications, the same investigation should be conducted as described in paragraph 3.1.2. Check samples on material taken during production of a stockpile must be a split of the original sample. Existing stockpiles can be re-sampled at a later time and that sample can be designated as a check sample.

6 Plant Mix Aggregate:

6.1 Production test numbering will begin and continue as long as the sample is from material being incorporated into the work. These are acceptance samples.

6.2 Tests which are run to monitor operations adjustments, while the material being sampled is not to be incorporated into the work, shall be labeled and numbered as “Non-production #1,” “Non-production #2,” etc. Only those tests run a split of the same sample

6.3 Only those tests run on a split of the same sample will be designated as check samples.

7 Numbering Check Samples:

7.1 When a check sample is taken it will be assigned the same number as the sample being checked, with the addition of a letter suffix. For example, if sample number 38 failed to meet specifications, the first check sample would numbered 38-A, the second check sample would be 38-B, etc.

8 Other Samples:

8.1 Usually check tests on the materials not listed above are covered in the specific methods for the materials being tested.

9 Remarks:

9.1 The person with the responsibility for sampling and testing aggregates shall, in the case of failing tests, remark on the work sheet, or summary, the corrective action taken to resolve the problem.

METHODS OF SAMPLING AND TESTING
MT 226-04
MAXIMUM ACCEPTABLE DEVIATIONS
IN THE SIEVE ANALYSIS OF INDEPENDENT ASSURANCE SAMPLES
(MONTANA METHOD)

1 Scope:

1.1 The charts included in this method shall serve as a guide in evaluating the maximum acceptable deviations in the sieve analysis of **Independent Assurance** samples. If the individual grading percentages vary from the group average percentages by more than the amounts listed, the cause must be determined and the error remedied. Deviation percentages are based on the weight of the total sample.

2 References:

2.1 ***MT Manual:***

MT 201 Preparing the Three-way Split Samples for Test and the Responsibility for Investigating Discrepancies.

MT 602 The Federal Highway Administration Policy and Procedure for Sampling and Testing Independent Assurance and Final Record Samples.

MT 607 Procedure for Reducing Field Samples of Aggregate to Testing Size

Note 1 - The specifications apply to the material while the permissible deviation is used <u>only</u> to compare sieve analysis obtained in the field, division or area laboratory and Materials Bureau.

FINE AGGREGATE FOR CONCRETE

PERCENTAGE BY WEIGHT PASSING SQUARE MESH SIEVES		
Sieve Size	Percent Passing	Permissible Variation
3/8” (9.5 mm)	100	- 2%
No. 4 (4.75 mm)	95 - 100	± 2%
No. 8 (2.36 mm)	80 - 100	± 2%
No. 16 (1.18 mm)	50 - 85	± 2%
No. 30 (0.600 µm)	25 - 60	± 2%
No. 50 (0.300 µm)	5 - 30	± 2%
No. 100 (0.150 µm)	0 - 10	± 2%
No. 200 (0.075 µm)	0 - 3	± 2%

COARSE AGGREGATE FOR CONCRETE

PERCENTAGE BY WEIGHT PASSING SQUARE MESH SIEVES				
GRADATION	No. 1	No. 2	No. 3	No. 4
Sieve Size	1 1/2” to No. 4	3/4 “ to No. 8	1 1/2” to 3/8”	1/2“ to No. 8
2” (50 mm)	100 - 2%		100 - 2%	
1 1/2” (37.5 mm)	95 - 100 ± 3%		90 - 100 ± 3%	
1” (25 mm)		100 - 2%	20 - 55 ± 3%	
3/4” (19 mm)	35 - 70 ± 3%	90 - 100 ± 3%	0 - 15 ± 3%	100 - 2%
1/2” (12.5 mm)				90 - 100 ± 3%
3/8” (9.5 mm)	10 - 30 ± 2%	20 - 55 ± 2%	0 - 5 ± 2%	40 - 70 ± 2%
No. 4 (4.75 mm)	0 - 5 ± 2%	0 - 10 ± 2%		0 - 15 ± 2%
No. 8 (2.36 mm)		0 - 5 ± 2%		0 - 5 ± 2%

SELECTED SURFACING

PERCENTAGE BY WEIGHT PASSING SQUARE MESH SIEVES						
Sieve Size	Grade 1	Grade 2	Grade 3	Grade 4	Grade 5	Grade 6
4" (100 mm)	100 - 2%					
3" (75 mm)		100 - 2%				
2 1/2" (63 mm)			100 - 2%			
2” (50 mm)				100 - 2%		
1 1/2" (37.5 mm)					100 - 2%	
1" (25 mm)						100 - 2%
No. 200 (75 µm)	15 max ± 1.5%	15 max ± 1.5%	15 max ± 1.5%	15 max ± 1.5%	15 max ± 1.5%	15 max ± 1.5%

SAND SURFACING

PERCENTAGE BY WEIGHT PASSING SQUARE MESH SIEVES					
Sieve Size	Grade 1	Grade 2	Grade 3	Grade 4	Grade 5
1 1/2" (37.5 mm)	100 - 2%				
1" (25.0 mm)		100 - 2%			
3/4" (19.0 mm)			100 - 2%		
1/2" (12.5 mm)				100 - 2%	
No. 4 (4.75 mm)					100 - 2%
No. 10 (2.00 mm)	65 min ± 2%	65 min ± 2%	65 min ± 2%	50 min ± 2%	50 min ± 2%
No. 200 (75 µm)	20 max ±1.5%	20 max ±1.5%	20 max ±1.5%	20 max ±1.5%	20 max ±1.5%

CRUSHED TOP SURFACING, TYPE "A"

PERCENTAGE BY WEIGHT PASSING SQUARE MESH SIEVES					
Sieve Size	Grade 1	Grade 2	Grade 3	Grade 4	Grade 5
1" (25 mm)	100 - 2%				
3/4" (19.0 mm)		100 - 2%			
5/8" (16.0 mm)			100 - 2%		
1/2" (12.5 mm)				100 - 2%	
3/8" (9.5 mm)					100 - 2%
No. 4 (4.75 mm)	40 - 70 ± 2%	40 - 70 ± 2%	40 - 70 ± 2%	40 - 70 ± 2%	50 - 80 ± 2%
No. 10 (2.00 mm)	25 - 55 ± 2%	25 - 55 ± 2%	25 - 55 ± 2%	25 - 60 ± 2%	35 - 70 ± 2%
No. 200 (75 µm)	2 – 8 ± 1.5%	2 - 8 ± 1.5%	2 - 8 ± 1.5%	2 - 8 ± 1.5%	2 - 8 ± 1.5%

CRUSHED TOP SURFACING, TYPE "B"

PERCENTAGE BY WEIGHT PASSING SQUARE MESH SIEVES			
Sieve Size	Grade 1	Grade 2	Grade 3
1 1/2" (37.5 mm)	100 - 2%		
1" (25 mm)		100 - 2%	
3/4" (19.0 mm)			100 - 2%
1/2" (12.5 mm)			
No. 4 (4.75 mm)	40 - 80 ± 2%	40 - 80 ± 2%	40 - 80 ± 2%
No. 10 (2.00 mm)	25 - 60 ± 2%	25 - 60 ± 2%	25 - 60 ± 2%
No. 200 (75 µm)	5 - 20 ± 1.5%	5 - 20 ± 1.5%	5 - 20 ± 1.5%

CRUSHED BASE COURSE, TYPE "A"

PERCENTAGE BY WEIGHT PASSING SQUARE MESH SIEVES				
Sieve Size	Grade 5A Target Limits	Job Mix Tolerance	Grade 6A Target Limits	Job Mix Tolerance
2" (50 mm)	100			
1 1/2" (37.5 mm)	97	±3%	100	
3/4" (19.0 mm)	78 - 80	±8%	82 - 88	±8%
3/8" (9.5 mm)	58 - 62	±8%	52 - 64	±12%
No. 4 (4.75 mm)	42 - 50	±8%	36 - 48	±12%
No. 40 (425 µm)	14 - 22	±8%	16 - 24	±10%
No. 200 (75 µm)	3 - 5	±3%	3 - 5	±3%

CRUSHED BASE COURSE, TYPE "B"

PERCENTAGE BY WEIGHT PASSING SQUARE MESH SIEVES			
Sieve Size	Grade 1	Grade 2	Grade 3
2" (50 mm)	100 - 2%		
1 1/2" (37.5 mm)		100 - 2%	
1" (25 mm)	50 - 80 ± 2%		100 - 2%
No. 4 (4.75 mm)	20 - 50 ± 2%	25 - 55 ± 2%	30 - 60 ± 2%
No. 10 (2.00 mm)			20 - 50 □ ± 2%
No. 200 (75 µm)	8 max ± 1.5%	8 max ± 1.5%	8 max ± 1.5%

COVER MATERIAL

PERCENTAGE BY WEIGHT PASSING SQUARE MESH SIEVES					
Sieve Size	Grade 1A	Grade 2A	Grade 3A	Grade 4A	Grade 5A
5/8" (16.0 mm)	100 - 2%				
1/2" (12.5 mm)		100 - 2%	100 - 2%		
3/8" (9.5 mm)	33 - 55 ± 2%	40 - 90 ± 2%	95 - 100 ± 2%	100 - 2%	100 - 2%
No. 4 (4.75 mm)	0 - 15 ± 2%	0 - 15 ± 2%	0 - 30 ± 2%	0 - 30 ± 2%	9 - 50 ± 2%
No. 8 (2.36 mm)	0 - 5 ± 2%	0 - 5 ± 2%	0 - 15 ± 2%	0 - 15 ± 2%	2 - 20 ± 2%
No. 200 (75 µm)	2 max ± 1.5%	2 max ± 1.5%	2 max ± 1.5%	2 max ± 1.5%	2 max ± 1.5%

AGGREGATE FOR CEMENT-TREATED BASE

PERCENTAGE BY WEIGHT PASSING SQUARE MESH SIEVES	
Sieve Size	Job Mix Target Limits
3/4" (19.0 MM)	100 - 2%
No. 4 (4.75 mm)	40 - 70 ± 2%
No. 10 (2.00 mm)	25 - 55 ± 2%
No. 200 (75 µm)	4 - 12 ± 1.5%

FILTER MATERIAL

PERCENTAGE BY WEIGHT PASSING SQUARE MESH SIEVES		
Sieve Size	Gradation No. 1	Gradation No. 2
2" (50 mm)		100 - 2%
11/2" (37.5 mm)		95 - 100 ± 3%
3/4" (19.0 mm)		35 - 70 ± 3%
3/8" (9.5 mm)	100 - 2%	10 - 30 ± 2%
No. 4 (4.75 mm)	95 - 100 ± 2%	5 max ± 2%
No. 8 (2.36 mm)	80 - 100 ± 2%	
No. 16 (1.18 mm)	50 - 85 ± 2%	
No. 30 (600 µm)	25 - 60 ± 2%	
No. 50 (300 µm)	5 - 30 ± 2%	
No. 100 (150 µm)	10 max ± 1.5%	

PLANT MIX SURFACING

PERCENTAGE BY WEIGHT PASSING SQUARE MESH SIEVES				
Sieve Size	Grade A Target Limits	Job Mix Tolerance	Grade B Target Limits	Job Mix Tolerance
3/4" (19.0 mm)	100		100	
1/2" (12.5 mm)	87 - 93	±8%	86 - 90	±7%
3/8" (9.5 mm)	77 - 83	±8%	75 - 79	±7%
No. 4 (4.75 mm)	52 - 58	±7%	51 - 57	±7%
No. 10 (2.00 mm)	36 - 41	±6%	32 - 40	±6%
No. 40 (0.425 mm)	19 - 21	±5%	14 - 16	±4%
No. 200 (75 µm)	6 - 8	±2%	4.5 – 6.5	±1.5%

PLANT MIX SURFACING

PERCENTAGE BY WEIGHT PASSING SQUARE MESH SIEVES		
Sieve Size	Grade D Target Limits	Job Mix Tolerance
3/4" (19.0 mm)	100	
1/2" (12.5 mm)	79 - 83	±7%
3/8" (9.5 mm)	68 - 72	±7%
No. 4 (4.75 mm)	44 - 50	±7%
No. 10 (2.00 mm)	27 - 33	±6%
No. 40 (0.425 mm)	12 - 15	±4%
No. 200 (75 µm)	4.5 – 6.5	±1.5%

BEDDING MATERIAL

PERCENTAGE BY WEIGHT PASSING SQUARE MESH SIEVES	
Sieve Size	Percent Passing
4" (100 mm)	100 - 2%
No. 4 (4.75 mm)	25 - 60 ± 2%
No. 200 (75µm)	0 - 12 ± 1.5%

METHODS OF SAMPLING AND TESTING
MT 227-04
METHOD OF TEST FOR LABORATORY DETERMINATION OF MOISTURE CONTENT OF SOILS (MODIFIED AASHTO T 265)

1 Scope:

1.1 This method covers the laboratory determination of the moisture content of soils.

1.2 The following applies to all specified limits in this standard: For the purposes of determining conformance with theses specifications, an observed value or a calculated value shall be rounded off "to the nearest unit" in the last right-hand place of figures used in expressing the limiting value, in accordance with AASHTO R 11.

2 Referenced Documents:

2.1 ***AASHTO:***
T 265 Laboratory Determination of Moisture Content of Soils

3 Definition:

3.1 *Moisture or Water Content of Soil* – The ratio, expressed as a percentage, of the mass of water in a given mass of soil to the mass of the solid particles. Practical application is to determine the mass of water removed by drying the moist soil to a constant mass in a drying oven controlled at 110 ± 5ºC (230 ± 9ºF) and to use this value as the mass of water in the given soil mass. The mass of the soil remaining after oven drying is used as the mass of the solid particles.

4 APPARATUS:

4.1 *Drying Oven* – thermostatically controlled, preferably of the forced-draft type, capable of being heated at a temperature of 110 ± 5ºC (230 ± 9ºF).

4.2 *Balance* – The balance shall have sufficient capacity, be readable to 0.1 percent of the sample mass, or better, and conform to the requirements of AASHTO M 231.

4.3 *Containers* – Suitable containers made of material resistant to corrosion and not subject to change in mass or disintegration on repeated heating and cooling. Containers shall have close fitting-lids to prevent loss of moisture from samples before initial weighing and to prevent absorption of moisture from the atmosphere following drying and before final weighing. One container is needed for each moisture content determination.

5 Test Sample:

5.1 Select a represenitive quantity of moist soil in the amount indicated in the method of test. If no amount is indicated, the minimum mass of the sample shall be in accordance with the following table:

Maximum Particle Size	Minimum Mass of Sample, g
0.425- mm (No. 40 sieve)	10
4.75-mm (No. 4 sieve)	100
12.5-mm (1/2 in.)	300
25.0-mm (1 in.)	500
50-mm (2 in.)	1000

6 Procedure:

6.1 Weigh a clean, dry container with its lid, and place the moisture content sample in the container. Replace the lid immediately, and weigh the container, including the lid and moist sample. Remove the lid and place the container with the moist sample in the drying oven maintained at a temperature of 110 ± 5ºC (230 ± 9ºF) and dry to a constant mass (Notes 1 and 2). Immediately upon removal from the oven, place the lid on the container and allow the sample to cool to room temperature. Weigh the container including the lid and the dried sample (Notes 3 and 4).

Note 1 – Checking every moisture content sample to determine that it is dried to a constant mass is impractical. In most cases, drying of a moisture content sample overnight (15 or 16 hours) is sufficient. In cases where there is no doubt concerning the accuracy of overnight drying, drying should be continued until the mass after two successive periods of drying indicates no change in mass. Samples of sand may often be dried to constant mass in a period of several hours. Since dry soil may absorb moisture from wet samples, dried samples should be removed before placing wet samples in the oven.

Note 2 – Oven-drying at 110 ± 5ºC (230 ± 9ºF) does not result in reliable moisture content values for soil containing gypsum or other minerals having loosely bound water from hydration or for soil containing significant amounts of organic material. Reliable moisture content values for these soils can be obtained by drying in an oven at approximately 60ºC (140ºF), or by vacuum desiccation at a pressure of approximately 10 mm Hg and at a temperature not lower than 23ºC (73ºF).

Note 3 – A container without a lid may be used provided the moist sample is weighed immediately after being taken and providing the dried sample is weighed immediately after being removed from the oven or after cooling in a desiccator.

Note 4 – Moisture content samples should be discarded and should not be used in any other tests.

7 CALCULATION:

7.1 Calculate the moisture content of the soil as follows:

w = [(mass of moisture)/(mass of oven-dry soil)] x 100 = $[(W_1 - W_2)/(W_2 - W_c)]$ x 100

where:

w = moisture content, percent,

W_1 = moisture content and moist soil, g,

W_2 = mass of container and oven-dried soil, g, and

W_c = mass of container, g.

7.2 Calculate the percent of moisture content to the nearest 0.1 percent.

METHODS OF SAMPLING AND TESTING
MT 228-13
METHOD OF ESTABLISHING FIELD TARGET DENSITY FOR CEMENT TREATED BASE DENSITY CONTROL

1 Scope:

1.1 This method is the procedure for establishing the field target density and moisture for compaction control of cement treated base (CTB).

2 Referenced Documents:

2.1 ***MT Materials Manual:***
MT 211 Moisture-Density Relations of Soil-Cement Mixtures
MT 216 Method of Sampling and Testing Cement Treated Base

3 Procedure:

3.1 At the start of CTB production, use the maximum density and optimum moisture determined by MT 211 and provided in the mix design as the target for compaction control.

3.2 When samples for MT 216 have been taken, use the specimens molded for compressive strength to determine density. Use the average density of the three specimens to represent each sample. Use additional material taken for MT 216 to determine moisture content. Once the field density and moisture have been determined for two samples, average the results. If the average results in an increase of 1.0 pounds per cubic foot (16.0 kg per cubic meter) or greater or a decrease of 1.5 pounds per cubic foot (24.0 kg per cubic meter) or greater, calculate a new maximum density and optimum moisture in accordance with MT 211 for the material produced. Apply the new maximum density retroactive to the start of CTB production on the project. Do not change the target moisture unless a new optimum moisture is determined by MT 211.

3.3 When field densities on four samples have been completed, average the four test values. If the average results in an increase of 0.5 pound per cubic foot (8.0 kg per cubic meter) or greater or a decrease of 1.0 pound per cubic foot (16.0 kg per cubic meter) or greater, calculate a new maximum density and optimum moisture in accordance with MT 211 for the material produced. Apply the new maximum density to all subsequent CTB produced. Do not change the target moisture unless a new optimum moisture is determined by MT 211.

3.4 As each additional field density and moisture is completed, add the results to the results of the previous three densities and moistures, and average. If the average results in an increase of 0.5 pound per cubic foot (8.0 kg per cubic meter) or greater or a decrease of 1.0 pound per cubic foot (16.0 kg per cubic meter) or greater, calculate a new maximum density and optimum moisture in accordance with MT 211 for the material produced. Apply the new maximum density to all subsequent CTB produced. Do not change the target moisture unless a new optimum moisture is determined by MT 211.

METHOD OF SAMPLING AND TESTING
MT 229-15
PROCEDURE FOR SOLIDS - WATER - VOIDS RELATIONS OF SOIL MASSES (ZERO-AIR VOIDS)

1 Scope

1.1 This method covers the compaction of soils by using the solids-water-voids (zero-air voids) chart. This method usually applies to the north central, eastern and southeastern areas of Montana but may apply to other areas of the state. It will be the responsibility of the District Materials Supervisor to monitor the applicability of this method.

2 Referenced Documents

AASHTO
T 100 Specific Gravity of Soils

MT Materials Manual
MT 210 Moisture Density Relations of Soils Using a 5.5 Lb. Rammer and a 12 Inch Drop
MT 220 Specific Gravity of Soils
MT 230 Moisture Density Relations of Soils Using a 10 Lb. Rammer and a 18 Inch Drop

3 Procedure

3.1 Air voids are another method used to determine the compaction of soils. The zero-air voids method will usually apply to soils classified from A-4 to A-7. When the zero-air voids method is not applicable, the 95% of maximum density and ±2% of optimum moisture will be used.

3.2 In order for this method to be accurate, it is necessary to find the specific gravity for the soils proposed for use. The most logical time to determine the specific gravity is during the pre-construction soil survey. However, due to the excavation process, which may result in a mixture of various soil strata, it may become necessary to perform additional specific gravity tests once the project is under contract. The specific gravity of soils is determined in accordance with MT 220 (AASHTO T 100). (An average specific gravity is determined for the soil samples secured within any individual project.)

3.3 Individual proctor tests determined during the pre-construction soil survey are plotted on the zero-air voids chart. If the plot of the peaks from the family of proctor curves from the preliminary soil survey falls on a line roughly parallel to the zero-air voids, the zero-air voids method should work. Tests that fall to the left of the 10% air voids line are generally single size granular particle soils or excessively wet condition type soils. With these soils, the 95% of maximum density and ±2% of optimum moisture will be used.

3.4 Tests taken in the field that lie outside, or to the right of the 0% air voids line, not within the band, should be reviewed and treated as a failing test or possibly a bad reading by the density gauge. However, it is unusual to get tests that fall to the right of the 0% line. If tests consistently fall to the right of the 0% line, a specific gravity on the soil in question should be determined in accordance with MT 220, (AASHTO T100). Special Provision covers Proctor tests that plot outside the zero-air voids chart under compaction control. All proctor tests must be plotted on a zero-air voids chart to see if each test fits the zero-air voids chart.

4 Calculations

4.1 Formula for calculating % voids:

$$\%\,Voids = 100 - \left(\left[\frac{d\left(1 + \left[G_s\left({}^{m}/_{100}\right)\right]\right)}{(G_s)(W)}\right] \times 100\right)$$

where:

US Standard

d = Dry Density in lb/ft³

Gs = Specific Gravity

m = % moisture

W = wt of water in lb/ft³ or 62. 42796

Metric

d = Dry Density in Kg/m³

Gs = Specific Gravity

m = % moisture

W = wt of water in Kg/m³ or 1000

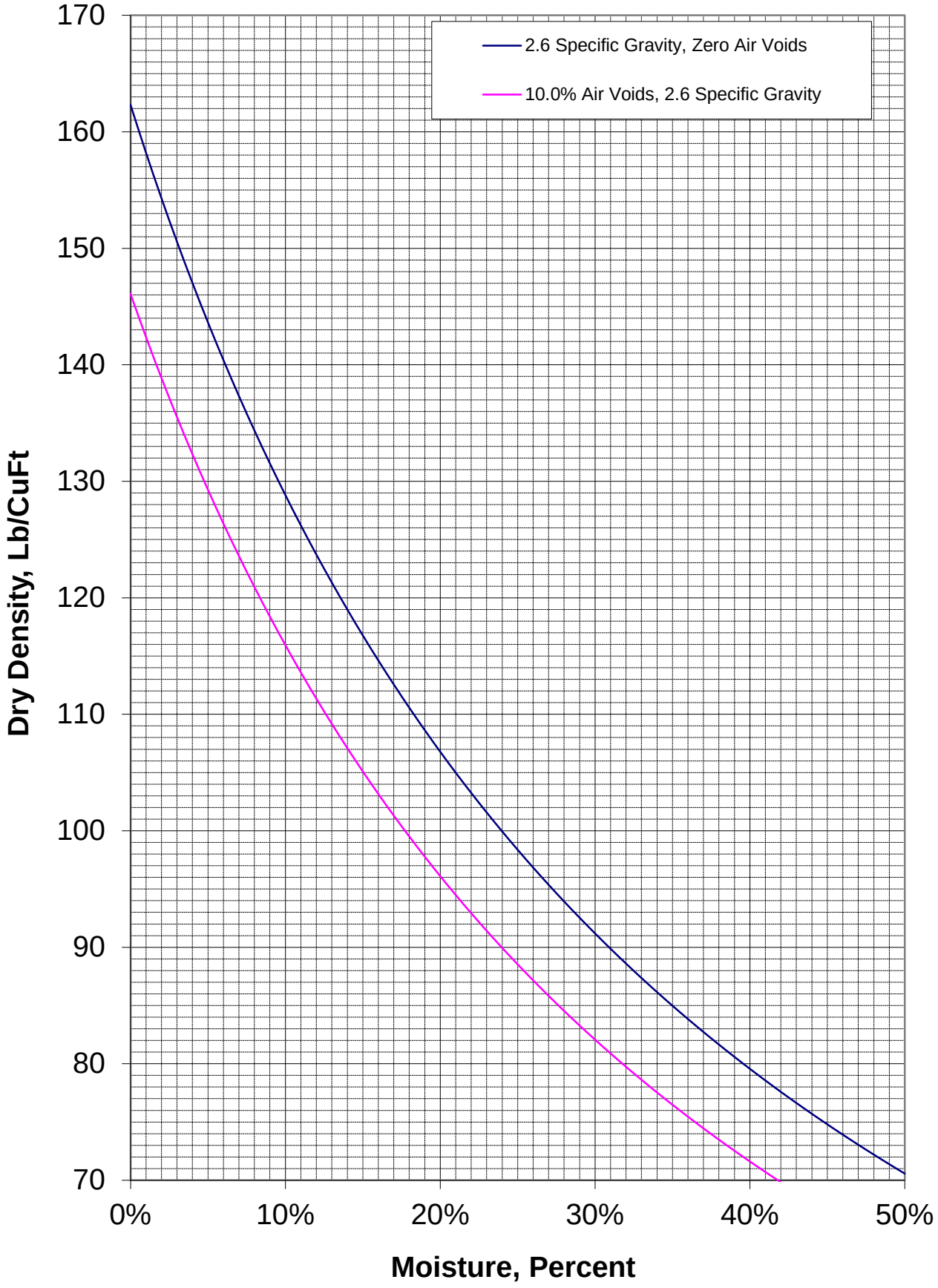
2.6 Specific Gravity, Zero Air Voids
10.0% Air Voids, 2.6 Specific Gravity
Dry Density, Lb/CuFt
170
160
150
140
130
120
110
100
90
80
70
0%
10%
20%
30%
40%
50%
Moisture, Percent

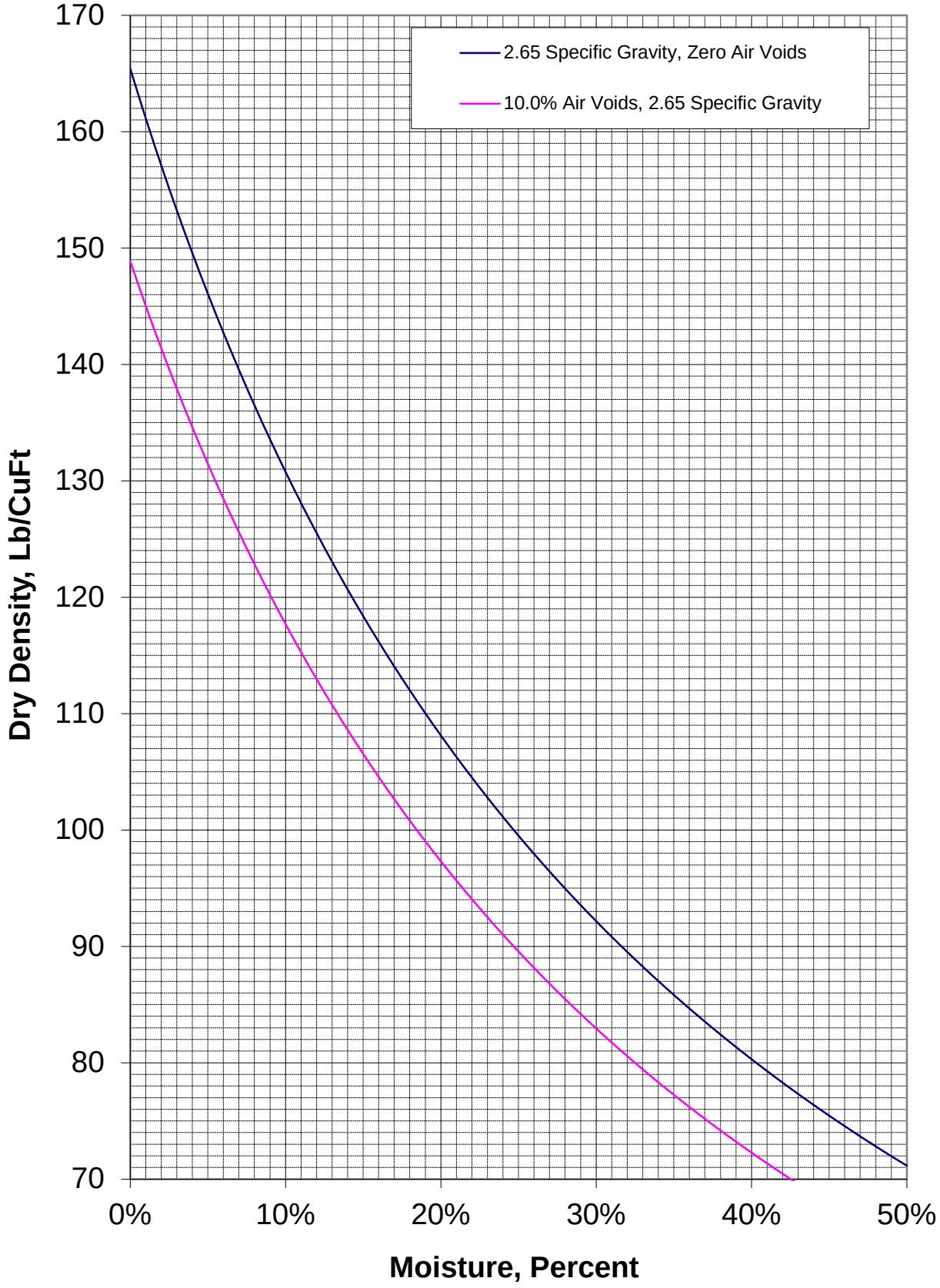
2.65 Specific Gravity, Zero Air Voids
10.0% Air Voids, 2.65 Specific Gravity
Dry Density, Lb/CuFt
170
160
150
140
130
120
110
100
90
80
70
0%
10%
20%
30%
40%
50%
Moisture, Percent

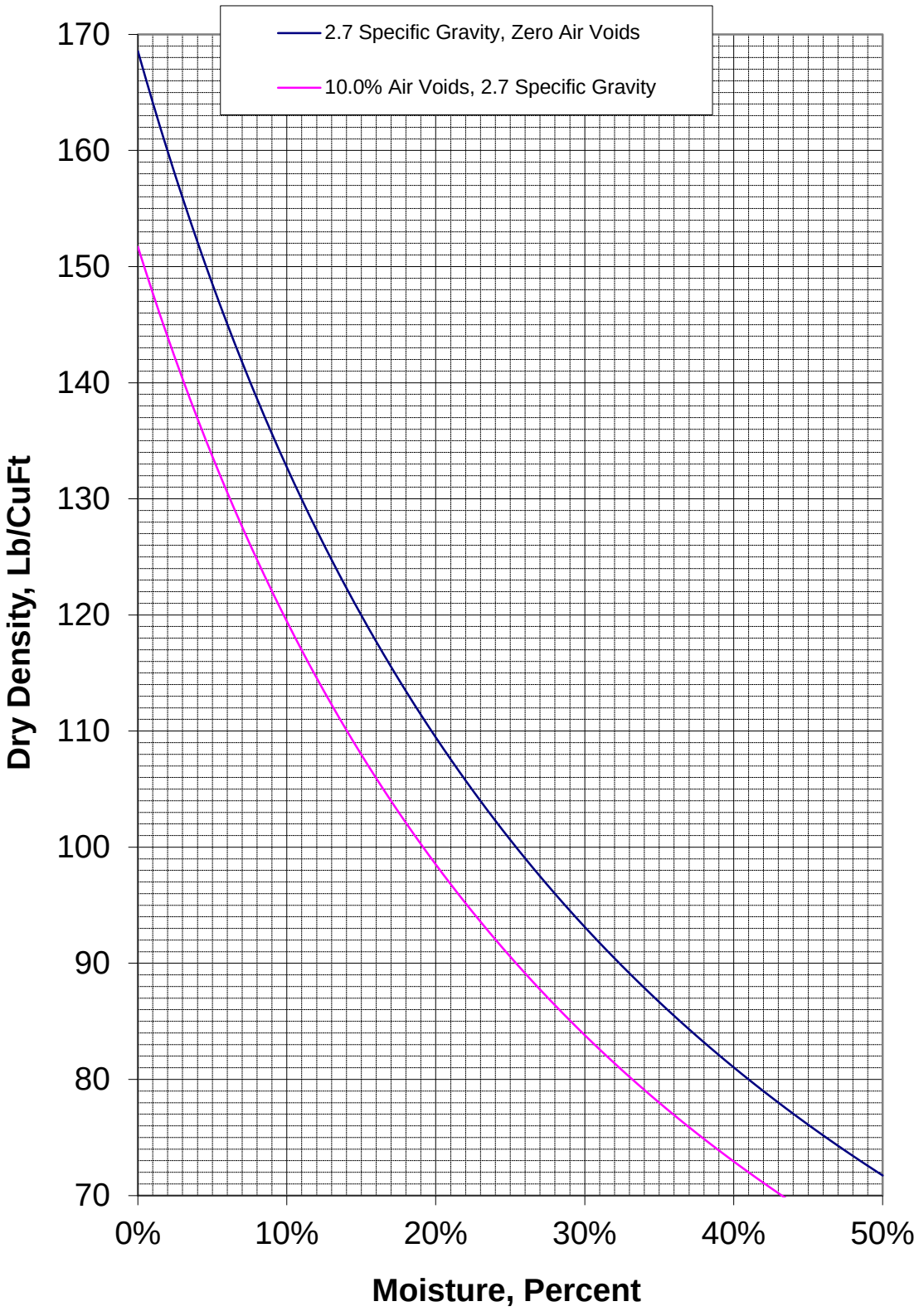
2.7 Specific Gravity, Zero Air Voids
10.0% Air Voids, 2.7 Specific Gravity
170
160
150
140
130
120
110
100
90
80
70
Dry Density, Lb/CuFt
0%
10%
20%
30%
40%
50%
Moisture, Percent

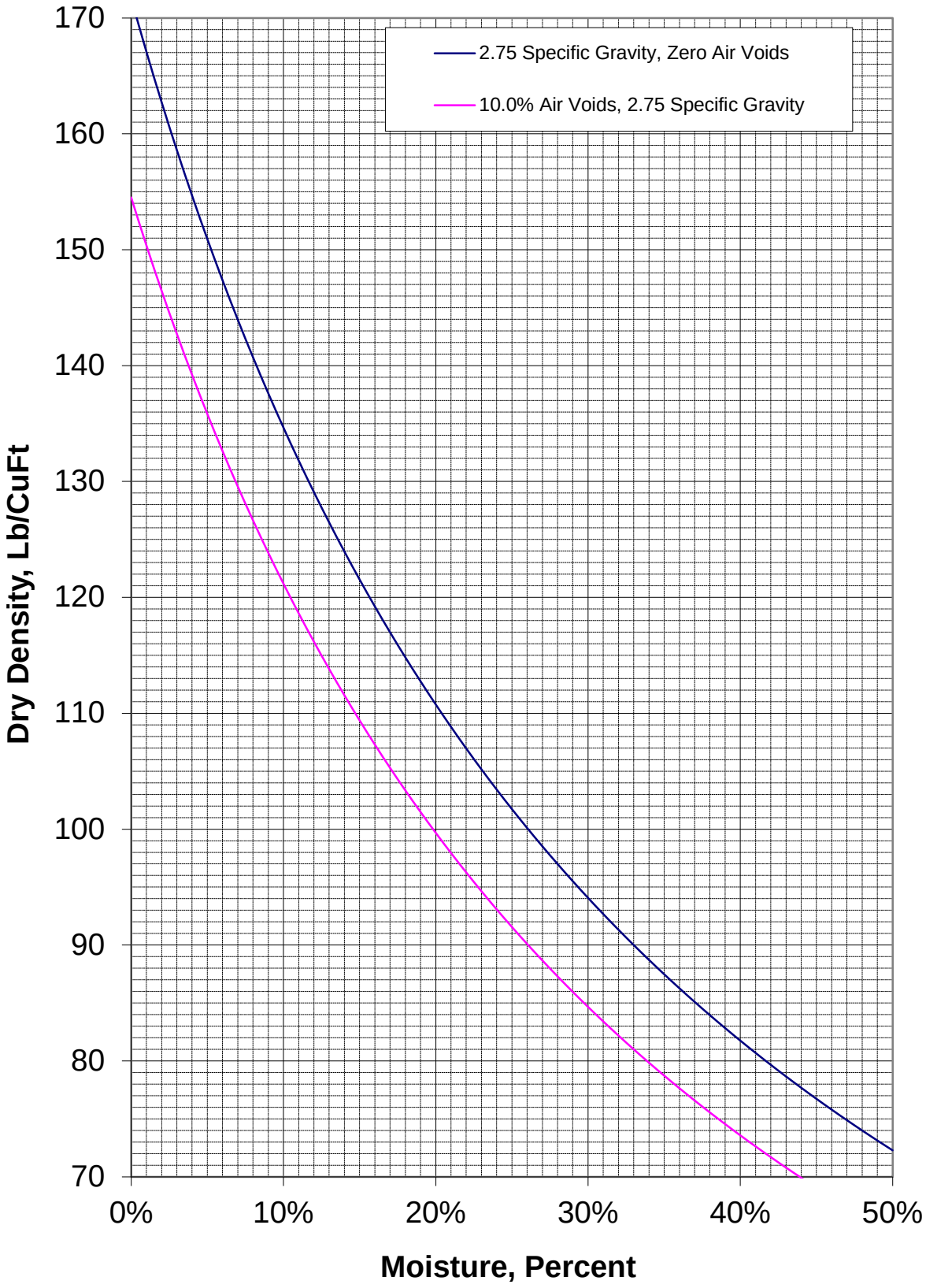
2.75 Specific Gravity, Zero Air Voids
10.0% Air Voids, 2.75 Specific Gravity
Dry Density, Lb/CuFt
170
160
150
140
130
120
110
100
90
80
70
0%
10%
20%
30%
40%
50%
Moisture, Percent

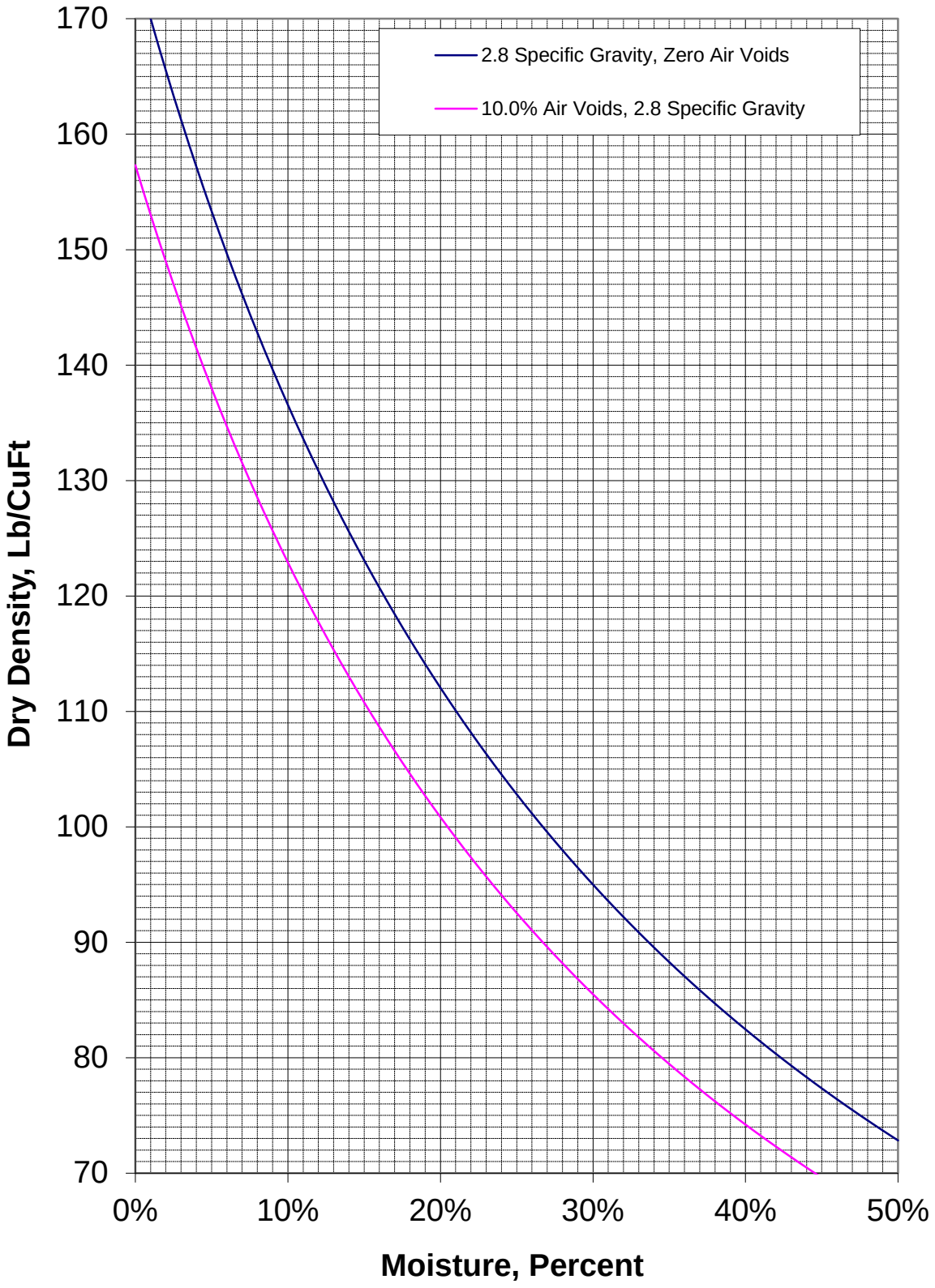
2.8 Specific Gravity, Zero Air Voids
10.0% Air Voids, 2.8 Specific Gravity
Dry Density, Lb/CuFt
170
160
150
140
130
120
110
100
90
80
70
0%
10%
20%
30%
40%
50%
Moisture, Percent

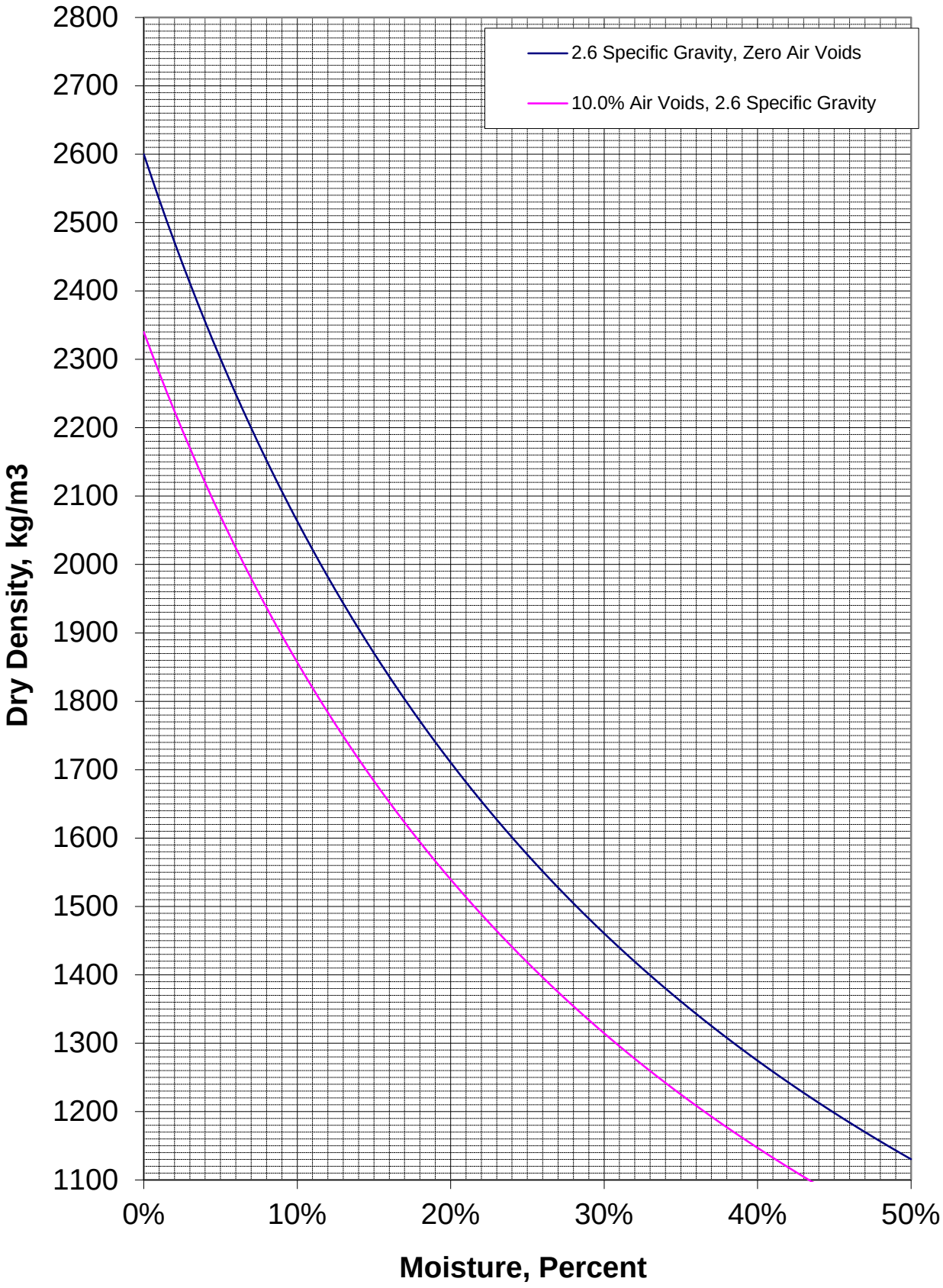
2.6 Specific Gravity, Zero Air Voids
10.0% Air Voids, 2.6 Specific Gravity
Dry Density, kg/m3
2800
2700
2600
2500
2400
2300
2200
2100
2000
1900
1800
1700
1600
1500
1400
1300
1200
1100
0%
10%
20%
30%
40%
50%
Moisture, Percent

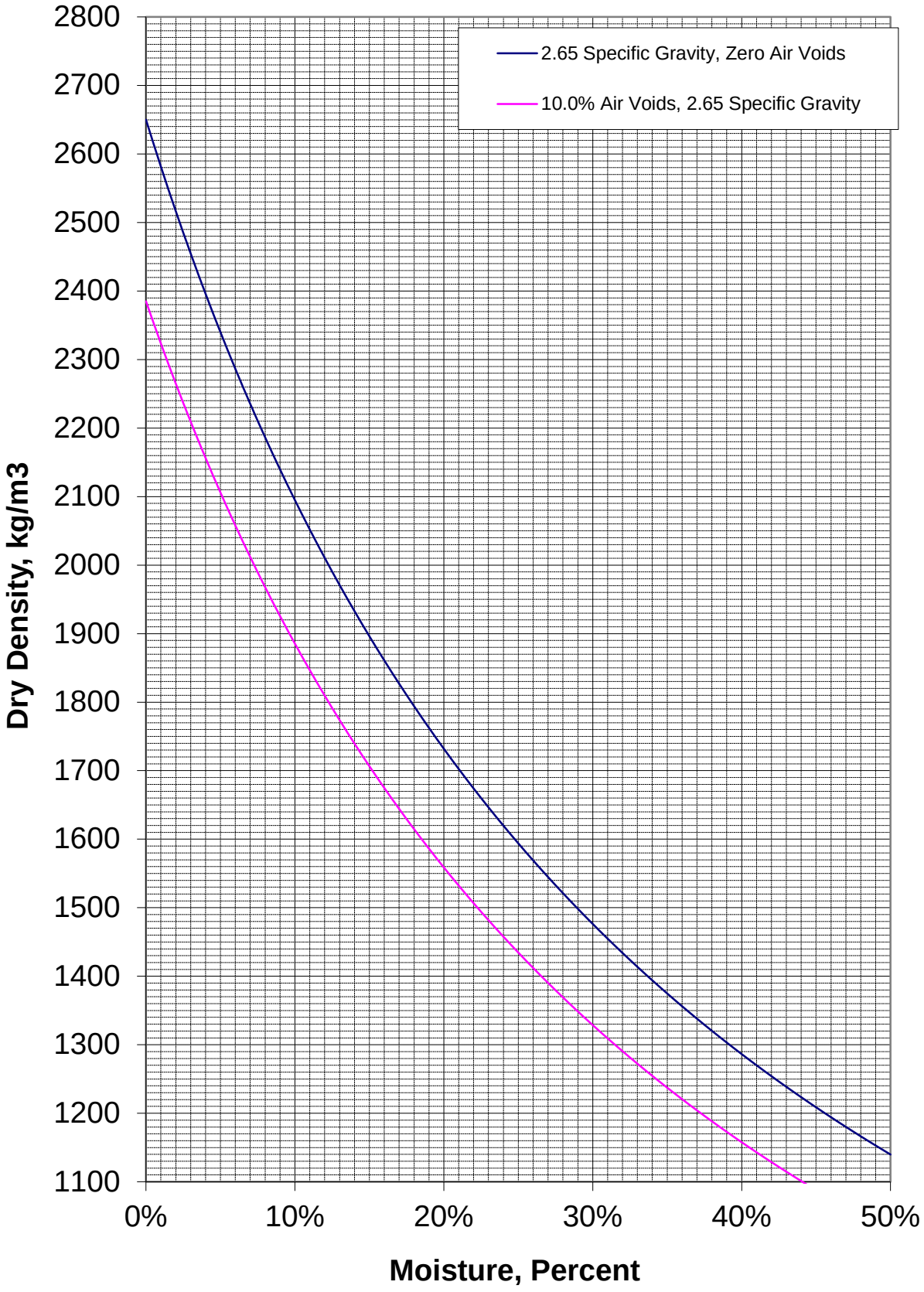
2.65 Specific Gravity, Zero Air Voids
10.0% Air Voids, 2.65 Specific Gravity
Dry Density, kg/m3
2800
2700
2600
2500
2400
2300
2200
2100
2000
1900
1800
1700
1600
1500
1400
1300
1200
1100
0%
10%
20%
30%
40%
50%
Moisture, Percent

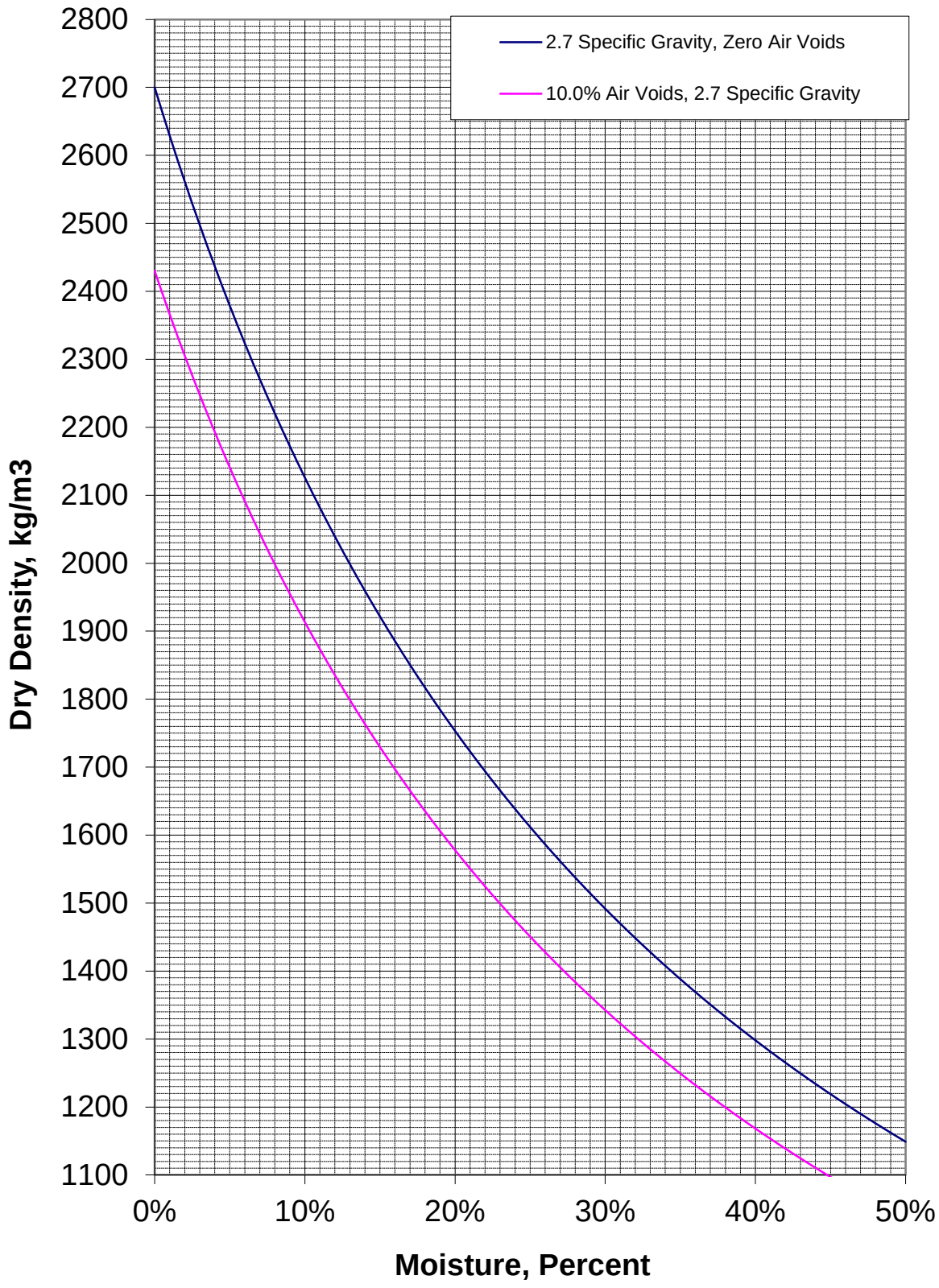
2.7 Specific Gravity, Zero Air Voids
10.0% Air Voids, 2.7 Specific Gravity
Dry Density, kg/m3
2800
2700
2600
2500
2400
2300
2200
2100
2000
1900
1800
1700
1600
1500
1400
1300
1200
1100
0%
10%
20%
30%
40%
50%
Moisture, Percent

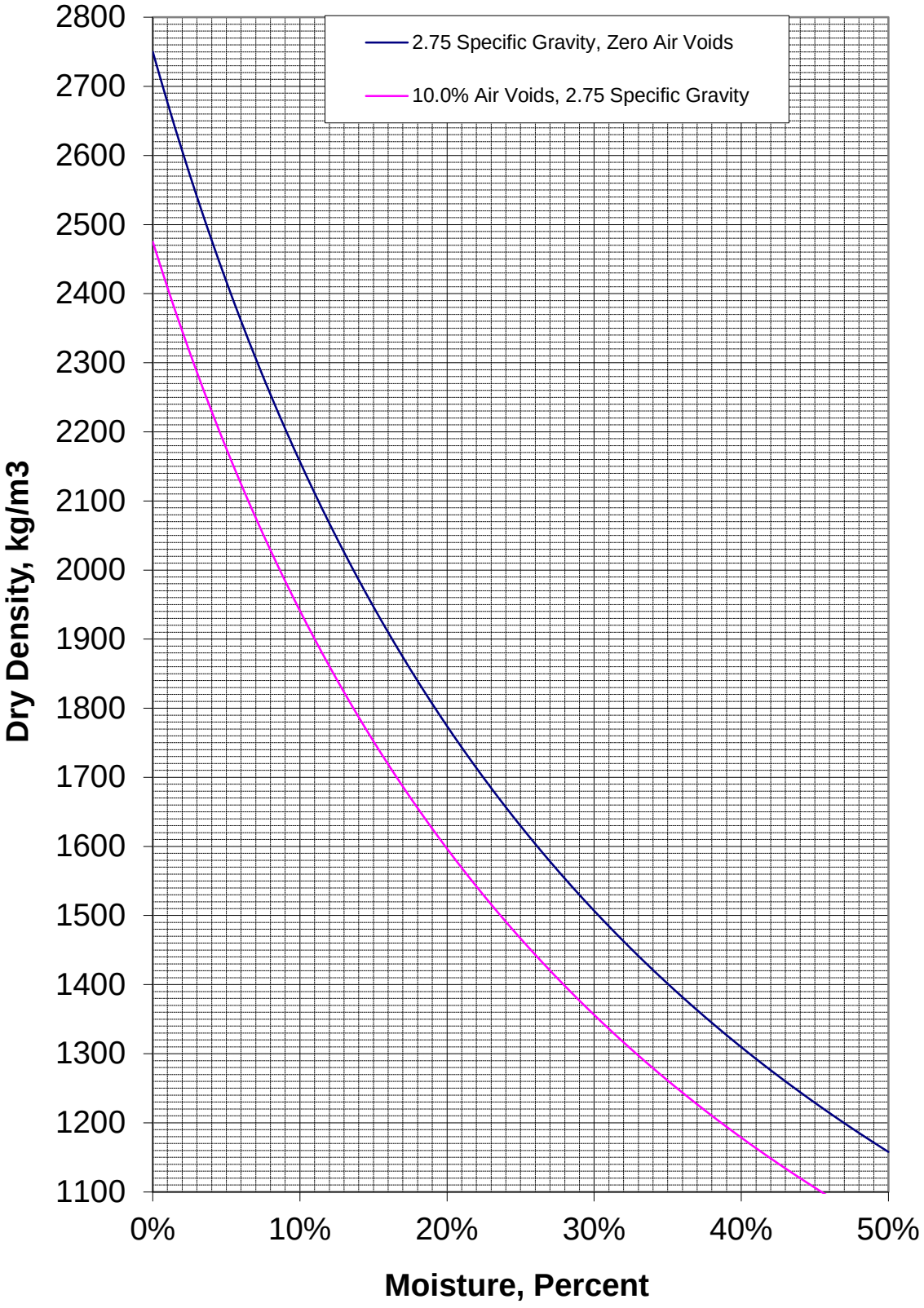
2.75 Specific Gravity, Zero Air Voids
10.0% Air Voids, 2.75 Specific Gravity
Dry Density, kg/m3
2800
2700
2600
2500
2400
2300
2200
2100
2000
1900
1800
1700
1600
1500
1400
1300
1200
1100
0%
10%
20%
30%
40%
50%
Moisture, Percent

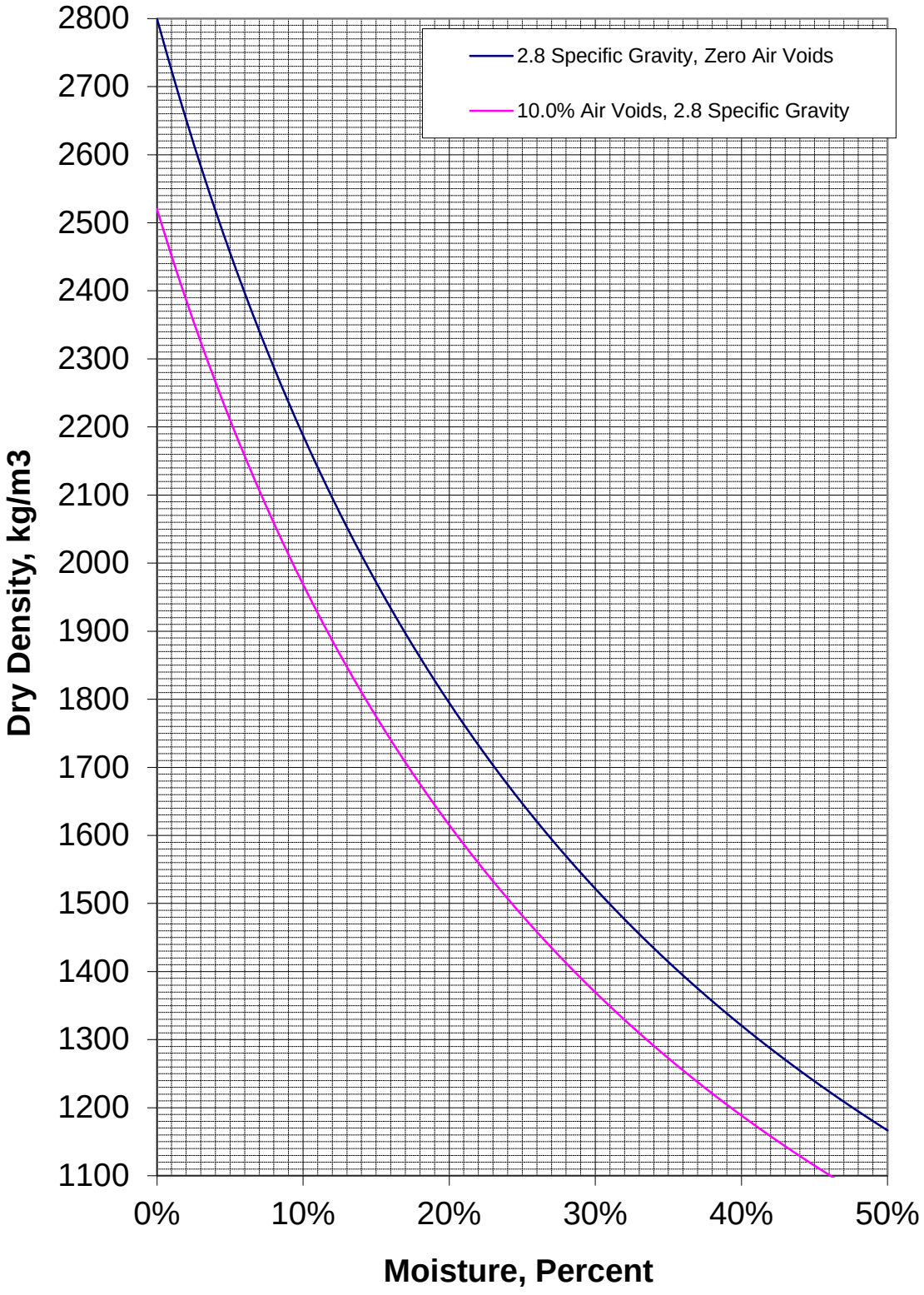
2.8 Specific Gravity, Zero Air Voids
10.0% Air Voids, 2.8 Specific Gravity
Dry Density, kg/m3
2800
2700
2600
2500
2400
2300
2200
2100
2000
1900
1800
1700
1600
1500
1400
1300
1200
1100
0%
10%
20%
30%
40%
50%
Moisture, Percent

METHODS OF SAMPLING AND TESTING
MT 230-08
METHOD OF TEST FOR THE MOISTURE-DENSITY RELATIONS OF SOILS USING A 10 LB. (4.54 KG) RAMMER AND A 18 IN. (457 MM) DROP
(Modified AASHTO T180)

1 Scope:

1.1 These methods of test are intended for determining the relation between the moisture content and density of soils compacted in a mold of a given size with a 10 lb. (4.54 kg) rammer dropped from a height of 18 in. (457 mm). Four alternate procedures are provided as follows:
Method A--A 4 in. (101.60 mm) mold: soil material passing a 4.75 mm (No. 4) sieve Sections 3 and 4.
Method B--A 6 in. (152.40 mm) mold: soil material passing a 4.75 mm (No. 4) sieve Sections 5 and 6.
Method C--A 4 in. (101.60 mm) mold: soil material passing a 19.0 mm (¾ in.) sieve Sections 7 and 8.
Method D--A 6 in. (152.40 mm) mold: soil material passing a 19.0 mm (¾ in.) sieve Sections 9 and 10.

1.2 The method to be used should be indicated in the specifications for the material being tested. If no method is specified, the provisions of Method A shall govern.

1.3 This test method applies to soil mixtures that have 40 percent or less retained on the 4.75 mm (No. 4) sieve, when Method A or B is used and 30 percent or less retained on the 19 mm (3/4 in.) sieve, when Method D or C is used. The material retained on these sieves shall be defined as oversize particles (coarse particles).

1.4 If the test specimen contains oversize particles, and the test specimen is used for field density compaction control, corrections must be made according to MT-231 to compare the total field density with the compacted specimen. The person or agency specifying this method shall specify a minimum percentage of oversize particles below which correction for oversize need not be applied. If no percentage is specified, correction shall be applied to samples with more than five percent by mass of oversize particles.

1.5 If the specified oversized maximum tolerances are exceeded, other methods of compaction control must be used.

Note 1 – One method for the design and control of the compaction of such soils is to use a test fill to determine the required degree of compaction and a method to obtain that compaction. Then use a method specification to control the compaction by specifying the type and size of compaction equipment, the lift thickness and the number of passes.

1.6 The following applies to all specified limits in this standard: For the purposes of determining conformance with these specifications, an observed value or a calculated value shall be rounded off “to the nearest unit” in the last right hand place of figures used I expressing the limiting value, in accordance with AASHTO R 11.

2 Referenced Documents:

2.1 AASHTO:

T180 Moisture-Density Relations of Soils Using a 10 lb. Rammer with a 18 Inch Drop
T224 Coarse Particle Correction
M92 Wire Cloth Sieves for Testing Purposes

2 Referenced Documents: (continued)

MT Manual:
MT-203 Unit Weight of Aggregate
MT-231 Coarse Particle Correction
MT-405 Wire Cloth Sieves for testing Purposes

3 Apparatus:

3.1 *Molds*--The molds shall be solid-wall, metal cylinders manufactured with dimensions and capacities given 3.1.1 and 3.1.2 below. They shall have a detachable collar assembly approximately 2 3/8 in. (60 mm) in height, to permit preparation of compacted specimens of soil-water mixtures of the desired height and volume. The mold and collar assembly shall be so constructed that it can be fastened firmly to a detachable base plate made of the same material (Note 2).

Note 2 - Alternate types of molds with capacities as stipulated herein may be used, provided the test results are correlated with those of the solid-wall mold on several soil types and the same moisture-density results are obtained. Records of such correlation shall be maintained and readily available for inspection, when alternate types of molds are used.

3.1.1 A 4 in. Mold having a capacity of 1/30 (0.0333) ± 0.0003 cu. ft. (0.000943 ± 0.000008 m^3) with an internal diameter of 4.000 ± 0.016 in. (101.6 ± 0.41 mm) and a height of 4.584 ± 0.005 in. (116.43 ± 0.13 mm).

3.1.2 A 6 in. Mold having a capacity of 1/13.33 (0.07500 ± 0.00075 cu. ft. (0.002124 ± 0.000021 m^3) with an internal diameter of 6.000 ± 0.026 in. (152.40 ± 0.66 mm) and a height of 4.584 ± 0.005 in. (116.43 ± 0.13 mm).

3.1.3 *Molds Out of Tolerance Due to Use*--A mold that fails to meet manufacturing tolerances after continued service may remain in use provided those tolerances are not exceeded by more than 50 percent; and the volume of the mold, calibrated in accordance with par 4 (Calibration of Measure) of MT-203, for Unit Weight of Aggregate, is used in the calculations.

3.2 Rammer:

3.2.1 *Manually Operated*--Metal rammer having a flat circular face of 2.000 ± 0.01 in. (50.80 ± 0.25 mm) diameter, a wear tolerance of 0.01 in. (.025 mm) and weighing 10.00 ± 0.02 lb, (4.536 ± 0.009 kg). The rammer shall be equipped with a suitable guide-sleeve to control the height of drop to a free fall of 18.00 ± 0.06 (or 1/16) in. (457 ± 2mm) above the elevation of the soil. The guide-sleeve shall have at least 4 vent holes, no smaller than 3/8 in. (9.5 mm) diameter spaced approximately 90 deg. (1.57 rad) apart and approximately ¾ in. (19 mm) from each end; and shall provide sufficient clearance so the free fall of the rammer shaft and head is unrestricted.

3.2.2 *Mechanically Operated*--A metal rammer which is equipped with a device to control the height of drop to a free fall of 18.00 ± 0.06 (or 1/16) in. (457 ± 2 mm) above the elevation of the soil and uniformly distributes such drops to the soil surface. The rammer shall have a flat circular face 2.000 ± 0.01 in. (50.80 ± 0.25 mm) diameter, a wear tolerance of 0.01 in. (0.25 mm) and a manufactured mass of 10.00 ± 0.02 lb. (4.536 ± 0.009 kg) (Note 2). The mechanical rammer shall be calibrated, by ASTM Method D 2168, to give the same moisture-density results as with a manually operated rammer.

Note 3 -It may be impractical to adjust the mechanical apparatus so the free fall is 18 in. (457 mm) each time the rammer is dropped, as with the manually operated rammer. To make the adjustment of free fall, the portion of loose soil to receive the initial blow should be slightly compressed with the rammer to establish the point of impact from which the 18 in. (457 mm) drop is determined. Subsequent blows on the layer of soil being compacted may all be applied by dropping the

3.2.1 **Apparatus:** (continued)

rammer from a height of 18 in.

3.2.3 *Rammer Face*--The circular face rammer shall be used but a sector face may be used as an alternative provided the report shall indicate type of face used other than the 2 in. (50.8 mm) circular face and it shall have an area equal to that of the circular face rammer.

3.3 *Sample Extruder*--A jack, lever, frame, or other device adopted for the purpose of extruding compacted specimens from the mold.

3.4 *Balances and Scales*--A balance or scale of at least 25 lb. capacity having a sensitivity and readability to 0.01 lb., or a balance or scale having a capacity of approximately 11.5 kg and a sensitivity and readability to 5 grams. (Note 3) Also, a balance of at least 1 kg capacity with a sensitivity and readability to 0.1 g.

Note 4 - The capacity of the metric balance or scale should be approximately 11.5 kg when used to weigh the 6 in. (152 mm) mold and compacted, moist soil; however, when the 4-in. (102 mm) mold is used, a balance or scale of lesser capacity than the 11.5 kg may be used, if the sensitivity and readability is 5 g.

3.5 *Drying Oven*--A thermostatically controlled drying oven capable of maintaining a temperature of 110 ± 5ºC (230 ± 9ºF) for drying moisture samples.

3.6 *Straightedge*--A hardened-steel straightedge at least 10 in. (250 mm) in length. It shall have one beveled edge, and at least one longitudinal surface (used for final trimming) shall be plane within 0.01 in. per 10 in. (0.1 percent) of length within the portion used for trimming the soil (Note 4).

Note 5 - The beveled edge may be used for final trimming if the edge is true within a tolerance of 0.25 mm per 250 mm (0.001 in. per 10 in.) (0.1 percent) of length; however, with continued use, the cutting edge may become excessively worn and not suitable for trimming the soil to the level of the mold. The straightedge should not be so flexible that trimming the soil with the cutting edge will cause a concave soil surface.

3.7 *Sieve*-- 2-in. (50 mm), ¾-in. (19.0 mm), and No. 4 (4.75 mm) sieves conforming to the requirements of MT-405, (AASHTO M 92), Sieves for Testing Purposes.

3.8 *Mixing Tools*--Miscellaneous tools such as mixing pan, spoon trowel, spatula, etc., or a suitable mechanical device for thoroughly mixing the sample of soil with increments of water.

3.9 *Containers*--Suitable containers made of material resistant to corrosion and not subject to change in weight or disintegration on repeated heating and cooling. Containers shall have close-fitting lids to prevent loss of moisture from samples before initial weighing and to prevent absorption of moisture from the atmosphere following drying and before final weighing. One container is needed for each moisture content determination.

METHOD A

4 **Sample:**

4.1 If the soil sample is damp when received from the field, dry it until it becomes friable under a trowel. Drying may be in air or by use of drying apparatus such that the temperature of the sample does not exceed 60 C (140 F). Then thoroughly break up the aggregations in such a manner as to avoid reducing the natural size of individual particles.

4.2 Sieve an adequate quantity of the representative pulverized soil over the No. 4, (4.75 mm) sieve. Discard the coarse material, if any, retained on the No. 4, (4.75 mm) sieve.

4 Sample: (continued)

4.3 Select a representative sample, with a mass of approximately 7 lb. (3 kg) or more, of the soil prepared as described in Sections 4.1 and 4.2.

Note 6 – When developing a compaction curve for the free draining soils, such as uniform sands and gravels, where seepage occurs at the bottom of the base plate, taking a representative moisture content sample from the mixing bowl may be preferred in order to determine the amount of moisture available for compaction.

5 Procedure:

5.1 Thoroughly mix the selected representative sample with sufficient water to dampen it to approximately four percentage points below optimum moisture content.

5.2 Form a specimen by compacting the prepared soil in the 4 in. (101.60 mm) mold (with collar attached) in five approximately equal layers to give a total compacted depth of about 5 in. (125 mm). Prior to compaction, place the loose soil into the mold and spread into a layer of uniform thickness. Lightly tamp the soil prior to compaction until it is not in a loose or fluffy state, using either the manual compaction rammer or a similar device having a face diameter of approximately 2 inches (50 mm). Compact each layer by 25 uniformly distributed blows from the rammer
dropping free from a height of 18 in. (457 mm) above the elevation of the soil when a sleeve-type rammer is used, or from 18 in. (457 mm) above the approximate elevation of compacted soil when a stationary mounted type of rammer is used. During compaction, the mold shall rest firmly on a dense, uniform, rigid and stable foundation (Note 5).

Note 7 - Each of the following has been found to be a satisfactory base on which to rest the mold during compaction of the soil: A block of concrete, weighing not less than 200 lb. (90 kg), supported by a relatively stable foundation; a sound concrete floor; and for field application, such surfaces as found in concrete box culverts, bridges, and pavements.

5.2 Following compaction, remove the extension collar, carefully trim the compacted soil even with the top of the mold by means of the straightedge, and weigh the mold and moist soil in pounds, to the nearest 0.01 lb., or weigh in kilograms to the nearest 5 grams. For molds conforming to tolerances given in Section 2.1.1 and masses recorded in pounds, multiply the mass of the compacted specimen and the mold, minus the mass of the mold, by 30, and record the result as the wet density, W_1, in pounds per cubic foot, of compacted soil. For molds conforming to tolerances given in Section 2.1.1 and masses recorded in kilograms, multiply the mass of the compacted specimen and the mold, minus the mass of the mold, by 1060, and record the result as the wet density, W_1, in kilograms per cubic meter, of compacted soil. For used molds out of tolerance by not more than 50 percent (2.1.3), use the factor for the molds as determined in accordance with Section 6 (Calibration of Measure), MT-203.

5.3 Remove the material from the mold and slice vertically through the center. Take a representative sample of the material from one of the cut faces, weigh immediately, and dry in an oven at 110 ± 5°C (230 ± 9°F) for at least 12 hours, or to a constant mass to determine the moisture content. The moisture sample shall weigh not less than 100 g.

5.4 Thoroughly break up the remaining portion of the molded specimen until it will pass a No. 4, (4.75 mm) sieve as judged by eye, and add to the remaining portion of the sample being tested. Add water in sufficient amount to increase the moisture content of the soil by one or two percentage points, and repeat the above procedure for each increment of water added. Continue this series of determinations until there is either a decrease or no change in the wet unit mass. W_1, per cubic foot or cubic meter of the compacted soil (Note 7).

5 Procedure: (continued)

Note 8 - This procedure has been found satisfactory in most cases. However, in instances where the soil material is fragile in character and will reduce significantly in grain size due to repeated compaction, and in cases where the soil is a heavy-textured clayey material into which it is difficult to incorporate water, a separate and new sample shall be used in each compaction test. In these cases, separate samples shall be thoroughly mixed with amounts of water sufficient to cause the moisture contents of the samples to vary by approximately two percentage points. The moisture points selected shall bracket the optimum moisture content, thus providing samples which when compacted will increase in mass to the maximum density and then decrease in mass. The samples of soil-water mixtures shall be placed in covered containers and allowed to stand for not less than 12 h before making the moisture-density test.

5.4.1 In instances where the soil material is fragile in character and will be reduced significantly in grain size by repeated compaction, a separate and new sample shall be used in each compaction test.

METHOD B

6 Sample:

6.1 Select the representative sample in accordance with 3.3, except that it shall have a mass of approximately 16 lb. (7 kg).

7 Procedure:

7.1 Follow the same procedure as described for Method A in Section 5, except for the following: Form a specimen by compacting the prepared soil in the 6-in. (152.40 mm) mold (with collar attached) in five approximately equal layers to give a total compacted depth of about 5 in. (125 mm), each layer being compacted by 56 uniformly distributed blows from the rammer. For molds conforming to tolerances in 2.1.2, and masses recorded in pounds, multiply the mass of the compacted specimen and the mold, minus the mass of the mold, by 13.33, and record the result as the wet density, W_1, in lb. ft.^{3}, of the compacted soil. For molds conforming to tolerances given in 2.1.2 and masses recorded in kilograms, multiply the mass of the compacted specimen and the mold, minus the mass of the mold, by 471, and record the results as the wet density, W_1, in kg/m^3, of compacted soil. For used molds out of tolerance by not more than 50 percent (3.1.3), use the factor for the mold as determined in accordance with Section 6 (Calibration of Measure), MT-203.

METHOD C

8 Sample:

8.1 If the soil sample is damp when received from the field, dry it until it becomes friable under a trowel. Drying may be in air or by use of drying apparatus such that the temperature does not exceed 60 C (140ºF). Then thoroughly break up the aggregations in such a manner as to avoid reducing the natural size of individual particles.

8.2 Sieve an adequate quantity of the representative pulverized soil over the ¾-in., (19.0 mm) sieve. Discard the coarse material if any, retained on the ¾-in., (19.0 mm) sieve (Note 9).

Note 9 The use of the replacement method previously specified, where the oversized particles are replaced with finer particles, to maintain the same percentage of coarse material, is not considered appropriate to compute the maximum density.

8.3 Select a representative sample, having a mass of approximately 12 lb. (5 kg) or more, of the soil prepared as described in 8.1 and 8.2.

9.1 Thoroughly mix the selected representative sample with sufficient water to dampen it to approximately 4 percentage points below optimum moisture content.

9 **Procedure:** (continued)

9.2 Form a specimen by compacting the prepared soil in the 4 in. (101.60 mm) mold (with collar attached) in five approximately equal layers to give a total compacted depth of about 5 in. (125 mm). Compact each layer by 25 uniformly distributed blows from the rammer dropping free from a height of 18 in. (457 mm) above the elevation of the soil when a sleeve-type rammer is used, or from 18 in. (457 mm) above the approximate elevation of each finally compacted layer when a stationary mounted type rammer is used. During compaction, the mold shall rest firmly on a dense, uniform, rigid and stable foundation (Note 7).

9.2.1 Following compaction, remove the extension collar, carefully trim the compacted soil even with the top of the mold by means of the straightedge. Holes developed in the surface by removal of coarse material shall be patched with smaller size material. Weigh the mold and moist soil in pounds to the nearest 0.01 lb.; or weigh in kilograms to the nearest 5 grams. For molds conforming to tolerances given in Section 2.1.1, and masses recorded in pounds, multiply the mass of the compacted specimen and the mold, minus the mass of the mold, by 30, and record the result as the wet density, W_1, in lb./ft.³, of compacted soil. For molds conforming to tolerances
given in Section 2.1.1 and masses recorded in kilograms, multiply the mass of the compacted specimen and mold, minus the mass of the mold, by 1060, and record the result as wet density, W_1, in kg/m³, of compacted soil. For used molds out of tolerance by not more than 50 percent (3.1.3), use the factor for the mold as determined in accordance with Section 6 (Calibration of Measure), MT-203.

9.3 Remove the material from the mold and slice vertically through the center. Take a representative sample of the material from one of the cut faces, weigh immediately, and dry in an oven at 110 ± 5 C (230 ± 9ºF) for at least 12 hours, or to constant mass, to determine the moisture content. The moisture content sample shall weigh not less than 500 g.

9.4 Thoroughly break up the remainder of the material until it will pass a ¾-in., (19.0 mm) sieve and 90 percent of the soil aggregations will pass a No. 4, (4.75 mm) sieve as judged by eye, and add to the remaining portion of the sample being tested. Add water in sufficient amounts to increase the moisture content of the soil sample by one or two percentage points, and repeat the above procedure for each increment of water added. Continue this series of determinations until there is either a decrease or no change in the wet mass, W_1, per cubic foot or cubic meter of compacted soil (Note 8).

METHOD D

10 **Sample:**

10.1 Select the representative sample in accordance with 8.3 except that it shall have a mass of approximately 25 lb. (11 kg).

11 **Procedure:**

11.1 Follow the same procedure as described for Method C in section 9 except for the following. Form a specimen by compacting the prepared soil in the 6 in. (152.40 mm) mold (with collar attached) in five approximately equal layers to give a total compacted depth of about 5 in. (125 mm), each layer being compacted by 56 uniformly distributed blows from the rammer. For molds conforming to tolerances given in 2.1.2 and masses recorded in pounds, multiply the mass of the compacted specimen and the mold, minus the mass of the mold, by 13.33, and record the results as the wet unit mass, W_1, in lb/ft³, of the compacted soil. For molds conforming to tolerances given in 2.1.2 and masses recorded in kilograms, multiply the mass of the compacted specimen and mold, minus the mass of the mold, by 471, and record the result as the wet unit mass, W_1, in kg/m³ of compacted soil. For used molds out of tolerance by not more than 50 percent (3.1.3), use the

factor for the mold as determined in accordance with Section 6 (Calibration of Measure) MT-203.

CALCULATIONS AND REPORT

12 Calculations:

12.1 Calculate the moisture content and the dry unit mass of the soil as compacted for each trial, as follows:

$$w = \frac{A - B}{B - C} \times 100$$

and

$$W = \frac{W_1}{w + 100} \times 100$$

where:

w = percentage of moisture in the specimen, based on oven dry mass of soil.

A = mass of container and wet soil.

B = mass of container and dry soil.

C = mass of container.

W = dry mass, in pounds per cubic foot of compacted soil, or kilograms per cubic meter of compacted soil, and

W_1 = wet mass, in pounds, per cubic foot of compacted soil or kilograms per cubic meter of compacted soil.

13 Moisture-Density Relationship:

13.1 The calculation in 11.1 shall be made to determine the moisture content and corresponding oven-dry unit mass (density) in pounds per cubic foot or kilograms per cubic meter of the compacted samples. The oven-dry densities (unit weight) of the soil shall be plotted as ordinates and the corresponding moisture content as abscissas.

13.2 *Optimum Moisture Content*--When the densities and corresponding moisture contents for the soil have been determined and plotted as indicated in 12.1, it will be found that by connecting the plotted points with a smooth line, a curve is produced. The moisture content corresponding to the peak of the curve shall be termed the "optimum moisture-content" of the soil under the above compaction.

13.3 *Maximum Density*--The oven-dry density in pounds per cubic foot or kilograms per cubic meter of the soil at optimum moisture content shall be termed "maximum density" under the above compaction.

14 Report:

14.1 The report shall include the following:

14 **Report:** (continued)

14.1.1 The method used (Method A, B, C, or D)

14.1.2 The optimum moisture content, as a percentage, to the nearest whole number

14.1.3.1 The maximum density in lbs. per cu. ft., to the nearest 0.1 lb/ft³ or in kilograms per cubic meter, to the nearest 1 kg.

14.1.3.2 In Methods C and D indicate if the material retained on the 19.0 mm sieve was removed or replaced.

14.1.5 Type of face if other than 2 in. (50.8 mm) circular.

METHOD OF SAMPLING AND TESTING
MT 231-04
PROCEDURE FOR CORRECTION FOR COARSE PARTICLES IN THE SOIL COMPACTION TEST
(Modified AASHTO T 224)

1 Scope:

1.1 This method describes a procedure for adjusting the densities of soil and soil aggregate mixtures to compensate for differing percentages of coarse particles retained on either the 4.75-mm (No. 4) or 19.0-mm (3/4 in.) sieve. This is necessary to adjust either the field wet density to a dry density of the material passing theses sieves or the reverse, by adjusting the lab density to the field density when doing compaction control testing. Comparisons are made by comparing the field densities with the maximum dry density as determined by MT-210 (*AASHTO T 99*) or MT- 230 (*AASHTO T 180*).

1.2 Two methods are available for correction, either, lab to field or field to lab density. The method specified in Section 4.1 adjusts the compacted lab density to the field density. The method specified in Section 4.2 adjusts the field wet density to dry density of the fine fraction and compares its results with the compacted lab density.

1.3 This test method applies to soil mixtures that have 40 percent or less retained on the 4.75-mm (No. 4) sieve, when Method A or B of MT 210 (*AASHTO T 99*) or MT 230 (*AASHTO T 180*) is used, or mixtures that have 30 percent or less retained on the 19.0-mm (3/4 in.) sieve, when Method C or D of MT 210 (*AASHTO T 99*) or MT 230 (*AASHTO T 180*) is used. The material retained on these sieves shall be defined as oversize particles (coarse particles.

1.4 This method applies to soils with any percentage of oversize particles as specified in Section 1.3. However, the correction may not be of practical significance for soils with only a small percentage of oversize particles. The person or agency specifying this method shall specify a minimum percentage of oversize particles below which the method need not be applied. If a minimum percentage is not specified, this method shall be applied to samples with more than 5 percent by weight of oversize particles.

1.5 The following applies to all specified limits in this standard: For the purpose of determining conformance with these specifications, an observed value or a calculated value shall be rounded off to the nearest 10kg/m³ (1 pcf), according to R 11, Recommended Practice for Indicating Which Places of Figures Are to Be considered Significant in Specified Limiting Values.

1.6 The values in SI units are to be considered as the standard.

2 Reference Documents:

2.1 ***AASHTO Standards:***

R 11 Recommended Practice for Indicating Which Places of Figures Are to Be Considered Significant in Specified Limiting Values
T 85 Specific Gravity and Absorption of Coarse Aggregate
T 99 The Moisture-Density Relations of Soils Using a 2.5-kg (5.5 –lb) Rammer and a 305-mm (12-in.) Drop
T 180, Moisture-Density Relations of Soils Using a 4.54-kg (10-lb) Rammer and a 457-mm (18-in) Drop
T 217 Determination of Moisture in Soils by Means of a Calcium Carbide Gas Pressure Moisture Tester
T 255 Total Moisture Content of Aggregate by Drying
T 272 Family of Curves-One Point Method

3 Outline of Method:

3.1 When method A or B of MT-210 or MT-230 is employed, the total field wet density is compared with the dry density of the soil particles passing the 4.75-mm (No. 4) sieve.

3.2 When method C or D of MT-210 or MT-230 is employed, the total field wet density is compared with the dry density of the soil particles passing the 19.0-mm (3/4 in) sieve.

3.3 Significant figures are as follows:

3.3.1 Adjusted wet density of the fine material passing the 4.75-mm (No. 4) sieve, Methods A and B; or 19.0-mm (3/4 in.) sieve, Methods C and D: (D_f) 1 kg/m³ (0.1pcf).

3.3.2 Bulk specific gravity of the coarse material retained on the 4.75-mm (No. 4) sieve, Methods A and B; or 19-mm (3/4 in.) sieve, Methods C and D; (G_m) 0.01.

3.3.3 Percent by mass, of coarse and fine particles, of material retained and passing the 4.75-mm (No. 4) sieve, Methods A and B; or 19.0-mm (3/4 in.) sieve, Methods C and D; (P_c) and (P_f) 0.1 percent.

3.3.4 In-place (field) wet density of the total sample (D) 1 kg/m³ (0.1 pcf).

4 Adjustment Equation:

4.1 *Compacted Laboratory Dry Density Corrected to Field Dry Density*

4.1.1 This section corrects the laboratory density obtained by either MT-210 or MT-230 for the moisture content and density of the material retained on the 4.74-mm (No. 4) sieve, Methods A and B; or the material retained on the 19.0-mm (3/4 in.) sieve, Methods C and D. The maximum laboratory dry density, adjusted for oversized particles and total moisture content are compared with the field dry density and field moisture content. This method is limited to field samples containing 40 percent or less of material retained on the 4.75-mm (No. 4) sieve, Methods A and B, or 30 percent or less of material retained on the 19.0-mm (3/4 in.) sieve, Methods C and D.

4.1.2 Determine the moisture content of the fine particles and oversize particles of the material used during compaction. The moisture contents can be determined by T 265, T 217, or T 255. The moisture content of the oversize material retained on the sieve can be assumed to be two (2) percent for most construction applications. If the moisture content of the oversized material is generally known, substitute the moisture content in the calculations. If drying equipment is available, determine the actual moisture contents. Calculate the moisture contents according to the calculations specified in T 265.

4.1.3 Calculate the dry mass of the coarse and fine particles as follows:

$$M_D = M_M/(1+MC)$$

where:

M_D = mass of dry material (fine or oversize particles).

M_M = mass of moist material (fine or oversize particles).

MC = moisture content of respective fine or oversized particles, expressed as a decimal.

4.1.4 Adjustment Equation: (continued)

Calculate the percentage of the fine particles and oversized particles by dry weight of the total sample as follows:

$P_f = 100\, M_{DF}/(M_{DF} + M_{DC})$

and

$P_C = 100\, M_{DC}/(M_{DF} + M_{DC})$

where:

P_f = percent of fine particles, of sieve used, by weight.

P_C = percent of oversized particles, of sieve used, by weight.

M_{DF} = mass of dry particles and

M_{DC} = mass of oversize particles.

4.1.5 Calculate the corrected moisture content and corrected dry density of the total sample (combined fine and oversize particles) as follows:

$MC_T = (MC_f P_f + MC_C P_C)/100$

where:

MC_T = corrected moisture content of the combined fine and oversized particles, expressed as a decimal.

MC_f = moisture content of the fine particles, expressed as a decimal.

MC_C = moisture content of oversize particles, expressed as a decimal.

and

$D_d = 100\, D_f k/(D_f P_C + k P_f)$

where:

D_d = corrected total dry density (combined fine and oversize particles) kg/m³ (pcf).

D_f = dry density of the fine particles kg/m³ (pcf).

P_C = percent of oversize particles, of sieve used, by weight.

P_f = percent of fine particles, of sieve used, by weight.

K = 1,000 * Bulk Specific Gravity (G_m)(oven dry basis) of coarse particles (kg/m³),
Or 62.4*Bulk Specific Gravity(G_m)(oven dry basis) of coarse particles (pcf).

Note 1 – If the specific gravity has been determined, this value may be used in the calculations. Determine the Bulk Specific Gravity according to T 85. For most construction activities the specific gravity can be assumed to be 2.60.

4 Adjustment Equation: (continued)

4.2 Field Wet Density Corrected to Compacted Laboratory Density

4.2.1 The in-place total (field) wet density is corrected to a dry density of the sample passing the 4.75-mm (No. 4) sieve or the sample passing the 19.0-mm (3/4 in.) sieve. The adjusted dry density is compared with the maximum dry density obtained by methods T 99 or T 180.

4.2.2 Determine the moisture content of the total sample and for the material retained on the sieve used during compaction. Moisture content can be determined by either T 265, T 217 or T 255. If using the nuclear moisture/density gauge, read the moisture content directly from the gauge for the total moisture content. The moisture content of the oversize material retained on the sieve can be assumed to be two (2) percent for most construction applications. If the mosture content of the oversize material is generally known, substitute the moisture content in the calculations. IF drying equipment is available, determine the actual moisture contents. Calculate the moisture contents according to the calculations specified in T 265.

4.2.3 Calculate the moisture content of the fine particles of the field sample as follows:

$MC_f = (100MC_T - MC_C P_C)/P_f$

where:

MC_f = moisture content of the fine particles, expressed as a decimal.

MC_T = moisture content of total field sample, expressed as a decimal.

MC_C = moisture content of the oversize particles, expressed as a decimal.

P_C = percent of oversize particles, of sieve used, by weight.

P_f = percent of fine particles, of sieve used, by weight.

4.2.4 Calculate the dry field density of the sample as follows:

$D_d = D/(1+MC_T)$

where:

D_d = dry field density of total sample, kg/m³ (pcf).

D = total field wet density, kg/m³ (pcf).

MC_T = moisture content of total field sample, expressed as a decimal.

4.2.5 Calculate the dry field density of the fine particles of the field sample as follows:

$D_f = D_d P_f/(100-((D_d P_C)/k)))$

where:

D_f = adjusted dry density of the fine particles, kg/m³ (pcf).

D_d = total field dry density, kg/m³ (pcf).

4 Adjustment Equation: (continued)

P_f = percent of fine particles, of sieve used, by weight.

P_C = percent of oversize particles, of sieve used, by weight.

k = 1,000*Bulk Specific Gravity (G_M)(oven dry basis) of coarse particles (kg/m³),
or 62.4* Bulk Specific Gravity (G_M)(oven dry basis) of coarse particles (pcf), (Note 1).

5 Precision:

5.1 Since this correction for coarse particles involves no testing but instead utilizes the results of other tests and mathematically combines the results, determination of the precision and accuracy is not applicable.

APPENDIX:

A1 NOTES:

A1.1 These methods, described for coarse particle correction, are applicable to one type of soil and soil-aggregate material only. If the characteristic of the material changes, then a moisture/density relationship (T 99 or T 180) test is performed to determine a new maximum density.

A1.2 T 272 describes the methods for determining different maximum densities of soil and soil-aggregate materials which reveal certain similarities and trends characteristic of the material type and source.

A1.3 *UTILIZATION OF A FAMILY OF CURVES* – When using the One Point Method (T 272), Note 3 does not apply. The percentage of oversize particles, when performing the density of soil and soil-aggregate in-place, must be determined to adjust the T 99 or T 180 maximum density to compensate for this percentage.

METHOD OF SAMPLING AND TESTING
MT 232-04
SOIL CORROSION TEST
(Montana Method)

1. Scope:

1.1 This test method covers procedures and apparatus for determining the pH, conductivity and sulfate content of a soil in corrosion testing.

1.2 The principle use of these tests is to supplement soil-resistivity measurements and thereby identify conditions under which the corrosion of metals in soil may be accentuated.

2. Apparatus:

2.1 *Sieves* – A series of sieves of the following sizes: 1/4 in. (6.3 mm), No. 4 (4.75 mm), No. 10 (2.00 mm) and a pan.

2.2 *Balance* – A balance readable to 0.1 percent of the sample mass, or better, and conforming to the requirements of AASHTO M 231.

2.3 *Drying Apparatus* – A suitable device capable of drying samples at a temperature of 140°F (60°C).

2.4 *Pulverizing Apparatus* – Either a mortar and a rubber-covered pestle or any device suitable for breaking up the aggregations of soil particles without reducing the size of the individual grains.

2.5 *Sample Splitter* – A suitable riffle sample splitter or sample splitter for proportional splitting of the sample and capable of obtaining representative portions of the sample without appreciable loss of fines. The width of the container used to feed the riffle splitter should be equal to the total combined width of the riffle chutes. Proportional splitting of the sample on a canvas cloth is also acceptable.

2.6 *pH Meter* – With electrodes suitable for laboratory analysis.

2.7 *Standard Buffer Solutions* – Buffer solutions with known pH values of 4.0, 7.0, 10.0.

2.8 *Beakers* – 100 ml and 250 ml wide mouth glass beakers with a watch glass for cover.

2.9 Glass stirring rods.

2.10 *Conductivity Meter* - Suitable for laboratory or field analysis.

2.11 *Muffle Furnace* – The muffle furnace shall be capable of operation at the temperatures required and shall have an indicating pyrometer accurate within ±25°C, as corrected, if necessary, by calibration.

2.12 *Platinum Crucible* – Platinum crucibles for ordinary chemical analysis should preferably be made of pure unalloyed platinum of 15 to 30-ml capacity. Where alloyed platinum is used for greater stiffness or to avoid sticking of crucible and lid, the alloyed platinum should not decrease in mass by more than 0.2 mg when heated at 1200°C for one hour.

2.13 *Filter Paper* – Fast filter paper (Whatman #41) and slow filter paper (Whatman #42).

3 Sample Preparation:

3.1 The sample as received shall be in a moist condition for pH purposes. If the sample is too wet, it may be dried to a moist condition in air or a drying apparatus not to exceed 140°F (60°C) prior to sample selection (Note 1). A representative test sample to perform the pH test shall then be obtained with a sampler or by splitting or quartering.

3 Sample Preparation: (continued)

Note 1 – Samples dried in an oven or other drying apparatus at a temperature not exceeding 140°F (60°C) are considered to be air dried.

3.2 The portion of the sample selected for pH testing shall be separated into fractions by one of the following methods:

4. Determination of pH:

4.1 Place sufficient soil into a 100 ml glass beaker or other suitable container to fill to the 80 ml mark.

4.2 Stir a sufficient amount of distilled water into the sample to produce a soil slurry and then cover with a watch glass.

4.3 Let the sample stand for a minimum of one hour, stirring every 10 to 15 minutes. This is to allow the pH of the soil slurry to stabilize.

4.4 Measure the temperature of the soil and adjust the temperature controller of the Ph meter to that of the sample temperature. This adjustment should be done just prior to testing.

4.5 Stabilize the pH meter by means of the standard solutions provided.

4.6 Stir the sample with a glass rod immediately before immersing the electrode into the soil slurry solution and gently turn the beaker or container to make good contact between the solution and the electrode. **DO NOT** place the electrode into the soil, only into the soil slurry solution.

4.7 Immerse the electrode in the solution for at least 30 seconds to allow the meter to stabilize. If the meter has an auto read system, it will automatically signal when stabilized.

4.8 Read and record the pH value to the nearest tenth of a whole number.

4.9 Rinse the electrode well with distilled water, then dab lightly with tissues to remove any film formed on the electrode. ***Caution:*** *Do not wipe the electrode as this may result in polarization of the electrode and consequent slow response.*

4.10 Add approximately 1 gram of calcium carbonate ($CaCO_3$) to the soil slurry and set aside for approximately 24 hours and determine the marble pH according to sections 4.4 to 4.9.

5. Determination of Conductivity:

5.1 Place a sufficient amount of soil on a 100 mm watch glass to completely cover the watch glass and let stand overnight to allow the sample to dry.

5.2 Sieve the dry sample over a No. 10 sieve (2.00 mm) and then pulverize with a mortar and pestle in such a manner so as to break up the aggregations without fracturing the individual grains. If the sample contains brittle particles, pulverize carefully and with just enough pressure to free the finer material that adheres to the coarser particles.

5.3 Place a portion of the soil in a 100 ml beaker and add distilled water at a ratio of 1 part soil to 2 parts water and let stand for 30 minutes.

5.4 After conditioning, pour the water from the beaker into the sample container of the conductivity meter and determine the conductivity to the nearest 0.01 m. mhos.

6. Determination of Sulfate Content:

6.1 Place 3 grams of the remaining soil from the watch glass into a 500 ml Erlenmeyer flask.

6. Determination of Sulfate Content: (continued)

6.2 Add 150 ml of distilled water, stopper the flask and shake to mix.

6.3 Centrifuge the sample for 30 minutes.

6.4 Decant the liquid into a 250 ml beaker and add 2 ml of dilute Hydrochloric acid (50% strength), to flocculate the suspended particles, cover with a watch glass and place onto a hot plate until the sample boils.

6.5 Remove the beaker from the hot plate and immediately filter through a fast filter paper (Whatman #41)

6.6 Add 10 ml of a 10% Barium Chloride ($BaCl_2 \cdot 2H_2O$) solution to this sample to determine the presence of sulfate. *(The liquid will become milky in the presence of sulfate).*

6.7 Cover the beaker with a watch glass and return to the hot plate to boil.

6.8 Immediately filter through a slow filter paper (Whatman #42) and wash with several hot water rinses.

6.9 Place the filter paper in a tared 30 ml platinum crucible, place the crucible into a muffle furnace and slowly raise the temperature to 1000°C to burn off filter paper.

6.10 Remove from the muffle furnace and desiccate until cool. Weigh to the nearest 0.0001 grams and record.

7. Sulfate Calculation:

[(W x 0.4115) / S] x 100 = _____ % Sulfate (SO_4)

where:

W = Sulfate wt.

S = Soil sample wt.

8. Report:

pH - _____
Marble pH - _____
Sulfate - _____ % SO_4
Conductivity - _____ m. mohs

METHODS OF SAMPLING AND TESTING
MT 233-07
METHOD OF TEST FOR RESISTANCE OF COARSE AGGREGATE TO DEGRADATION BY ABRASION IN THE MICRO-DEVAL APPARATUS
(Modified AASHTO T 327)

1 Scope:

1.1 This method covers a procedure for testing coarse aggregate for resistance to abrasion using the Micro-Dreval apparatus.

1.2 The text of this method references notes and footnotes which provide explanatory material. These notes and footnotes (excluding those in tables and figures) shall not be considered as requirements of the test method.

2 Referenced Documents:

2.1 ***AASHTO:***
T 327 Resistance of Coarse Aggregate to Degradation by Abrasion in the Micro-Deval Apparatus

MT Materials Manual:
MT 202 Sieve Analysis of Fine and Coarse Aggregates
MT 405 Wire-Cloth Sieves for Testing Purposes

3 Summary of Test Method:

3.1 The Mocro-Deval Test is a measure of abrasion resistance and durability of mineral aggregates resulting from a combination of actions including abrasion and grinding with steel balls in the presence of water. A sample with standard grading is initially soaked in water for a minimum of 15 hours. The sample is then placed in a jar mill with 2.0 L of water and an abrasive charge consisting of 5000 grams of 9.5 mm diameter steel balls. The jar, aggregate, water and charge are revolved at 100 rpm for two hours depending on the particle size. The sample is then washed and oven-dried. The loss is the amount of material passing the 1.18 mm sieve, expressed as a percent by mass of the original sample.

4 Significance and Use:

4.1 The Micro-Deval abrasion test is a test of coarse aggregates to determine abrasion loss in the presence of water and an abrasive charge. Many aggregates are more susceptible to abrasion when wet than dry, and the use of water in this test incorporates this reduction in resistance in degradation, in contrast to some other tests that are conducted on dry aggregate. The test results are helpful in evaluating the toughness/abrasion resistance of coarse aggregate subject to abrasion when adequate information is not available from service records.

4.2 The Micro-Deval abrasion test is a useful test for detecting changes in properties of aggregate produced from an aggregate source as part of a quality control or quality assurance program.

5 Terminology:

5.1 *Constant mass* – Test samples dried at a temperature of 230 ± 9ºF (110 ± 5ºC) to a condition such that it will not lose more than 0.1 percent moisture after 2 hours of drying. Such a condition of dryness can be verified by weighing the sample before and after successive two hour drying periods. In lieu of such a determination, samples may be considered to have reached constant mass when they have been dried at a temperature of 230 ± 9ºF (110 ± 5ºC) for an equal or longer period than that previously found adequate for producing the desired constant mass condition under equal or heaver loading condition of the oven.

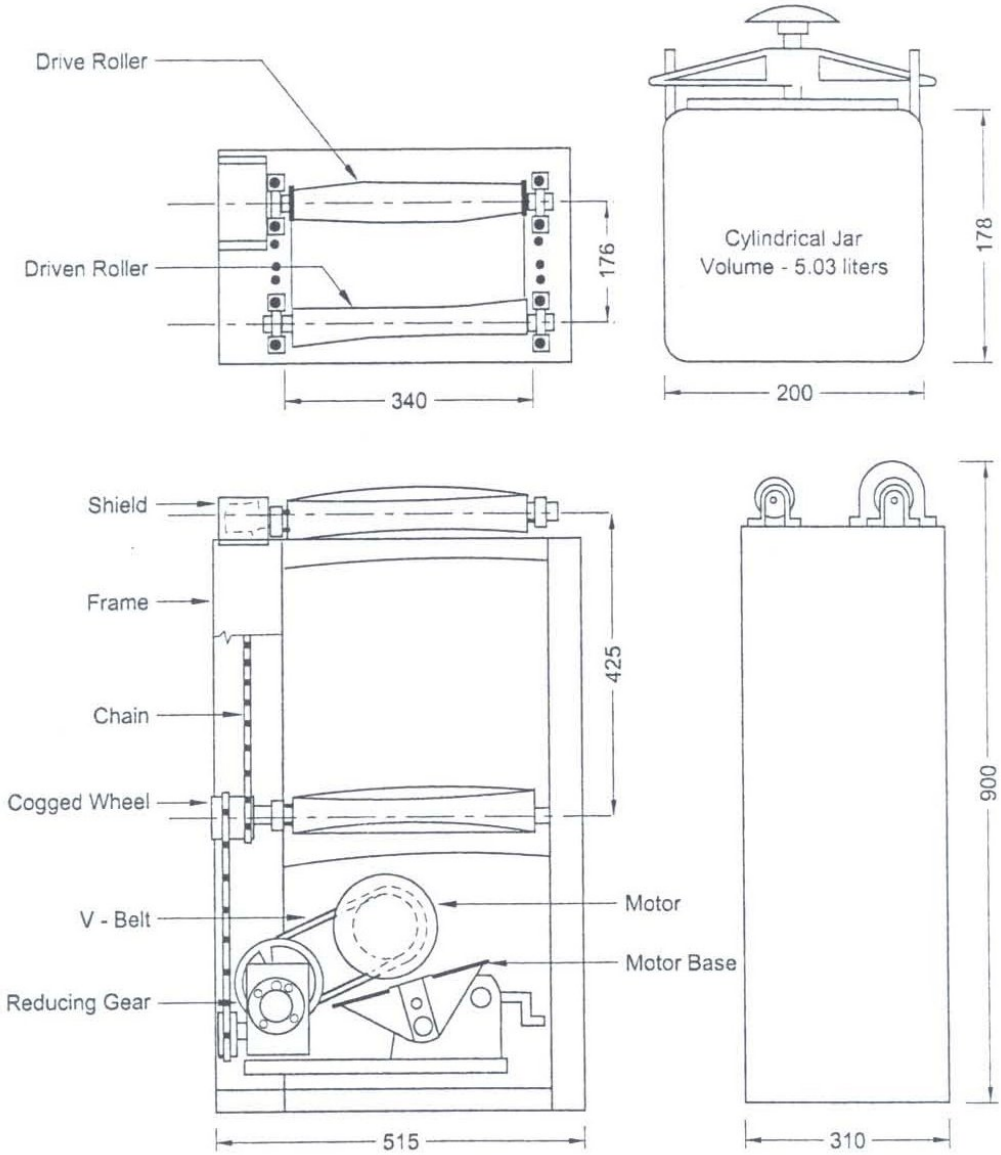

Note: All dimensions shown in millimeters unless otherwise noted.

Figure 1—Micro-Deval Abrasion Machine and Container

6 Apparatus:

6.1 *Micro-Deval Abrasion Machine* – A jar rolling mill capable of running at 100 ± 5 rpm.

Note 1 – Micro-Deval abrasion machine fitted with a counter may be used if the test is conducted on the basis of number of revolutions (Clause 9.4).

6.2 *Containers* – Stainless steel Micro-Deval abrasion jars having a 5-L capacity with a rubber ring in the rotary locking cover, an external diameter of 194 to 202 mm, and an internal height of 170 to 177 mm. The inside and outside surfaces of the jars shall be smooth and have no observable ridges or indentations. (Figure 1)

6 Apparatus: (continued)

6.3 *Abrasive Charge* – Magnetic steel balls are required. These shall have a diameter of 9.5 ± 0.5 mm. Each jar requires a charge of 5000 ± 5 g of balls.

6.4 *Sieves* –Sieves with square openings, and of the following sizes conforming to AASHTO M 92 specifications: 3/4 inch (19.0 mm), 5/8 inch (16.0m), 1/2 inch (12.5 mm), 3/8 inch (9.5 mm), 1/4 inch (6.3 mm), No. 4 (4.75 mm), No. 16 (1.18 mm).

6.5 *Oven* – The oven shall be capable of maintaining a temperature of 230 ± 9ºF (110 ± 5ºC).

6.6 *Balance* - A balance or scale accurate to 1.0 gram.

7 Reference Aggregate:

7.1 *Laboratory Reference Aggregate:* A supply of standard "Brechin Quarry No. 2" coarse aggregate available from the Soils and Aggregates Section, Materials Engineering and Research Office, Ministry of Transportation, 1201 Wilson Avenue, Downsview, Ontario, Canada M3m, 1J8.

7.2 *Calibration Aggregate* – An adequate supply of aggregate, established by the laboratory to use for calibration of the test method (see Section 11.1).

8 Test Sample:

8.1 The test sample shall be washed and oven dried at 230 ± 9ºF (110 ± 5ºC) to constant mass, separated into individual size fractions in accordance with MT-202, and recombined to meet the grading as shown in Section 8.2.

8.2 Aggregate for the test shall normally consist of material passing the 3/4 inch (19.0 mm) sieve, retained on the 3/8 inch (9.5 mm) sieve. An oven dried sample of 1500 ± 5 grams shall be prepared as in Table 1.

Table 1 – Preparation of an Oven-Dried Sample of 3/4" (19.0 mm)

Passing	Retained	Mass
3/4 " (19.0 mm)	5/8 " (16.0mm)	375 g
5/8" (16.0 mm)	1/2 " (12.5 mm)	375 g
1/2 " (12.5 mm)	3/8 " (9.5 mm)	750 g

8.3 In a case where the maximum nominal size of the coarse aggregate is 1/2 " (12.5 mm) or less, a sample of 1500 ± 5 g shall be prepared as in Table 2:

Table 2 – Preparation of an Oven-Dried Sample of Less Than 5/8" (16.0 mm)

Passing	Retained	Mass
1/2 " (12.5 mm)	3/8 " (9.5mm)	750 g
3/8 " (9.5mm)	1/4 " (6.3 mm)	375 g
1/4 " (6.3 mm)	No. 4 (4.75 mm)	375 g

8 Test Sample: (continued)

8.4 In a case where the maximum nominal size of the coarse aggregate is 3/8 " (9.5 mm) or less, a sample of 1500 ± 5 g shall be prepared as in Table 3:

Table 3 – Preparation of an Oven-Dried Sample of Less Than 1/2" (12.5 mm)

Passing	Retained	Mass
3/8 " (9.5mm)	1/4 " (6.3 mm)	750 g
1/4 " (6.3 mm)	No. 4 (4.75 mm)	750 g

9 Test Procedure:

9.1 Prepare a representative 1500 ± 5 g sample. Determine the mass "A" and record to the nearest 1.0 g.

9.2 Immerse the sample in 2.0 ± 0.05 liters of tap water at a temperature of 68 ± 9ºF (20 ± 5ºC) for a period of 15 to 19 hours either in the Micro-Deval container or some other suitable container.

9.3 Place the sample in the Micro-Deval abrasion container with 5000 ± 5 g of steel balls and the water used in section 9.2 to saturate the sample. Install the cover and place the container in the Micro-Deval machine.

9.4 Run the machine at 100 ± 5 rpm for 12,000 ± 100 revolutions for the grading shown in Section 8.2: for 10,500 ± 100 revolutions for the grading shown in Section 8.3: and for 9,000 ± 100 revolutions for the grading shown in Section 8.4.

Note 2 – Some equipment is not capable of measuring the total number of revolutions of the drum. If desired, instead of using revolutions, time can be used as follows:

Run the Micro-Deval machine at 100 ± 5 rpm for two hours ± 1 minute for the grading shown in Section 8.2. For the grading shown in Section 8.3, run the machine for 105 ± 1minutes. For the grading shown in Section 8.4, run the machine for 95 ± 1minutes.

9.5 Carefully pour the sample and steel balls over a No. 4 (4.75 mm) sieve superimposed on a No. 16 (1.18 mm) sieve. Take care to remove the entire sample from the stainless steel jar. Wash and manipulate the retained material on the sieves with water using a hand held water hose and the hand until the washings are clear and all the material smaller than No. 16 (1.18 mm) passes that sieve. Remove the stainless steel balls using a magnet or other suitable means.

9.6 Combine the material retained on the No.4 (4.75 mm) and No. 16 (1.18 mm) sieves, being careful not to lose any material.

9.7 Oven dry the sample to a constant mass at 230 ± 9ºF (110 ± 5ºC).

9.8 Weigh the sample to the nearest 1.0 g and record as mass "B".

10 Calculations:

10.1 Calculate the Micro-Deval abrasion loss, as follows, to the nearest 0.1 percent.

Percent Loss = (A – B) / A X 100

11 Use of the Calibration Aggregate:

11.1 *Calibration Aggregate* – The laboratory will establish an adequate supply of material to use for calibration of the test method. A suitable material with a loss of between 5 and 15 percent shall be established. From this material 10 sample will be taken randomly and tested. At the same time 10 samples of the reference aggregate from Brechin Quarry No.2 (see Section 7.1) shall also be tested. Provided the mean loss and variation of the Brechin Quarry No. 2 aggregate is within allowed tolerance of Section 11.1.1, the mean value obtained with the supply of in-house calibration aggregate shall be used thereafter. At any time a new supply is required, the calibration procedure shall be conducted.

11.1.1 The mean loss of the Brechin Quarry No. 2 reference aggregate (see Section 7.1) in multilaboratory study of the Micro-Deval Test is 19.1 percent. For continued acceptance of data, in-house calibration aggregate test data must fall within the range 5 to 15 percent loss for 95 percent of the time.

11.1.2 When test data of the calibration aggregate is outside the limits, an investigation as to the probable cause shall be conducted. The equipment shall be re-calibrated and the testing technique re-examined to detect non-conformance with the test procedure.

11.2 Every 10 samples, but at least every week in which a sample is tested, a sample of the calibration aggregate shall be tested. The material shall be taken from a stock supply and prepared according to section 8. When 20 samples of calibration aggregate have been tested, and the results show satisfactory variation, the frequency of testing may be changed to a minimum of one sample every month.

11.3 *Trend Chart Use* – The percent loss of the last 20 samples of calibration aggregate shall be plotted on a trend chart in order to monitor the variation in results (Figure 2).

Micro-Deval Abrasion: Trend Chart
Brechin Control Aggregate #2

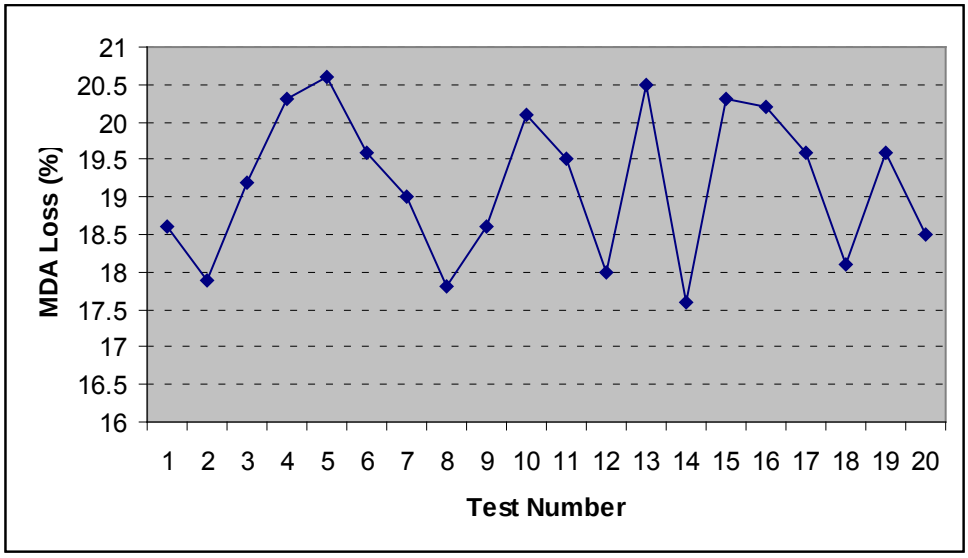

12 Report:

12.1 The report shall include the following:

12.1.1 The maximum size of the aggregate tested and the grading used;

12.1.2 The percent loss of the test sample to one decimal place;

12.1.3 The percent loss of the calibration aggregate, tested closest to the time at which the aggregate was tested, to the nearest 0.1 percent; and

12.1.4 The percent loss of the last twenty samples of calibration material on a trend chart.

CURRENT DATE OF REVISION
MT 300 SECTION
HOT MIX PAVEMENT

Test Method No.	Title	Pages	Date of Publication or Revision
MT 301	Vacant		
MT 302	Sampling and Testing Bituminous Materials	pp 1-2	Jul 2014
MT 303	Sampling Bituminous Paving Mixtures	pp 1-3	Jul 2014
MT 304	Moisture Test on Plant Mix Bituminous Surfacing Aggregates	pp 1-2	Jul 2014
MT 305	Volume Swell of Bituminous Mixtures	pp 1-6	May 2009
MT 306	Vacant		
MT 307	Vacant		
MT 308	Vacant		
MT 309	Splitting Samples of Plant Mix Surfacing to Testing Size	pp 1-2	Sep 2015
MT 310	Vacant		
MT 311	Vacant		
MT 312	Determining Moisture Content of Bituminous Mixtures	pp 1-2	Jul 2014
MT 313	Vacant		
MT 314	Bulk Specific Gravity of Compacted Bituminous Mixtures	pp 1-4	Jul 2014
MT 315	Vacant		
MT 316	Method of Sampling Recycled Pavement and Field Control of Recycle Paving	pp 1-5	Jun 2004
MT 317	Vacant		
MT 318	Vacant		
MT 319	Determining the Asphalt Binder Content of Plant Mix Surfacing (PMS) by the Ignition Method	pp 1-6	Jul 2014
MT 320	Mechanical Analysis of Aggregate Recovered from Ignition Oven Burn	pp 1-5	Jul 2014
MT 321	Determining Theoretical Maximum Specific Gravity of Bituminous Paving Mixtures - "Rice Gravity"	pp 1-4	Jul 2014
MT 322	Method of Determining the Percent of Adhesion of Bituminous Materials to Aggregate	pp 1-2	Oct 2004
MT 323	Vacant		
MT 324	Vacant		
MT 325	Determining Moisture Content of Bituminous Mixtures or Aggregate Using Microwave Ovens	pp 1-3	Jul 2014
MT 326	Vacant		
MT 327	Vacant		

CURRENT DATE OF REVISION
MT 300 SECTION
(HOT MIX PAVEMENT)

Test Method No.	Title	Pages	Date of Publication or Revision
MT 328	Establishing Field Target Density for Plant Mix Surfacing Density Control ...	pp 1	Jul 2014
MT 329	Procedure for Evaluating Plant Mix Surfacing Failures.....	pp 1-5	Jun 2004
MT 330	Vacant		
MT 331	Sampling and Evaluating Stripping Pavements	pp 1-7	Jul 2014
MT 332	Gyratory Compaction of Bituminous Mixtures.	pp 1-5	Jul 2014
MT 333	Method of Test for the Torsional Recovery of Latex Modified Asphalt Emulsion Residue	pp 1-3	Jun 2004
MT 334	Method of Test for Hamburg Wheel-Track Testing of Compacted Bituminous Mixtures	pp 1-3	Jul 2014
MT 335	Linear Kneading Compaction of Bituminous Mixtures	pp 1-2	Jul 2014
MT 336	Vacant		
MT 337	Method of Test for Soil Stiffness Gauge	pp 1-5	Jan 2010
MT 338	Draindown Characteristics of Uncompacted Asphalt Mixtures	pp 1-4	Feb 2010

METHODS OF SAMPLING AND TESTING
MT 302-14
SAMPLING AND TESTING BITUMINOUS MATERIAL
(*Montana Method*)

1 Scope

1.1 This method covers the procedure for sampling and testing bituminous materials, submitting samples, retaining samples, precautions to be used during sampling, designating who is to take the sample and the recording of information pertinent to the acceptance of bituminous materials.

2 Referenced Documents

AASHTO
R 66 Sampling Bituminous Materials

ASTM
D140 Standard Practice for Sampling Bituminous Materials

MT Materials Manual
MT 601 Material Sampling, Testing and Acceptance Guide
MT 610 Numbering Subgrade Material, Surfacing Material, Bituminous Treated Material, and Liquid Asphalt

3 Inspection

3.1 The Department will witness the taking of any or all acceptance samples by the Contractor or designated personnel.

4 Sampling Procedure

4.1 *Importance of proper sampling* - Sampling is equally as important as testing. Take every precaution to obtain samples that show the true nature and condition of the materials they represent. Test results are valuable only when the tests are performed on representative samples. Take samples in accordance with the following procedures, so there will be no question as to validity. This is very important in case of a test failure, which may be the basis for rejection of the material.

4.2 Refer to MT 601 for sample size and container type. Use containers furnished by the Department. Do not use second-hand containers, any containers washed or rinsed with solvents, or any containers provided by the contractor. (*Note 1*)

Note 1 – Use metal containers for cut-back asphalt and asphalt cement. Use plastic containers for asphalt emulsions only.

4.2.1 Per Specification, all truck tanks, trailer tanks, or other conveyances containing bituminous materials must be equipped with a sampling valve not less than ⅜-inch or more than ¾-inch in diameter. These valves may be installed either through the tank's bulkhead at centerline or on the discharge line between the truck unloading pipe and the hose. Sample the contents of railroad tank cars and truck transports, not equipped with a sampling valve, from the pressure side of the unloading pump.

4.2.2 <u>Discharge one gallon</u> or sufficient volume of material to clear the sampling device prior to taking the samples. This step is important to ensure a representative and uniform sample is taken.

4.2.3 Take the duplicate samples consecutively with a minimum lapse of time from the same tank or trailer.

Note 2 – Sample all emulsion shipments, regardless of the size of the shipment, within a reasonable time as to not compromise the sample. If emulsion sample has been diluted, note this on the sample record. Protect the emulsions samples from freezing. Re-sample when the material is stored without agitation for three or more days before use.

4.2.4 Leave the screw caps loose until the contents cool so the contraction of the asphalt will not collapse the containers. Remove any spillage on the outside of the container with a clean, dry cloth, cotton waste or paper towels. Do not use solvents (diesel fuel, gasoline, etc.) for this purpose.

Note 3 – For other sampling methods, refer to AASHTO R 66 and ASTM D140.

5 Submitting, Reporting and Testing of Samples

5.1 *Submitting*

5.1.1 After samples are taken, immediately forward to the Materials Bureau for testing.

5.2 *Reporting*

5.2.1 Create a SiteManager Sample Record to submit samples; for Performance Graded Asphalt Binder (PGAB) Sampling, use form MDT-MAT-057, PG Binder Samples; for Emulsion and Cutback Sampling, use form F101-C, Emulsion Samples.

5.2.2 Refer to MT 610 for numbering the bituminous material samples.

5.3 *Testing*

5.3.1 The Materials Bureau will perform tests for all specification requirements on samples selected at random for each project.

5.3.2 The Materials Bureau will immediately notify the Project Manager, who in turn will notify the Prime Contractor, when the result of a series of tests is not within the specification limits.

5.3.3 In the event of a failure, refer to applicable Specification.

6 Certification of Shipments

6.1 Ensure suppliers of bituminous materials furnish the Project Manager or their representative, one copy of the original bill of lading or invoice and a Certificate of Compliance. Ensure this documentation accompanies each tank car, truck-trailer tank, or other individual conveyance of bituminous materials shipped, or hauled to the project. This certificate, signed by a supplier's responsible representative, attests to the fact that the bituminous material complies with Department specifications for the type and grade of material represented and the conveyance was inspected and found to be free of contaminating material.

6.2 The Certificate of Compliance is the basis for tentative acceptance and use of the material. Do not allow the shipment to be tentatively accepted or incorporated in the work without the receipt of the certification. It may be included on the bill of lading or invoice or it may be a separate document attached to the bill of lading. The Project Manager will retain the certificate and bill of lading in the project files and digital files for record purposes.

MT 303-14
SAMPLING BITUMINOUS PAVING MIXTURES
(*Modified* AASHTO T 168)

1 Scope

1.1 These methods cover sampling of bituminous paving mixtures at points of manufacturer, storage, delivery, or in place.

2 Referenced Documents

AASHTO Standards
T 168 Sampling Bituminous Paving Mixtures

ASTM Standards
D979 Sampling Bituminous Paving Mixtures

MT Materials Manual
MT 309 Splitting Samples of Plant Mix Surfacing to Testing Size
MT 601 Materials Sampling, Testing and Acceptance Guide Index

Alberta Transportation ATT Test Procedures
ATT 37 Sampling, Mixes

3 Inspection

3.1 Inspect the material to determine discernible variations. Ensure the contractor provides equipment needed for safe and appropriate inspection and sampling.

4 Sampling Procedure

4.1 *Importance of proper sampling* - Sampling is equally as important as testing. Take every precaution to obtain samples that show the true nature and condition of the materials they represent. Test results are valuable only when the tests are performed on representative samples. Take samples in accordance with the following procedures, so there will be no question as to validity. This is very important in case of a test failure, which may be the basis for rejection of the material.

4.2 *Sampling from Truck Transports* - Select the units to be sampled from the production of materials delivered. Obtain a minimum of three approximately equal increments as shown in Figure 1 and combine to form a field sample. Obtain the sample by collecting the increments with a scoop or shovel. Avoid sampling the extreme top surface.

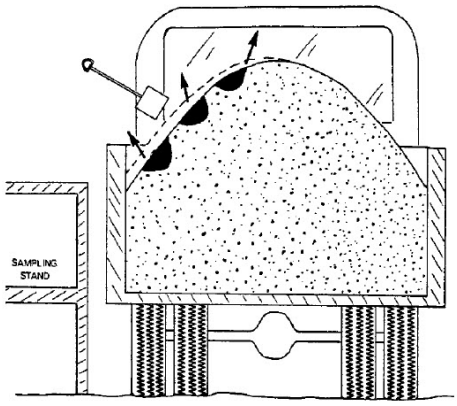

Figure 1. Sampling from Truck Transports

4.3 *Sampling from a Paver Auger* – Obtain samples from the end of the auger using a square head shovel. Place the shovel in front of the auger extension, with the blade flat upon the surface to be paved over. Allow the front face of the auger stream to cover the shovel, and remove the shovel before the auger reaches the shovel by lifting it upward as vertically as possible. Obtain sample from a minimum of three equal increments of material.

4.4 *Sampling from a Windrow* - Obtain a representative sample from the windrow of one transport unit. Combine a minimum of three approximately equal increments as shown in Figure 2.

1. Use the shovel to flatten a sufficient length of the windrow, discarding the material to either side.

2. Dig into the windrow's top at three or more equally distributed points along its flattened portion. Do not include material from the subgrade or base. The sample is the total mix from three or more holes.

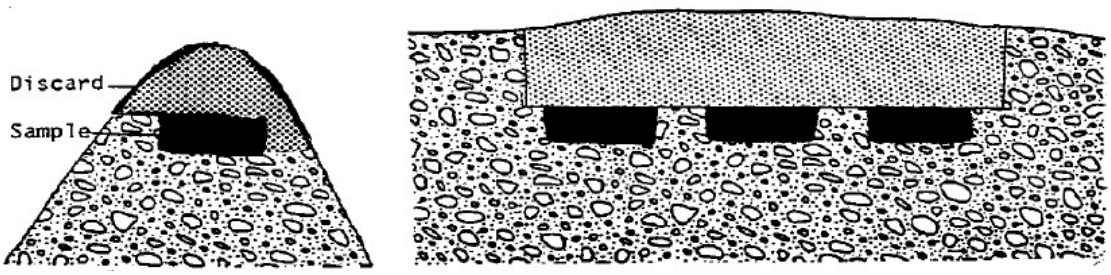

Figure 2. Sampling from a Windrow

4.5 *Sampling from Bituminous Cold Mix or Recycled Asphalt Pavement (RAP) Stockpiles* – Cold mixes that are in a stockpile for some time may develop a crust on the surface of the pile. Remove this crust to a depth of 4 inches, over an area of one square yard, to expose the un-weathered mix as shown in Figure 3. Stir the exposed stockpile and obtain three approximately equal samples selected at random, and combine to form a field sample.

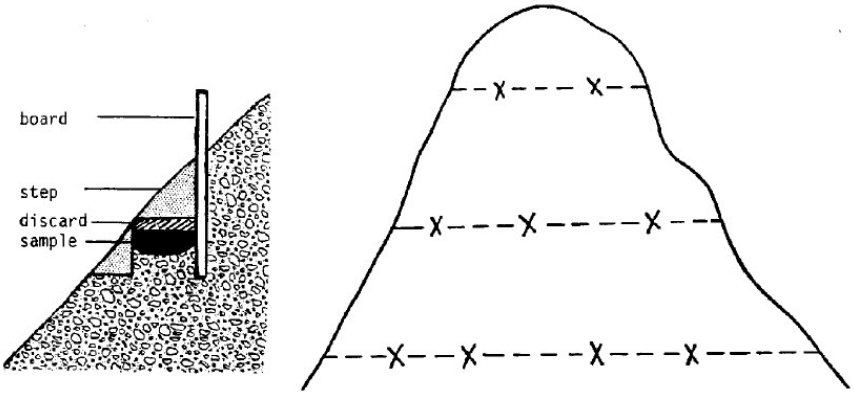

Figure 3. Sampling from a Stockpile

5 Number and Quantities of Field Samples

5.1 Designate each unit from which a field sample is to be obtained prior to sampling.

5.2 Refer to MT 601 for sample size. The quantities depend on the type and number of tests to which the material is to be subjected. Obtain sufficient material to provide for the proper execution of standard control and acceptance tests.

6 Securing or Submitting Samples

6.1 Transport samples in containers constructed to minimize heat loss, contamination, or damage to the sample from mishandling during shipment.

6.2 Record pertinent information in the Quality Assurance Suite (QA Suite) Plant Mix section.

6.3 Using the Hamburg Sampling Guideline, attach identification to each Hamburg sample sent to a district or headquarter lab.

6.4 Create a SiteManager Sample Record and attach to any plant mix sample sent to a district or headquarter lab.

6.5 Use tamper resistant container(s) when sample(s) leave Department custody.

MT 304-14
MOISTURE TEST ON PLANT MIX BITUMINOUS SURFACING AGGREGATES (*Montana Method*)

1 Scope

1.1 This test method covers the determination of the moisture content of bituminous surfacing aggregates by various drying methods.

2 Referenced Documents

AASHTO Standards
M 231 Weighing Devices Used in the Testing of Materials

MT Materials Manual
MT 201 Sampling Roadway Materials

3 Terminology

3.1 *Constant mass* – the state at which a mass does not change more than 0.10 percent, after additional drying for the defined time interval in Table 3.1.

Table 3.1
Methods of Drying

Heat Source	Specific Instructions	Drying increments (minutes)
Controlled: Forced draft (preferred), ventilated, or convection oven	110 ±5°C (230 ±9°F)	30
Uncontrolled: Hot plate, Heat Lamp, etc.	Stir frequently	20
Microwave	Heap sample and cover with ventilated lid	10

4 Apparatus

Ensure equipment used meets the following requirements;

4.1 *Drying Apparatus* - any suitable device capable of drying samples.

4.2 *Balance* – balance or scale with a capacity larger than the size of the sample being tested. The balance or scale must have a sensitivity of 0.1 gram and conform to the requirements of AASHTO M 231.

4.3 *Sample container* – not affected by heat and of sufficient size to contain a test sample of at least 4,000 g without danger of spilling.

5 Sampling

5.1 Obtain a representative sample of at least 3 pounds from each bin, stockpile, or cold feed belt per MT 201. Immediately place the material, from each separate bin, stockpile, or cold feed belt, into a weighed container and seal.

6 Procedure

6.1 After weighing the container with aggregate, transfer the material to drying pans and dry to constant mass in an approved manner. Stir the sample occasionally to facilitate drying.

6.2 Reweigh sample and container when the sample has been dried to constant mass.

Note 1 – Perform moisture testing on mixes showing the following properties:

- *Foaming on the surface of the coarse aggregate particles*
- *Excessive slumping of the mix in the truck*
- *Condensed water dripping from the truck box*
- *Bubbles or blisters forming on the surface immediately behind the paver*

Ordinarily these conditions will not develop if the moisture content is below approximately 2 percent.

7 Calculations

7.1 Compute the **moisture content** of each sample of the aggregate using the following formula:

$$M = \left(\frac{W-D}{D-C}\right) \times 100$$

where:

$M =$ percent of moisture

$W =$ wt. of wet sample and container

$D =$ wt. of dry sample and container

$C =$ wt. of container

7.2 Compute the **composite moisture content** of the total aggregate according to the following example:

Aggregate Size	Fraction of Job Mix		Moisture Content, Percent
3/4" to 3/8"	0.20	x	2.00 = 0.40
3/8" to No. 10	0.40	x	1.00 = 0.40
Passing No. 10	0.40	x	0.50 = 0.20
	Composite Moisture Content		= 1.00

8 Reporting

8.1 Report the moisture content to the nearest 0.10 percent.

METHODS OF SAMPLING AND TESTING
MT 305-09
METHOD OF TEST FOR VOLUME SWELL OF BITUMINOUS MIXTURES
(Montana Test Method)

1 Scope:

1.1 This test method provides for the determination of the maximum volume swell of compacted aggregates, soil, sand, or combination of mixtures passing the 10 Mesh (2.0 mm) sieve and stabilized with bituminous material.

2 Apparatus:

2.1 *Compaction Apparatus:*

2.1.1 *Forming mold* - This forming mold shall be a steel cylinder 2.50 inches (63.5 mm) or greater in outside diameter, 2.000 - 2.001 inches (50.80 - 50.8254 mm) inside diameter, and approximately 2.75 inches (69.85 mm) high. One end shall be recessed 0.245 - 0.250 inches (6.223 - 6.350 mm) with an inside diameter of 2.250 - 2.252 inches (57.1500 - 57.2008 mm) to fit the 2.247 - 2.249 inch (57.0738 - 57.1246 mm) base if the base plate method is used.

2.1.2 *Plungers* - Cylindrical steel plungers, fitted to the molding cylinders, 1.997 ± 0.001 inch (50.7238 ± 0.0254 mm) in diameter and 3 inches (76.2 mm) high.

2.1.3 *Base* - Solid steel, circular plate 1 inch (25.4 mm) thick and 3 inches (76.2 mm) in diameter, beveled and machined to a 2.247 - 2.249 inch (57.0738 - 57.1246 mm) top diameter above the mold seat.

2.2 *Compression Testing Machine or Press* - A compression machine or press capable of applying loads of 10,000 pounds (4535.9 kg.) or greater and indicating the applied load with a sensitivity of 50 pounds (22.7 kg.) or less.

2.3 *Mixing Apparatus:*

2.3.1 *Mixing pans* - shall be smooth and conform to the following dimensions:
Bottom inside diameter = approximately 4-3/4" (120.65 mm)
Top inside diameter = approximately 6-1/4 in. (158.75 mm)
Height = approximately 3 in. (76.2 mm)

2.3.2 *Spatula* - approximately 7 in. (177.8 mm) long and 1/2 in. (12.7 mm) wide.

2.3.3 *Putty knife* - approximately 1-1/2 in. (38.1 mm) wide with a rounded tip.

2.3.4 Large metal scoop with handle (24 to 48 oz.).

2.3.5 Anti-slip, flexible rubber gloves (nitrile or vinyl).

2.4 *Heater* - An electric thermostatically controlled hot plate for warming pans of bituminous mix.

2.5 *Vacuum Desiccator* - of convenient size with a vacuum gauge incorporated on the lid. The gauge shall be calibrated in inches or centimeters of Hg (mercury) vacuum.

2.6 Hand or motor driven vacuum pump with approximately two feet of plastic vacuum hose.

2.7 Stop-cock grease for desiccator seal.

2 Apparatus: (continued)

2.8 Screw clamp.

2.9 Measuring and weighing apparatus.

2.9.1 A balance with a capacity of 500 grams and sensitive to 0.1g..

2.9.2 A measuring device that is accurately calibrated and equipped to determine heights and diameters of test specimens to the nearest 0.01 cm.

2.9.3 *Mercury Displacement Cup* - A glass or plastic cup with flat ground edge of convenient size to contain test specimens for mercury displacement measurement.

2.9.4 Glass dish approximately 10 x 6 x 2 in. (254 x 152.4 x 50.8 mm)

2.9.5 Porcelain pan approximately 15 x 10 x 2-1/2 in. (381 x 254 x 63.5 mm)

2.10 Drying Oven - A thermostatically controlled drying oven capable of maintaining a temperature of 140± 5°F (60 ± 3°C)

2.11 A 4 mesh (4.75 mm) and a 10 mesh (2.0 mm) sieve.

2.12 Thermometers, beakers, and a 100 ml, glass, graduated cylinder with intervals of 1.0 mm.

2.13 Pulverizing Apparatus - Either a mortar and rubber covered pestle or a mechanical device consisting of a power-driven rubber covered mallet suitable for breaking up the aggregations of soil particles without reducing the size of the individual grains.

3 Materials:

3.1 Distilled water with a pH of approximately 7. (Tap water is satisfactory if it does not interfere chemically with the test.)

3.2 Bituminous material - 200/300 Pen A.C.

3.2.1 200/300 Pen A.C. should be replaced with new asphalt at the beginning of each construction season.

3.3 Mercury.

3.3.1 Mercury (Hg) is a poison and can be absorbed through the respiratory tract, the intestinal tract or through unbroken skin. Mercury is a cumulative poison and is a very volatile element. Dangerous levels are readily attained in the air at 77ºF (25ºC). Tests involving the use of Mercury should be performed under conditions of adequate ventilation. A fume hood is recommended for large numbers of samples or where the test is to be carried out frequently over extended periods of time. Protective gloves should be worn under conditions here skin contact with mercury may occur.

3.3.2 This test procedure does not purport to address all of the safety concerns, if any, associated with its use. It is the responsibility of the user of this test procedure to establish appropriate safety and health practices and determine the applicability of regulatory limitation prior to use.

4 Preparation of Aggregate:

4.1 A representative sample of the 10 mesh (2.00 mm) material as described in MT-200 (Dry Preparation of Aggregate) shall be prepared. The sample shall be large enough to produce

4 Preparation of Aggregate: (continued)

approximately 400 grams of minus 10 mesh (2.00 mm) material at the conclusion of the pulverizing procedure.

5 Volume Swell Procedure: The caliper method will be used to test all volume swell samples. If the caliper method yields a volume swell of 8.0 or greater then a sample will be submitted to either the Helena Materials Lab or the Billings District Lab for testing using the mercury method. The mercury method will only be performed in the Helena Materials Lab or the Billings District Lab Porous briquettes that may entrap mercury shall be measured with calipers only.

5.1 Volume Swell Procedure – Caliper Method:

5.1.1 Warm the 200/300 pen asphalt cement for mixing to approximately 250 ± 15ºF (121 ± 8ºC).

5.1.2 Stabilize the hot plate at 425ºF to 475 ºF (218ºC to 246ºC).

5.1.3 Stir the sample prepared in paragraph 4 with a spatula and transfer a 100 gram sample to the weighing scoop. Use the spatula to obtain a uniform discharge and to pull material from the bottom of the sample container when transferring the material. If desired, the material may be preheated in an oven 230 ± 9ºF (110 ± 5ºC).

5.1.4 Transfer the 100 gram sample from the weighing scoop to the mixing pan, stir with a putty knife and shake the material to one side of the mixing pan.

5.1.5 Place the mixing pan and sample on the balance and add 6.5 grams of 200/300 Pen A.C., do not pour asphalt on material; place the pan back on the hot plate.

5.1.6 When asphalt starts to flow into the sample, start mixing rapidly with a putty knife while shaking the mixing pan close to the hot plate. Avoid overheating the mix, as evidenced by smoking asphalt. Mix and shake until a thorough mixture is obtained. See Note 1.

Note 1 - In the case of material having poor adhesion, the larger particles will only be slightly coated. Do not add more asphalt. Mix and shake until maximum coverage is obtained.

5.1.7 Pour the mixture from the mixing pan into a small scoop. Pour the mixture from the scoop into the assembled mold using the spatula to assist in obtaining a uniform discharge from the scoop. Insert the top plunger with a twist and a light tamp to seat firmly. Place the mold in the compression machine and at a uniform rate increase the load to a total of 6280 pounds in no less than 15 seconds. Maintain the maximum load for one minute and release. Remove the base plate with a twisting motion and mark the briquette in the mold with a wax crayon, applying light pressure.

5.1.8 After removing the base plate with a twisting motion and marking the briquette, turn the assembly upside down. Place the sleeve on top of the forming mold and using the jack apply, pressure to the sleeve and top plunger. This will push the briquette and top plunger up into the sleeve. See Note 2. Cool and cure the briquette for three hours at room temperature.

Note 2 -If the briquettes tend to stick to the mold or plungers, preheat mold to 140ºF (60ºC).

5.1.9 Wipe the forming mold, base plate and plungers clean with a suitable solvent and dry with a cloth before forming each briquette.

5.1.10 Measure and record the height and radius of the cured briquette. To obtain the height of the specimen, measure and record the height (flats of the specimen) in four locations. Measurements should be taken at 90 degree intervals. Average the four measurements and use the average height for the calculations. To obtain the radius of the specimen, measure and record the

5.1 Volume Swell Procedure – Caliper Method: (continued)

diameter of the specimen (sides) in four locations. Measurements should be taken at 45 degree intervals. Average the four measurements and divide by 2 to obtain the average radius. Use the average radius for the calculations. Refer to Paragraph 6.1.2 (calculations) to determine the volume of the cured briquette.

5.1.11 Check the vacuum equipment for leaks before any briquettes are put into the desiccator.

5.1.12 Fill the vacuum desiccator with distilled water and allow to stabilize at room temperature. Completely submerge the briquette in the distilled water and seal the top. See Note 3.

Note 3 -A perforated tray is supplied for a second layer of briquettes.

5.1.13 Subject the briquette to 8 inches (20.3 cm) of mercury vacuum for one hour. The 8 inches of vacuum will be applied within the desiccator in not less than one minute. The vacuum is maintained for one hour and released gradually to avoid pressure shock to the briquettes.

5.1.14 Keep the briquette completely submerged in the distilled water at room temperature for an additional 23 hours. If necessary to transfer to another container of distilled water, wait 15 minutes after releasing pressure before effecting transfer.

5.1.15 Remove the briquette, blot the excess water and weigh. Measure and record the height and radius of the swollen briquette. To obtain the height of the specimen, measure and record the height (flats of the specimen) in four locations. Measurements should be taken at 90 degree intervals. Average the four measurements and use the average height for the calculations. To obtain the radius of the specimen, measure and record the diameter of the specimen (sides) in four locations. Measurements should be taken at 45 degree intervals. Average the four measurements and divide by 2 to obtain the average radius. Use the average radius for the calculations. Refer to Paragraph 6.1.2 (calculations) to determine the volume of the cured briquette and the percent of volume swell. In no event will the briquette be allowed to set for more than ten minutes before measuring is completed. The sides of the briquette will be squeezed for recording condition of the briquette such as hard, firm, soft, soft and cracked, or disintegrated. Refer to paragraph 6.1.1 (calculations) to determine the percent of volume swell. (See Note 4)

NOTE 4 - The test specimen shall be measured immediately after excess water is blotted off the specimen. When measuring with calipers, take four measurements on the sides of the specimen and four measurements on the flats of the specimen at 90 degree intervals and record. The average of the recordings will be used for the calculation.

5.2 Volume Swell Procedure – Mercury Method: The Helena Materials Lab and the Billings District Lab are the only labs that will be performing volume swell testing using Mercury. A designated set of testing apparatus will be used to test using mercury (such as a Vacuum Desiccator designated for mercury method samples). The mercury method briquettes will be stored in a labeled container with a lid. The desiccator disposal water will also be stored in a labeled container with a lid. The waste products will be stored near the mercury method equipment and when a container of approximately five gallons is collected, Environmental Services will be contacted for disposal.

5.2.1 Warm the 200/300 Pen Asphalt Cement for mixing to approximately 250□ 15ºF (121± 8ºC).

5.2.2 Stabilize the hot plate at 425 to 475ºF (218 to 246ºC).

5.2.3 Stir the sample prepared in paragraph 4 with a spatula and transfer a 100 gram sample to the weighing scoop. Use the spatula to obtain a uniform discharge and to pull material from the bottom of the sample container when transferring the material. If desired, the material may be preheated in an oven 230± 9ºF (110± 5ºC).

5.2 Volume Swell Procedure – Mercury Method: (continued)

5.2.4 Transfer the 100 gram sample from the weighing scoop to the mixing pan, stir with a putty knife and shake the material to one side of the mixing pan.

5.2.5 Place the mixing pan and sample on the balance and add 6.5 grams of 200/300 Pen A.C., do not pour asphalt on material; place the pan back on the hot plate.

5.2.6 When asphalt starts to flow into the sample, start mixing rapidly with a putty knife while shaking the mixing pan close to the hot plate. Avoid overheating the mix, as evidenced by smoking asphalt. Mix and shake until a thorough mixture is obtained. See Note 1.

5.2.7 Pour the mixture from the mixing pan into a small scoop. Pour the mixture from the scoop into the assembled mold using the spatula to assist in obtaining a uniform discharge from the scoop. Insert the top plunger with a twist and a light tamp to seat firmly. Place the mold in the compression machine and at a uniform rate increase the load to a total of 6280 pounds in no less than 15 seconds. Maintain the maximum load for one minute and release. Remove the base plate with a twisting motion and mark the briquette in the mold with a wax crayon, applying light pressure.

5.2.8 After removing the base plate with a twisting motion and marking the briquette, turn the assembly upside down. Place the sleeve on top of the forming mold and using the jack apply, pressure to the sleeve and top plunger. This will push the briquette and top plunger up into the sleeve. See Note 2. Cool and cure the briquette for three hours at room temperature.

5.2.9 Wipe the forming mold, base plate and plungers clean with a suitable solvent and dry with a cloth before forming each briquette.

5.2.10 Weigh the cup filled with mercury and record the weight (W_1). Place the cured briquette in the cup and allow the mercury to displace by pressing the plastic plate flatly, squarely and firmly down on the specimens top surface until the plate is seated on the top rim on the cup and the excess mercury is fully displaced. Remove the cured briquette. Weigh and record the weight of the mercury and the cup minus the weight of the mercury lost due to immersion of the cured briquette (W_2). Wear Rubber exam gloves at all times when while testing with mercury.

5.2.11 Check the vacuum equipment for leaks before any briquettes are put into the desiccator.

5.2.12 Fill the vacuum desiccator with distilled water and allow to stabilize at room temperature. Completely submerge the briquette in the distilled water and seal the top. See Note 3.

.**5.2.13** Subject the briquette to 8 inches (20.3 cm) of mercury vacuum for one hour. The 8 inches of vacuum will be applied within the desiccator in not less than 1 minute. The vacuum is maintained for one hour and released gradually to avoid pressure shock to the briquettes.

5.2.14 Keep the briquette completely submerged in the distilled water at room temperature for an additional 23 hours. If necessary to transfer to another container of distilled water, wait 15 minutes after releasing pressure before transfer.

5.2.15 Remove the briquette and blot the excess water. Place the swollen briquette in the mercury cup and allow the briquette to displace the mercury by pressing the plastic plate flatly, squarely and firmly down on the specimen's top surface until the plate is seated on the top rim on the cup and the excess mercury is fully displaced. Weigh and record the weight of the mercury and the cup minus the weight of the mercury lost due to immersion of the swollen briquette (W_3). In no event will the briquette be allowed to set for more than ten minutes before weighing is completed. The sides of the briquette will be squeezed for recording condition of the briquette such as hard, firm, soft, soft and cracked, or disintegrated. Refer to paragraph 6.1.2 (calculations) to determine the percent of volume swell. See Note 5.

5.2 Volume Swell Procedure – Mercury Method: (continued)

Note 5 – The test specimen shall be weighed immediately after excess water is blotted off the specimen. If the specimen is allowed to set for any amount of time, the specimen will dry out and shrink giving erroneous swell results.

6 Calculation:

6.1 The volume swell, expressed as a percentage can be calculated by either of the two following methods.

6.1.1 Percent Volume Swell by Caliper Method

$V = \pi r^2 h$

where:

V = volume of specimen
π = 3.1416
r = radius of specimen
h = height of specimen

and

$$S = \frac{V_2 - V_1}{V_1} x100$$

where:

S = volume swell, percent,
V_1 = volume of specimen before immersion, by caliper
V_2 = volume of specimen after immersion.

6.1.2 Percent Volume Swell by Mercury Method

$$S = \frac{W_2 - W_3}{W_1 - W_2} x100$$

where:

S = volume swell, percent,
W_1= weight of cup filled with mercury,
W_2= weight of mercury and cup minus mercury lost because of immersion of cured briquette,
W_3= weight of mercury and cup minus mercury lost because of immersion of swollen briquette.

7 Report:

7.1 The report shall consist of the following:

7.1.1 Percent of Volume Swell,

7.1.2 Condition of specimen.

METHODS OF SAMPLING AND TESTING
MT 309-15
SPLITTING SAMPLES OF PLANT MIX SURFACING TO TESTING SIZE (MONTANA METHOD)

1 Scope

1.1 This test method covers the procedure for splitting samples of Plant Mix Surfacing (PMS). Take samples in accordance with MT 303. Place sampled materials in Department provided containers. The sample is to be representative of the PMS being produced. Take a field sample of sufficient mass, such that after splitting, each quarter of the field sample meets the testing requirements. Split the field sample as close as possible to the point of testing, to avoid excessive cooling of the sample.

2 Referenced Documents

MT Materials Manual
MT 303 Sampling Bituminous Paving Mixtures

3 Apparatus

3.1 *Oven* – oven capable of maintaining compaction temperature range according to mix design.

3.2 *Splitting Surface* – a non-stick surface such as metal, paper, canvas blanket or heat-resistant plastic.

3.3 *Miscellaneous Equipment* – flat-bottomed scoop, broom or brush, large spatulas, trowels, metal straight edge or 12 inch dry wall taping knife, sheet metal quartering splitter, hot plate, heat resistant gloves or mittens, pans, buckets and cans.

4 Sample Preparation

4.1 Ensure the sample is warm enough to separate. If not, warm in an oven until it is sufficiently soft to mix and separate easily.

5 Procedure for Splitting Samples to Test Size

5.1 Heat the trowel(s), spatula(s), and splitting apparatus to 110ºC (230ºF) minimum.

5.2 Remove the sample from the container(s) by dumping into a conical pile. Place the sample on a hard, clean, non-stick, level surface where there will be neither loss of material nor the accidental addition of foreign material.

5.3 Mix the material thoroughly by turning the entire sample over four times. With the last turning, form the entire sample into a conical pile.

Note 1 – Accomplish mixing by turning the pile with a heated spatula or by rolling the material over with paper or other material used for the rolling surface. Do not re-mix samples of lean mixes or mixes with aggregate larger than ¾" (19mm).

5.4 Flatten the conical pile to a uniform thickness and diameter by pressing down with a hot spatula or trowel. The diameter should be four to eight times the thickness.

5.5 Divide the flattened pile into four approximately equal quarters with a heated spatula, trowel, flat metal plate, or sheet metal quartering splitter.

5.6 With the quartering apparatus in place, using a straightedge (taping knife), slice through the quarter of the PMS from the apex of the quarter to the outer edge. Pull or drag the material from the quarter holding one edge of the straightedge (taping knife) in contact with the quartering apparatus.

5.7 Slide or scoop the material into a sample pan. Repeat step 5.6 removing a similar amount of material from the opposite corner and repeat until all the samples for testing have been obtained.

Note 2 – When reducing the sample to test size it is advisable to take several small increments determining the mass each time until the proper minimum size is achieved. Unless the sample size is grossly in excess of the minimum or exceeds the maximum test size use the sample as reduced for the test.

MT 312-14
DETERMINING MOISTURE CONTENT OF BITUMINOUS MIXTURES
(*Modified AASHTO T 329*)

1 Scope

1.1 This test method covers the determination of the moisture content of bituminous mixtures by drying in an oven.

2 Referenced Documents

AASHTO
T 329 Moisture Content of Hot Mix Asphalt (HMA) by Oven Method

MT Materials Manual
MT 303 Sampling Bituminous Paving Mixtures
MT 309 Splitting Samples of Plant Mix Surfacing to Testing Size

3 Terminology

3.1 *Constant mass* – the state at which a mass does not change more than 0.05 percent.

3.1.2 Determine the mass after initially dried for 90 ± 5 minutes. Continue drying the sample at 30 ± 5 minute intervals, at a temperature not to exceed mix design compaction temperature range. After each interval, determine the mass and use the calculation in Section 7.2 until the sample has achieved constant mass.

4 Apparatus

Ensure equipment used meets the following requirements:

4.1 *Forced Air, Ventilated, or Convection Oven* – capable of maintaining mix design compaction temperature range.

4.2 *Thermometer* – with a temperature range from 50ºF to 400ºF (10ºC to 204.4ºC).

4.3 *Balance or scale* – with a capacity of at least 2 Kg., readable to 0.1 gram.

4.4 *Sample container* – not affected by heat and of sufficient size to contain a test sample of at least 1,000 g without danger of spilling.

5 Sample

5.1 Obtain the test sample in accordance with MT 303, and reduce in accordance with MT 309. Ensure the test sample is at least 1000 g.

6 Procedure

6.1 Determine and record the temperature and mass of the sample container to the nearest 0.1 g.

6.2 Place the test sample in the sample container and evenly distribute. Determine and record the total mass of the sample container and the test sample to the nearest 0.1 g.

6.3 Calculate the initial, moist mass of the test sample by subtracting the mass of the sample container determined in section 6.1 from the total mass of the sample container and the test sample determined in section 6.2.

6.4 Dry the test sample to a constant mass in the sample container.

6.5 After drying, determine and record the total mass of the sample container and test sample to the nearest 0.1 g.

Note 1 – Do not remove the test sample from the sample container for the purposes of determining mass.

6.6 Ensure the final sample temperature is within ±15°F of the temperature recorded in Section 6.1.

6.7 Calculate the final, dry mass of the test sample by subtracting the mass of the sample container determined in section 6.1 from the total mass of the sample container and the test sample determined in section 6.5.

Note 2 – Moisture content and the number of samples in the oven will affect the rate of drying. Placing wet samples in the oven with nearly dry samples will affect the drying process.

7 Calculations

7.1 Calculate the **moisture content**, as a percentage of the total mix, using the following formula:

$$Moisture\ Content, \% = \left(\frac{M_i - M_f}{M_i}\right) \times 100$$

where:

M_i = mass of the initial, moist test sample

M_f = mass of the final, dry test sample

Example: $M_i = 1001.3\text{g}$

$M_f = 991.7\text{g}$

$$Moisture\ Content, \% = \left(\frac{1001.3 - 991.7}{1001.3}\right) \times 100 = 0.9587, round\ to\ 0.96\%$$

7.2 Calculate the **change in mass**, as a percentage, using the following formula:

$$\%\ Change = \left(\frac{M_p - M_n}{M_n}\right) \times 100$$

Where:

M_p = previous mass measurement

M_n = new mass measurement

8 Reporting

8.1 Report the moisture content to the nearest 0.01 percent.

MT 314-14
BULK SPECIFIC GRAVITY OF COMPACTED BITUMINOUS MIXTURES
(MODIFIED AASHTO T 166)

1 Scope:

1.1 This test method covers the determination of bulk specific gravity (G_{mb}) of specimens of compacted plant mix surfacing (PMS).

1.2 Do not use this method with samples that contain open or interconnecting voids or absorb more than 2 percent of water by volume, as calculated in section 7.2. If sample absorbs more than 2 percent of water by volume, refer to AASHTO T 275.

1.3 The bulk specific gravity (G_{mb}) of the compacted bituminous mixtures may be used in calculating the unit mass of the mixture.

1.4 The values stated in SI units are to be regarded as the standard.

2 Referenced Documents:

AASHTO:
M 231 Weighing Devices Used in the Testing of Materials
T 166 Bulk Specific Gravity (G_{mb}) of Compacted Hot Mix Asphalt (HMA) Using Saturated Surface-Dry Specimens
T 275 Bulk Specific Gravity (G_{mb}) of Compacted Hot Mix Asphalt (HMA) Using Paraffin-Coated Specimens

ASTM:
D7227 Rapid Drying of Compacted Asphalt Specimens Using Vacuum Drying Apparatus

3 Terminology:

3.1 *Bulk Specific Gravity (of Solids) (G_{mb})* – The ratio of the mass in air of a unit volume of a permeable material (including both permeable and impermeable voids normal to the material) at a stated temperature to the mass in air of equal density of an equal volume of water at a stated temperature. Express G_{mb} as follows:

$$Bulk\ specific\ gravity\ (Gmb)\ at\ \frac{x}{y}\,°C$$

where:

x = temperature of the material; and

y = temperature of the water.

3.2 *Constant mass* – the state at which a mass does not change more than 0.05 percent.

3.2.1 Determine the mass after each cycle (Core Dry Method) or after an initial dry time of 90 ± 5 minutes (Suspension Method). Continue drying the sample at 30 ± 5 minute intervals, at a temperature not to exceed mix design compaction temperature range. Determine the mass at each cycle or interval until the sample has achieved constant mass.

Note 1 - Recently molded laboratory samples, which have not been exposed to moisture, do not require drying. Core samples may be air dried in lieu of oven drying if results are proven not to differ from the oven drying method. The oven drying method is the standard and shall be used in case of dispute.

4 Test Specimens:

4.1 Test specimens may be either laboratory-compacted Plant Mix Surfacing (PMS) or sampled from PMS pavements.

4.2 *Size of Specimens* **–** It is recommended that: (1) the diameter of cylindrically molded or cored specimens, or the length of the sides of sawed specimens, be at least equal to four times the maximum size of the aggregate; and (2) the thickness of specimens be at least 1.5 times the maximum size of the aggregate.

4.3 Take specimens from pavements with a core drill, diamond or carborundum saw, or by other suitable means.

4.4 Avoid distortion, bending, or cracking of specimens during and after the removal from the pavement or mold. Store specimens in a safe, cool place.

4.5 Ensure specimens are free from foreign materials such as seal coat, tack coat, foundation material, soil, paper, or foil.

4.6 Separate specimens from other pavement layers, if necessary, by sawing or other suitable means. Ensure sawing does not damage the specimens.

4.7 Once a testing method has been selected, all core samples for the project must be evaluated using the selected method.

5 CoreDry (InstroTek® Inc.) Drying Method:

5.1 Follow the manufacturer's recommendations for warm up and self-test procedures.

5.2 *Daily Test:* Every day before starting the testing operation, dry the cold trap and the specimen chamber. Run the unit without any specimens. Ensure the pressure reading on the display is 6 mm Hg or less. If the indicated pressure is higher than 6 mm Hg, refer to the manufacturer's trouble shooting instructions for obtaining a proper pressure reading in the chamber.

5.3 *Drying Specimens:* Use a handheld infrared thermometer to ensure that the surface temperature of the specimen is between 15°C and 30°C (59 ºF and 86 ºF). If the specimen is below 15°C or above 30°C (59 ºF and 86 ºF), place the specimen in a room temperature environment until the surface temperature approaches the required testing temperature of 15°C to 30°C (59 ºF and 86 ºF).

5.4 Place a specimen (on its side) on top of the specimen support plate inside the chamber.

5.5 Place the lid on the vacuum chamber and press the lid down to ensure contact between the lid and the chamber, and start the drying process. The unit will automatically stop when it determines the specimen is dry.

5.6 Remove the specimen, determine and record the mass.

5.7 Repeat sections 5.4, 5.5 and 5.6, as needed, until the specimen is dried to a constant mass per section 3.2.

5.8 Cool the specimen to room temperature at 25 ± 5ºC (77 ± 9ºF), and record the dry mass as *A*.

5.9 Immerse each specimen in water at 25 ± 1ºC (77 ± 1.8ºF) for 4 minutes ± 1 minute and record the immersed mass as *C*.

5 CoreDry (InstroTek® Inc.) Drying Method: (continued)

5.10 Remove the specimen from the water. Damp-dry the specimen *(Note 1)* by blotting with a damp terry cloth towel and determine the Saturated Surface Dry (SSD) mass as *B* as quickly as possible *(the entire operation is not to exceed 15 s)*. Any water that seeps from the specimen during the weighing operation is considered part of the saturated specimen. Immerse and weight each specimen individually.

Note 1 - Damp is considered to be when no water can be wrung from the towel that has been completely submerged in water.

5.11 Calculate the bulk specific gravity as given in section 7.1.

6 Suspension Method:

6.1 Apparatus:

Ensure equipment used meets the following requirements;

6.1.1 *Forced Air, Ventilated, or Convection Oven* – capable of maintaining mix design compaction temperature range.

6.1.2 *Weighing Device* –weighing device of sufficient capacity, readable to 0.1 percent of the sample mass, or better, and conforms to the requirements of AASHTO M 231. Use a device equipped with suitable suspension apparatus and holder to permit weighing the specimen while suspended from center of the scale pan of the weighing device.

6.1.3 *Suspension Apparatus* – the wire suspending the container must be the smallest practical size to minimize any possible effects of a variable immersed length. The suspension apparatus must enable the container to be immersed to a depth sufficient to cover it and the test sample during weighing. Ensure no trapped air bubbles exist under the specimen.

6.1.4 *Water Bath* - for immersing the specimen in water while suspended under the balance, equipped with an overflow outlet for maintaining a constant water level.

6.2 Procedure:

6.2.1 Dry the specimen to a constant mass at a temperature of 125 ± 5°F (52 ± 3°C).

6.2.2 Cool the specimen to room temperature at 25 ± 5ºC (77 ± 9ºF), and record the dry mass as *A*.

6.2.3 Immerse each specimen in water at 25 ± 1ºC (77 ± 1.8ºF) for 4 minutes ± 1 minute and record the immersed mass as *C*.

6.2.4 Remove the specimen from the water. Damp-dry the specimen *(see Note 1 in section 5.10)* by blotting with a damp terry cloth towel, and determine the Saturated Surface Dry (SSD) mass as *B* as quickly as possible, *(the entire operation is not to exceed 15 s)*. Any water that seeps from the specimen during the weighing operation is considered part of the saturated specimen. Immerse and weight each specimen individually.

7 Calculation:

7.1 Calculate the bulk specific gravity of the specimen as follows:

$$G_{mb} = \frac{A}{(B-C)}$$

where:

G_{mb} = Bulk Specific Gravity

A = mass in grams of the specimen in air

B = mass in grams of the surface-dry specimen in air

C = mass in grams of the specimen in water

7.2 Calculate the percent of water absorbed by the specimen (on a volume basis) as follows:

$$Percent\ of\ Water\ Absorbed\ by\ Volume = \frac{(B-A)}{(B-C)} \times 100$$

8 Report:

8.1 Include the following:

8.1.1 The method used (CoreDry or Suspension).

8.1.2 Bulk Specific Gravity reported to the nearest thousandth, 0.001.

8.1.3 Absorption reported to the nearest hundredth 0.01%.

METHOD OF SAMPLING AND TESTING
MT 316-04
METHOD OF SAMPLING RECYCLED PAVEMENT AND FIELD CONTROL OF RECYCLE PAVING

1 General:

1.1 This method is divided into four sections which are as follows:

1.2 **Section A**: Sampling pavement for Cold Recycling

1.3 **Section B:** Field Control of Cold Recycle Paving

1.4 **Section C**: Sampling Pavement for Hot Recycling

1.5 **Section D**: Field Control of Hot Recycle Paving

Each section of this method is to be used specifically for its respective purpose related to recycle paving.

SECTION A:

2 Sampling Pavement for Cold Recycling

2.1 Scope:

2.2 This section describes the procedure for sampling roadways for cold mix recycling. The first portion describes sampling procedures for design information to determine if recycling is possible. The second portion describes sampling procedures for mix design purposes.

3 Procedure:

3.1 Preliminary Sampling for Proposed Recycled Pavement

3.1.1 The project should be divided into at least three areas from which milled or cored samples are obtained. A minimum of three representative sample locations should be visually selected in each area. Samples weighing approximately sixty pounds and representative of the lifts to be recycled should be obtained from each location. If maintenance patches or other intermittent treatments occur within the area, the locations that samples were taken should be recorded and the samples properly labeled. The proposed depth for recycling the pavement should be recorded.

3.1.2 Sampling a Cold Recycled Pavement for Mix Design: Milled Sampling

3.1.2.1 The project should be divided into at least three areas from which samples are obtained. A minimum of three locations should be used for each area of sampling. Submit approximately one hundred pounds of milled plant mix from each location. Three core samples should be taken to correspond with each milled area. The core samples should be placed into sealed containers at the job site so that in-place moisture contents may be determined.

3.1.3 Submitting Samples:

3.1.3.1 Samples from different locations are to be kept separate and submitted to the Materials Bureau for testing. Pertinent information such as locations at which samples were taken and depth to which milling was performed should be submitted with the samples.

SECTION B:

4 Field Control of Cold Recycle Paving:

4.1 Scope:

4.1.1 This section describes the procedure for field control of cold recycle paving. The test procedure utilizes standard 50 blow Marshall specimens. The Marshall specimens will be fabricated at the job site and then transported to the Materials bureau for compression testing.

4.1.2 Material should be secured from either the feed hopper of the laydown machine or the windrow, depending on the paving operation. Enough material (at least 25 lbs.) should be obtained for both the molding of briquettes and moisture determination.

5 Procedure:

5.1 Determination of Moisture Content:

5.1.1 For moisture determination, a representative sample of 2000 grams shall be weighed and placed in a 140°F oven.

5.1.2 The sample shall be weighed at intervals with weight losses recorded until a stabilized condition is achieved. A moisture loss of less than 1.0 gram in one hour should be considered a stabilized condition. Moisture content may be determined by:

$$MoistureContent(\%) = \frac{WT(Initial) - WT(final)(100\%)}{WT(final)}$$

5.2 Briquette Fabrication:

5.2.1 Apparatus:

5.2.1.1 *Scoops*

5.2.1.2 T*hermometer*, - 50° to 150°F

5.2.1.3 *Balance* - 2 kg. Capacity for weighing batch samples and briquettes

5.2.1.4 *Mixing spoons*

5.2.1.5 *Spatulas*

5.2.1.6 *Standard Marshall compaction pedestal* - with molds and compaction hammer

5.2.1.7 *Extrusion jack*

5.2.1.8 Gloves and marking crayons

5.2.1.9 Pans for holding and warming specimens

5.2.1.10 *Oven* - capable of maintaining 140°F ±5°F

6 Preparation of Test Specimens:

6.1 Prepare three specimens for each test.

6.2 Thoroughly clean molds and hammer face. Place paper disk in bottom of molds. Warm molds and hammer to remove chill.

6.3 Weigh out individual briquette samples. It is recommended that a trial briquette, approximately 1140 grams, be molded initially to determine height. Weight of material should then be adjusted to produce 2-1/2" ±0.05" specimens.

6 Preparation of Test Specimens:

6.4 Warm individual specimens in 140°F oven for two hours. Note: This process has been found to develop a density of mix equal to the roller compaction on the roadway.

6.5 Mold briquettes using standard Marshall procedures (i.e., 50 blows applied to each face).

6.6 Curing specimens in molds for up to 24 hours before extruding may be necessary if distortion occurs at an earlier extrusion time. Molds should be placed on their sides to permit equal ventilation of both ends (remove paper disks).

6.7 Carefully extrude specimens from molds.

6.8 If, when extruded, briquettes are sufficiently strong to enable handling, proceed to weigh in air, weigh in water and weigh saturated surface dry.

6.9 If, when extruded, briquettes are too tender to handle, curing will be required until they can be handled. The bulk specific gravities may then be determined.

Bulk specific gravity is calculated as follows:

$$BulkSpecificGravity(BSG) = \frac{WTinAir}{WT(SSD) - WTinWater}$$

6.9 Once bulk specific gravities have been determined, carefully transport the specimens to the Materials Lab for compression testing.

6.10 Report the specific gravities that were measured and the location represented by the samples. The samples must be protectively wrapped for shipping and they must be numbered sequentially to maintain control of their origin and history.

7 Utilization of Final Record Samples:

7.1 The final record pavement core samples taken in accordance with MT 602 are designated for research. As soon as possible, these should be sent to the Materials Bureau, accompanied by Form No. 31. The location and sample number are to be entered on the form and the wrapped cores are to be sequentially numbered.

SECTION C:

8 Sampling Pavement for Hot Mix recycling:

8.1 Scope:

8.1.2 This section describes the procedure for sampling roadways for hot mix recycling. The first portion describes sampling procedures for design information to determine if recycling is possible. The second portion describes sampling procedures for mix design purposes.

9 Procedure:

9.1 Preliminary Sampling for Proposed Recycled Pavement:

9.1.2 The project should be divided into at least three areas from which milled or cored samples are obtained. A minimum of three representative sample locations should be visually selected in each area. Samples weighing approximately sixty pounds and representative of the lifts to be recycled should be obtained from each location. If maintenance patches or other intermittent treatments occur within the area, the locations that samples were taken from should be recorded and the samples properly labeled. The proposed depth for recycling the pavement should be recorded.

9.1 Preliminary Sampling for Proposed Recycled Pavement: (continued)

To complete assessment of a potentially recyclable pavement, submit information about sources of aggregate used on the original project. In addition, send a minimum of 350 pounds of material to the Materials Bureau from a source which may be used as a virgin aggregate in the recycle mix.

10 Sampling a Hot Recycled Pavement for Mix Design:

10.1 Milled Sampling:

10.1.1 The project should be divided into at least three areas from which samples are obtained. A minimum of three locations should be used for each area of sampling. Submit approximately one hundred pounds of milled plant mix from each location. Three core samples should be taken to correspond with each milled area.

11 Stockpile Sampling:

11.1 Stockpiles of crushed reclaimed plant mix shall be sampled in accordance with MT 201, paragraph 10.

Note - Stockpile sampling requires particular care to avoid segregation. Samples should be taken from a near vertical face and should be secured by reducing the sample to 300-pounds by the quartering method or with a sample splitter. Due to the time required t extract and analyze the reclaimed plant mix, samples should be submitted as soon as one-third of the reclaimed mat stockpile has been produced.

11.2 To complete the mix design, 350 pounds of aggregate from the stockpiles of virgin aggregate, along with the appropriate forms, are required. The samples and documentation may be submitted when, in the judgment of the Project Manager, they are representative of the material to be incorporated into the recycled plant mix.

SECTION D:

12 Field Control of Hot Recycle Paving:

12.1 Scope:

12.1.2 This section describes the procedure for field control of hot recycle paving.

13 Procedure:

13.1 The crushed reclaimed mate shall be sampled in accordance with MT 201, paragraph 11: "Production sample shall be taken not less than every four hours. The sample shall be sieved and the percentage of oversize recorded. One sample of approximately 15 pounds shall be taken and submitted to the Materials Bureau every three days."

13.2 The aggregate incorporated into the mix shall be subject to all of the controls of a normal plant mix operation. The output of the plant will be subjected t field control Marshall testing with the same frequency as a conventional mix.

13.3 Monitors of established production of recycled plant mix shall be taken the first three days and the first day of every week thereafter or until otherwise informed by the Materials Bureau.

13.4 The samples shall be placed in a new double paper bag with completed form No 98 inserted between the sacks to keep it clean. The bag should be securely tied and marked as to sample number, stationing, lane and lift. This same information shall be placed on each Daily Plant Mix Report. Several of these paper bags can be packed into a sample sack for transmittal to the laboratory. Care should be taken to see that no movement is possible, or broken bags and mixed samples will result.

14 Utilization of Final Record Samples:

14.1 The final record pavement core samples taken in accordance with MT 602 are designated for research. As soon as possible, these should be sent to the Materials Bureau, accompanied by Form No. 31. The location and sample number are to be entered on the form and the wrapped cores are to be sequentially numbered.

METHODS OF SAMPLING AND TESTING
MT 319-14
DETERMINING THE ASPHALT BINDER CONTENT OF PLANT MIX SURFACING (PMS) BY THE IGNITION METHOD
(*Modified AASHTO T 308*)

1 Scope

1.1 This test method covers the determination of asphalt binder content of Plant Mix Surfacing (PMS) mixtures by ignition at temperatures that reach the flashpoint of the binder in a furnace. The means of specimen heating may be the convection method or the direct infrared (IR) irradiation method.

1.2 The values in metric units are to be regarded as the standard.

1.3 This standard may involve hazardous materials, operations, and equipment. This standard does not purport to address all of the safety problems associated with its use. It is the responsibility of the user of this standard to consult and establish appropriate safety and health practices and determine the applicability of regulatory limitations prior to use.

2 Referenced Documents

AASHTO
M 231 Weighing Devices Used in the Testing of Materials
T 308 Determining the Asphalt Binder Content of Hot Mix Asphalt (HMA) by the Ignition Method

MT Materials Manual
MT 202 Sieve Analysis of Fine and Coarse Aggregates
MT 303 Sampling Bituminous Paving Mixtures
MT 309 Splitting Samples of Plant Mix Surfacing to Testing Size
MT 312 Determining Moisture Content of Bituminous Mixtures
MT 320 Mechanical Analysis of Aggregate Recovered from Ignition Oven Burn
MT 325 Determining Moisture Content of Bituminous Mixtures or Aggregate Using Microwave Ovens

3 Summary of Test Method

3.1 The asphalt binder in the paving mixture is ignited using the furnace equipment applicable to the particular method. The asphalt binder content is calculated as the difference between the initial mass of the PMS and the mass of the residual aggregate. The asphalt content is expressed as mass percent of moisture-free mixture. This method may be affected by the type of aggregate in the mixture. Accordingly, to optimize accuracy, establish correction factors for asphalt binder and aggregate by testing a set of correction factor specimens for each type of PMS.

4 Significance and Use

4.1 This method can be used for quantitative determinations of asphalt binder content and gradation in PMS mixtures and pavement specimens for quality control, specification acceptance, and mixture evaluation studies. This method does not require the use of solvents. Use aggregate obtained by this test method for gradation analysis according to MT 320.

5 Apparatus

Ensure equipment used meets the following requirements:

5.1 *Ignition furnace* - A forced air ignition furnace that heats the specimen by either convection method or direct IR irradiation method. Use a convection-type furnace capable of maintaining a temperature at 578°C (1072°F). Use a furnace containing an internal balance thermally isolated from the furnace chamber and accurate to 0.1 g. The balance must be capable of weighing a 3500 gram specimen in addition to the specimen baskets. A data collection system is included so

that the weight can be automatically determined and displayed during the test. The furnace has a built in computer program to calculate change in mass of the specimen and provide for the input of a correction factor. The furnace chamber and basket dimensions must be adequate to accommodate a specimen size of up to 3500 grams. The furnace provides an audible alarm and indicator light when the specimen mass loss does not exceed 0.01 percent of the total specimen mass for three consecutive minutes. The furnace door is equipped so that the door cannot be opened during the ignition test. The furnace must be vented into a hood or to the outside. The furnace is equipped with a fan capabile to pull air through the furnace to expedite the test and to reduce the escape of smoke into the laboratory.

5.2 *Specimen basket(s)* - of appropriate size that allows the specimens to be thinly spread and allows air to flow through and around the specimen particles. Ensure sets with 2 or more baskets are nested. Completely enclose the specimen with screen mesh, perforated stainless steel plate, or other suitable material.

Note 1 – Screen mesh or other suitable material with maximum and minimum opening of 2.36 mm (No. 8) and 600 microns (No. 30), respectively, has been found to perform well.

5.3 *Catch Pan* - of sufficient size to hold the specimen basket(s) so that aggregate particles and melting asphalt binder falling through the screen mesh are caught.

5.4 *Oven* - capable of maintaining mix design compaction temperature.

5.5 *Balance* - of sufficient capacity and conforming to the requirements of AASHTO M 231, Class G 2, for weighing specimen in basket(s).

5.6 *Safety Equipment* - face shield, high temperature gloves, a heat resistant surface capable of withstanding 650°C (1202°F) and a protective cage capable of surrounding the specimen baskets during the cooling period.

5.7 *Miscellaneous Equipment* - a pan larger than the specimen basket(s) for transferring specimen after ignition; spatulas, bowls, wire brushes, and other manufacturer's equipment.

6 Sampling

6.1 Obtain samples of freshly produced PMS in accordance with MT 303.

6.2 Obtain the test specimen by splitting a sample taken in accordance with MT 309.

6.3 If the mixture is not sufficiently soft to separate with a spatula or trowel, place it in a large flat pan or glass dish in an oven (conventional or microwave). Heat the specimen to separate. Excessive heat may cause asphalt drain down or oxidation to occur, altering the results.

6.4 The size of the test specimen is governed by the nominal-maximum aggregate size of the PMS and must conform to the mass requirement shown in Table 1. Ensure the specimen is no more than 400 grams greater than the minimum recommended specimen mass.

Note 2 – Large specimens *of fine mixes tend to result in incomplete ignition of asphalt.*

Table 1—Mass Requirements

Nominal Max Agg Size, mm	Sieve Size	Min Mass of Specimen, g
4.75	No. 4	1200
9.5	⅜ in.	1200
12.5	½ in.	2000
19.0	¾ in.	2000
25.0	1 in.	3000
37.5	1½ in.	4000

7 Test Procedure

7.1 Test Initiation:

7.1.1 For the convection-type furnace, preheat the ignition furnace to 538°C (1000°F) or as determined in ANNEX A1.9.1. Manually record the furnace temperature (set point) prior to the initiation of the test if the furnace does not record automatically.

7.1.2 For the direct IR irradiation-type furnace, preheat furnace to 420°C (788°F) or manufacturer's recommendation. Use the same burn profile as used during the correction factor determination.

7.2 Determine the moisture content of the specimen according to MT 312 or MT 325 at the beginning and middle of each production day and as needed.

7.3 Apply the correction factor for the specific mix to be tested as determined in ANNEX A1 in the ignition furnace.

7.4 Weigh and record the mass of the specimen basket(s) and catch pan (with guards in place) to the nearest 0.1 gram.

7.5 Prepare the specimen as described in Section 6. Place the specimen basket(s) in the catch pan. Evenly distribute the specimen in the specimen basket(s), taking care to keep the material away from the edges of the basket. Use a spatula or trowel to level the specimen.

7.6 Weigh and record the total mass of the specimen, basket(s), catch pan, and basket guards. Calculate and record the initial mass of the specimen (total mass minus the mass of the specimen basket assembly).

7.7 Input the initial mass of the specimen to 0.1 gram for direct IR irradiation-type furnace or 1 gram for convection-type furnace into the ignition furnace controller. Verify that the correct mass has been entered.

7.8 Open the chamber door and place the specimen basket assembly in the furnace, carefully positioning the specimen basket assembly so it is not in contact with the furnace walls. Close the chamber door, and verify that the specimen mass (including the basket assembly) displayed on the furnace scale equals the total mass recorded in Section 7.6 within ± 5 grams. (Note 4) An indication that the specimen basket assembly is contacting the furnace wall is a difference greater than 5 g or failure of the furnace scale to stabilize.

Initiate the test by pressing the start/stop button. This operation will lock the specimen chamber and start the combustion blower.

Note 3 – The furnace temperature will drop below the set point when the door is opened, but will recover with the door closed and when ignition occurs. Specimen ignition typically increases the temperature well above the set point, depending on specimen size and asphalt binder content.

Note 4 – The weights obtained from external weighing take precedence over those obtained from the internal balance.

7.9 Allow the test to continue until the stable light and audible alarm indicate the test is complete (the change in mass does not exceed 0.01 percent for three consecutive minutes). Press the start/stop button. This will unlock the specimen chamber door.

7.10 Open the chamber door, remove the specimen basket assembly, allow specimen to cool to room temperature and weigh. During cooling, ensure specimen basket assembly is protected from contaminates.

7.11 Calculate the corrected asphalt binder content (percent) from the external weighing according to the following equation:

$$Pb,\% = \left[\frac{(Mi - Mf)}{Mi} X100 \right] \pm Cf - MC$$

Pb = the measured (corrected) asphalt binder content, percent
Mi = the total mass of the PMS specimen prior to ignition, g
Mf = the total mass of aggregate remaining after the ignition, g
Cf = the correction factor, percent by mass of PMS specimen
MC = the moisture content of the PMS

8 Extraction of Residual Aggregate for Gradation

8.1 Cool the contents of the specimen baskets to room temperature prior to performing the gradation analysis. Empty the contents of the baskets into a flat pan, being careful to capture all the material. Use a small wire sieve brush to ensure that any residual fines are removed from the baskets and catch pan.

8.2 Weigh the specimen and perform the gradation analysis according to MT 320.

9 Report

9.1 Report the corrected asphalt binder content to the nearest 0.01%, correction factor, temperature compensation factor (if applicable), total percent loss, specimen mass and moisture content (if determined).

ANNEX

A1 Correction Factors

A1.1 Asphalt binder content results may be affected by the type of aggregate in the mixture and the ignition furnace. Accordingly, to optimize accuracy, establish a correction factor by testing a set of correction factor specimens for each type of PMS. Perform this procedure before any acceptance testing is completed. Repeat the process for determining a correction factor each time there is a new or transferred PMS design. Determine a unique correction factor for each ignition furnace in the location where testing is to be performed.

A1.2 *Asphalt binder correction factor* – Certain aggregate types may result in unusually high correction factors (greater than 1.0 percent). Such mixes must be corrected and tested at a lower temperature, as described below. Determine a unique asphalt binder correction factor for each ignition furnace in the location where testing will be performed.

A1.3 *Aggregate correction factor* – Due to potential aggregate breakdown during the ignition process, determine a unique aggregate correction factor for each ignition furnace in the location where testing will be performed when the following conditions occur: aggregates that have a proven history of excessive breakdown; or aggregates are from an unknown source.

A2 Correction Factor Procedure

A2.1 According to the requirements of Section 6, prepare a minimum of four correction specimens at the job mix formula design asphalt content and gradation using only virgin material in a buttered bowl. Sample aggregate used for the correction factor specimens from stockpiled material produced and designated for use on the candidate project. An additional "blank" (aggregate only) specimen is provided for aggregate gradation comparison according to MT 320. The washed gradation must fall within the mix design tolerances. *(Note 5)*

Note 5 – Helena Mix Design Laboratory will prepare all correction specimens. MDT Materials Bureau personnel with notify project personnel if aggregate degradation is apparent and to proceed according to Sections Annex A3 and A5.

A2.2 Place the freshly mixed specimens directly in the specimen basket~~s~~ assembly. If allowed to cool, heat the specimens in a conventional oven to compaction temperature. Do not preheat the specimen basket~~s~~ assembly.

A2.3 Test the specimens in accordance with Sections 7 and 8.

A2.4 **After burning the appropriate number of calibration specimens,** determine the measured asphalt binder contents for each specimen by calculation or from the printed tickets.

A2.5 If the difference between the measured asphalt binder contents of the 2 specimens exceeds 0.15 percent, repeat the 2 tests and, from the 4 tests, discard the high and low results. Determine the correction factor from the 2 remaining results. Calculate the difference between the actual and measured asphalt binder contents for each specimen. The correction factor is the average of the differences expressed in percent by weight of the asphalt mixture.

A3 Correction Factor Ignition Oven Temperature Adjustment

A3.1 For the convection-type furnace, if the correction factor exceeds 1.0 percent, lower the test temperature to 482 ± 5°C (900 ± 8°F) and repeat test. Use the correction factor obtained at 482°C (900 ± 8°F) even if it exceeds 1.0 percent.

A3.2 For the direct irradiation-type furnace, use Option 2 burn profile for most materials. Option 1 is designed for very soft aggregate (such as dolomites) that typically require a large aggregate correction factor (greater than 1%). Option 2 is designed for specimens that may not burn completely using the DEFAULT burn profile and is appropriate for most of Montana aggregates.

A4 Procedure Temperature

A4.1 For the convection-type furnace, the temperature for testing PMS specimens in Section 7.1.1 is the same temperature selected for testing mixture correction specimens.

A4.2 For the direct IR irradiation-type furnace, the burn profile for testing PMS specimens in Section 7.1.2 is the same burn profile selected for testing mixture correction specimens.

A5 Aggregate Correction Factor

A5.1 Perform a gradation analysis on the residual aggregate in accordance with MT 320, if required. Utilize the results to develop an aggregate correction factor. Calculate and report to the nearest 0.1 percent.

A5.2 From the gradation results, subtract the percent passing for each sieve for each specimen from the percent passing each sieve of the “blank” specimen gradation results from Section A2.1.

A5.3 Determine the average difference for the 2 values. If the difference for a single sieve exceeds the allowable difference for that sieve as listed in Table A1, apply aggregate gradation correction factors (equal to the resultant average differences) for all sieves, to all acceptance gradation test results determined by MT 320, prior to final rounding and reporting. If the 0.075-mm (No. 200) sieve is the only sieve outside the limits in Table A1, apply the aggregate correction factor to only the 0.075-mm (No. 200) sieve.

Table A1 – Permitted Sieving Difference

Sieve Size	Allowable Difference
Sizes larger or equal to 2.36 mm (No. 8)	±5.0%
Sizes larger than 0.075 mm (No. 200) and smaller than 2.36 mm (No. 8)	±3.0%
Sizes 0.075 mm (No. 200) and smaller	±0.5%

A6 Burn Oven Worksheet

METHODS OF SAMPLING AND TESTING
MT 320-14
MECHANICAL ANALYSIS OF AGGREGATE RECOVERED FROM IGNITION OVEN BURN

1 Scope

1.1 This test method is a procedure for the determination of the particle size distribution using square mesh sieves of fine and coarse aggregates recovered from bituminous mixtures by MT319.

2 Referenced Documents

AASHTO Standards
M 231 Weighing Devices Used in the Testing of Materials

MT Materials Manual
MT 319 Determining the Asphalt Binder Content of Plant Mix Surfacing (PMS) by the Ignition Method
MT 405 Wire Cloth Sieves for Testing Purposes
MT 607 Reducing Field Samples of Aggregate to Testing Size

3 Terminology

3.1 *Constant mass* – the state at which a mass does not change more than 0.10 percent, after additional drying for a defined time interval in Table 3.1

Table 3.1
Methods of Drying

Heat Source	Specific Instructions	Drying increments (minutes)
Controlled: Forced draft (preferred), ventilated, or convection oven	110 ±5°C (230 ±9°F)	30
Uncontrolled: Hot plate, Heat Lamp, etc.	Stir frequently	20
Microwave	Heap sample and cover with ventilated lid	10

4 Significance and Use

Use this method to determine the grading of aggregates extracted from bituminous mixtures. Use the results to determine compliance of the particle-size distribution with applicable specification requirements.

5 Apparatus

Ensure equipment used meets the following requirements:

5.1 *Balance* – balance or scale with a capacity larger than the size of the sample being tested. Use a balance or scale with sensitivity of 0.1 gram and in accordance with AASHTO M 231.

5.2 *Sieves* – square mesh sieves mounted on substantial frames constructed to prevent loss of material during sieving. Select suitable sieve sizes to furnish the information required by the specifications covering the material being tested. Ensure the sieves conform to the requirements of MT 405 Wire Cloth Sieves for Testing Purposes.

5.3 *Mechanical Sieve Shaker* - A mechanical sieving device creating a motion of the sieves that causes the particles to bounce, tumble, or otherwise turn so as to present different orientations to the sieving surface. Excessive time (more than 10 minutes) to achieve adequate sieving may result in degradation of the sample.

5.4 *Heat Source* - Oven, Hot Plate or alternate heating source.

5.5 *Wetting Agent* – Any dispersing agent, such as dishwashing detergent, or a soap that promotes separation of the fine materials.

5.6 *Container and utensils* - A container sufficient to contain the sample covered with water and to permit vigorous agitation without inadvertent loss of any part of the sample or water.

5.7 *Mechanical Washing Apparatus (Optional)* – A mechanical washing apparatus, if used, must provide results that are consistent with those obtained by use of manual operations.

6 Sample

6.1 Ensure the sample consists of the entire sample of aggregate obtained in accordance with MT 319.

Note 1 – If the sample is overloading screens, split or quarter the sample in accordance with MT 607, Procedure for Reducing Field Samples of Aggregate to Testing Size. Grade each part of the sample separately and combine the weights to obtain a representative gradation. Use the following table to determine if screens are overloaded.

MAXIMUM WEIGHT RETAINED				
Screen Size	8-inch (203 mm) Diameter Screen		12-inch (304.8 mm) Diameter Screen	
	Maximum Grams	Maximum Pounds	Maximum Grams	Maximum Pounds
1 ¼-inch (31.75 mm)			3821.9	8.4
1-inch (25.0 mm)			3057.5	6.7
¾-inch (19.0 mm)			2598.9	5.7
⅝-inch (16.0 mm)			2293.2	5.1
½-inch (12.5 mm)			1987.4	4.4
⅜-inch (9.5 mm)			223.0	2.7
No. 4 (4.75 mm)			318	0.7
No. 8 (2.36 mm)	194	0.4	436.5	0.9
No. 10 (2.00 mm)	194	0.4	436.5	0.9
No. 16 (1.18 mm)	194	0.4	436.5	0.9
No. 30 (0.600 mm)	194	0.4	436.5	0.9
No. 40 (0.425 mm)	194	0.4	436.5	0.9
No. 50 (0.300 mm)	194	0.4	436.5	0.9
No. 80 (0.180 mm)	194	0.4	436.5	0.9
No. 100 (0.150 mm)	194	0.4	436.5	0.9
No. 200 (0.075 mm)	194	0.4	436.5	0.9

7 Procedure

7.1 Dry the sample to constant mass. The total mass of aggregate in the bituminous mixture being tested is the sum of the mass of the dried aggregates and the mineral matter contained in the extracted asphalt.

7.2 Place the test sample in a container and cover with water. Add a detergent, dispersing agent, or other wetting solution to the water to ensure a thorough separation of the material passing the No. 200 sieve from the coarser particles. Add just enough wetting agent to produce a small amount of suds when the sample is agitated. The quantity depends on the hardness of the water and the quality of the detergent. Excessive suds may overflow the sieves and carry some material with them. Agitate the contents of the container vigorously and immediately pour the wash water over a nest of 2 sieves consisting of a No. 10 or 16 sieve superimposed on a No. 200 sieve. Use a large metal spoon to stir and agitate the aggregate in the wash water.

7.3 Ensure the agitation is sufficiently vigorous to result in the complete separation of the coarse particles from all particles finer than the No. 200 sieve and bring them into suspension in order that they may be removed by decantation of the wash water. Take care to avoid, as much as possible, the decantation of the coarse particles of the sample. Repeat the operation until the wash water is clear. Do not overflow or overload the No. 200 sieve.

7.4 Return all material retained on the nested sieves to a drying container. Dry the washed aggregate in the container to constant mass in an oven or alternate heating source. Weigh the sample and record to the nearest 0.1 gram.

7.5 Cool the aggregate and mechanically sieve over sieves of the various sizes required by the specification, for approximately 10 minutes. Record the weight of material passing each sieve and the amount passing the No. 200 sieve.

8 Calculations

8.1 Convert the individual weights retained to total weight passing each of the various sieves. Divide the total weight passing by the total weight of the sample, multiply by 100, which will result in the percent passing.

8.2 Ensure the total mass of the material after sieving closely aligns with the original mass of the sample placed on the sieves (dry mass after washing). Confirm the sum of these masses is within 0.2 percent of the mass after wash.

8.2.1 Calculate the percent change using the constant mass equation:

$$\frac{M_1 - M_2}{M_1} \times 100 = \%\ Change$$

Where:

M_1 = mass prior to sieving
M_2 = total mass after sieving

9 Report

9.1 Report the results of the sieve analysis as the total percentages passing each sieve size and report to the nearest whole number for all material coarser than the 200 mesh. Report the 200 mesh material to one tenth of one percent (0.1). Calculate the percentages on the basis of the total initial weight (before wash) of the sample, including any material finer than the 200 mesh sieve.

GRADATION WORKSHEET EXAMPLE

Date:_____ Project/Termini_____

Contract ID_____Sample Number_____

Before Wash 2405 After Wash 2352.2 LBW 52.8

Wt. Retained		Wt. Pass.	Percent Passing
0.0	25M	2405	100
144.0	19M	2261	94
312.0	12.5M	2093	87
673.0	9.5M	1732	72
1322.0	4.75M	1083	45
1538.0	2.36M	867	36
1827.1	1.18M	577.9	24
2019.1	0.60M	385.9	16
2115.1	0.30M	289.9	12
2163.1	0.15M	241.9	10
2259.1	0.075M	145.9	6.1
2352.0	Dry Pan	53.0	

Remarks:

All weights are recorded to 0.1 of a gram.

GRADATION WORKSHEET

Date:_____ Project/Termini_____

Contract ID_____Sample Number_____

Before Wash _____ After Wash _____ LBW _____

Wt. Retained		Wt. Pass.	Percent Passing
_____	25M	_____	_____
_____	19M	_____	_____
_____	12.5M	_____	_____
_____	9.5M	_____	_____
_____	4.75M	_____	_____
_____	2.36M	_____	_____
_____	1.18M	_____	_____
_____	0.60M	_____	_____
_____	0.30M	_____	_____
_____	0.15M	_____	_____
_____	0.075M	_____	_____
_____	Dry Pan	_____	

Remarks:

All weights are recorded to 0.1 of a gram.

METHOD OF SAMPLING AND TESTING
MT 321-14
DETERMINING THEORETICAL MAXIMUM SPECIFIC GRAVITY OF BITUMINOUS PAVING MIXTURES - "RICE GRAVITY"
(*Modified AASHTO T 209*)

1 Scope

1.1 This test method covers the determination of theoretical maximum specific gravity (commonly referred to as Rice Gravity) of un-compacted bituminous paving mixtures.

2 Referenced Documents

AASHTO
T 209 Theoretical Maximum Specific Gravity and Density of Hot Mix Asphalt (HMA)

MT Materials Manual
MT 303 Sampling Bituminous Paving Mixtures
MT 309 Splitting Samples of Plant Mix Surfacing to Testing Size
MT 325 Determining Moisture Content of Bituminous Mixtures or Aggregate Using Microwave Ovens

3 Terminology

3.1 *Residual pressure, as employed by this test method* – the pressure in a vacuum vessel when vacuum is applied.

3.2 *Specific gravity, as determined by this test method* – the ratio of a given mass of material at 25° C (77° F) to the mass of an equal volume of water at the same temperature.

4 Significance and Use

4.1 The theoretical maximum specific gravities of bituminous paving mixtures are basic properties whose values are influenced by the composition of the mixtures and types and amounts of aggregates and asphalt materials.

4.2 These properties are used to calculate percent air voids in compacted bituminous paving mixtures.

4.3 These properties provide target values for the compaction of bituminous paving mixtures.

4.4 These properties are essential when calculating the amount of asphalt binder absorbed by the internal porosity of the individual aggregate particles in bituminous paving mixtures.

5 Apparatus

Ensure equipment used meets the following requirements:

5.1 *Balance* – Capacity of 16,000 g sensitive to 0.1 g, to allow the maximum specific gravity of the un-compacted mix to be calculated to four significant figures (3 decimal places).

5.2 *Container* - 4000 mL volumetric flask. Ensure the flask, with a proper cover, is sufficiently strong to withstand a partial vacuum. Ensure the flask includes a rubber stopper and a hose connection. Confirm the top surfaces of all containers are smooth and substantially plane.

5.3 *Vacuum Pump* - Motor driven vacuum pump, capable of maintaining at least 25 mm of Hg of vacuum. The pump is used for removing air from the flask through the vacuum.

5.4 *Water Bath* - Water bath capable of maintaining constant temperature of 25 ± 0.6º C (77 ± 1º F), to fill the 4000 mL flask.

5.5 *Thermometer* – Liquid-in-glass thermometer accurate to 0.5° C (1° F).

6 Sampling

6.1 Obtain field samples in accordance with MT 303. Split field samples in accordance with MT 309.

6.2 Meet the sample size requirements in Table 1.

Table 1 – Minimum Sample Sizes

Nominal Maximum Aggregate Size	Minimum Sample Size
1" (25 mm)	2500g (5.50 lb.)
3/4" (19 mm)	2000g (4.40 lb.)
1/2" (12.5 mm)	1500g (3.30 lb.)
3/8" (9.5 mm)	1000g (2.20 lb.)
No. 4 (4.75 mm)	500g (1.10 lb.)

7 Standardization of Flasks

7.1 Volumetric flask and glass capillary stopper are standardized to accurately determine the mass of water, at 25 ± 0.5° C (77 ± 0.9° F), in the flask.

7.2 Fill the flask with water. Gently place the stopper in the flask ensuring proper seating. Ensure all air has been removed from the flask. Remove flask from water bath. Carefully towel dry the outside of the flask and stopper area. Weigh the flask with stopper and record the mass. Designate this mass as *E*.

7.3 Remove the stopper and decant a portion of the water back into the bath.

7.4 Repeat section 7.2 two (2) more times at the beginning of PMS production and periodically thereafter.

7.5 Record the average of the flask standardization masses. Designate this average mass as *E*. (See section 9.1)

Note 1 – Check standardization daily and re-standardize as needed or when there is a change in tester. Keep the equipment clean and free from any accumulation that would change the mass if the volume standardization is to remain constant. Do not subject glass vessels to vacuum if they are scratched or damaged.

8 Procedure

8.1 Obtain a sample size in accordance with section 6.2, Table 1.

8.2 Separate the particles of the sample, taking care not to fracture the mineral particles. The fine aggregate portion is all the material passing the ¼ inch (6 mm) sieve.

8.3 The sample may be heated at mix design compaction temperature if necessary to facilitate the breakup of the sample.

8.4 Cool the sample to approximately 77º F.

8.5 Remove flask (containing enough water at 77º F to cover the sample by approximately 1 inch). Towel dry the outside of the flask, place on scale, and tare the scale.

8.6 Add the test sample to the flask (about 2000 ml) at 25 ± 0.6ºC (77 ± 2º F). Weigh to the nearest 0.1g. Designate the mass of the sample as *D*.

8.7 Wet the mouth of the flask and seat the vacuum apparatus in the flask, to ensure a proper seal between the flask vacuum apparatus. Turn on the vacuum pump to remove entrapped air by subjecting the contents to a partial vacuum of 27.5 ± 2.5 Hg mm gauge pressure for 15 ± 2 minutes. (Note 2) Agitate the container and contents either continuously by mechanical device or manually by vigorous shaking at intervals of about 2 minutes.

Note 2 – The time the sample is under vacuum does not begin until the proper gauge pressure has been reached.

8.8 Turn off the vacuum pump, slowly open the release valve, and remove the vacuum apparatus.

8.9 Fill the flask with water (77 ± 2º F). Gently place the stopper in the flask ensuring proper seating and taking care not to introduce air into the sample. Bring contents to a temperature of 77 ± 2º F in the constant temperature bath within 10 ± 1 min after completing the vacuum procedure.

8.10 Remove flask from water bath. Carefully towel dry the outside of the flask and stopper area. Determine the mass of the flask filled with contents. Designate the mass of flask with water and sample as *C*.

9 Calculations

9.1 Calculate the average of the flask standardization masses as follows:

$$E = \left(\frac{E_1+E_2+E_3}{3}\right)$$

Where:
E = *average mass of standardized flask*
E_1 = *1st flask standardization mass*
E_2 = *2nd flask standardization mass*
E_3 = *3rd flask standardization mass*

9.2 Calculate the mass of the sample (dry mass) and mass of standardized flask:

$$F = D + E$$

Where:
F = mass of the sample (dry mass) and mass of standardized flask
D = mass of the sample (dry mass)

9.3 Calculate the volume of the sample as follows:

$$G = F - C$$

Where:
G = Volume of sample
C = mass of the standardized flask with contents (water and saturated sample)

9.4 Calculate the “Rice Gravity” of the sample as follows:

$$R = \frac{D}{G}$$

Where:
$R = G_{mm} =$ *theoretical maximum specific gravity of the mixture, “Rice Gravity”*

10 Report

10.1 Report the theoretical maximum specific gravity of the mixture, “Rice Gravity”, nearest thousandth, 0.001.

METHODS OF SAMPLING AND TESTING
MT 322-04
METHOD OF DETERMINING THE PERCENT OF ADHESION OF BITUMINOUS MATERIALS TO AGGREGATE
(*Montana Method*)

1 Scope

1.1 This test is intended to evaluate the resistance of a bituminized mixture to its bituminous film removal by water.

2 Apparatus

2.1 *Drying oven* - capable of maintaining a temperature of 248º F (120º C).

2.2 Electric hot plate

2.3 Various mixing pans

2.4 Putty knife

2.5 *Balance* - with a capacity of 500 grams

2.6 ¼" wire screen

2.7 ½ gallon can

2.8 Water

2.9 “Red Devil" or equal paint shaker

3 Preparation of Sample

3.1 The proposed aggregate is mixed with bituminous materials, which may be Asphalt Cement or Liquid Asphalt, or Emulsified Asphalt. The preparation of the sample, depending upon the type of bituminous materials, is as follows:

3.2 <u>Asphalt Cement or Liquid Asphalt</u>

3.2.1 Approximately 150 grams of plus ¼" aggregate and a sufficient quantity of the appropriate bituminous material are heated in separate containers in an oven at 248 ºF (120 ºC).

3.2.2 After heating, the aggregate is mixed on a hot plate with just enough bituminous material to thoroughly coat the aggregate surfaces. Avoid overheating the mix, as evidenced by smoking asphalt. A metal pan and putty knife are used to accomplish the mixing. The mixture is oven cured at 250 ºF (121 ºC) for one hour, then stirred and left to cool at room temperature.

3.3 <u>Emulsified Asphalt</u>

3.3.1 The test procedure varies somewhat at the preliminary stage when an emulsified asphalt is used. Add a sufficient quantity of the appropriate emulsion to approximately 150 grams of dry, cool, plus ¼" aggregate and stir until the sample is completely covered. Excess emulsion is drained off on an elevated 4 Mesh wire screen. The mixture is oven cured at 250 ºF (121 ºC) for a period of one hour. If CRS-2 is used, the aggregate must be pre-wetted.

4 Procedure

4.1 After the aggregate-bituminous mixture has cooled or cured for the prescribed time, it is removed from the mixing pan or draining screen with a putty knife.

Note – In order to facilitate removal, the mixture may be removed from the mixing pan or draining screen after the receptacle has been heated on a hot plate for approximately three seconds.

4.2 The mixture is then immersed in a half-gallon can containing one quart of water at 49 to 73 ºF (15 to 25 ºC) for twenty-four hours.

4.3 At the end of the soaking period, the mixture is shaken in a "Red Devil" or other approved paint shaker for five minutes, after which it is carefully washed to remove any loose bituminous material, and placed on a doubled layer of paper toweling. The sample is spread evenly over an area approximately five inches in diameter so that the paper is not visible through the sample.

5 Evaluation

5.1 Evaluation of adhesion is made only after the aggregate is thoroughly dry. A visual estimate of the proportion of the surfaces remaining coated with bituminous material is made and the results expressed as percent adhesion.

METHODS OF SAMPLING AND TESTING
MT 325-14
DETERMINING MOISTURE CONTENT OF BITUMINOUS MIXTURES OR AGGREGATE USING MICROWAVE OVENS

1 Scope

1.1 This test method provides a procedure for determining the amount of moisture in either bituminous mixtures or graded aggregates used in bituminous mixtures. Its primary purpose is to provide a rapid field test to permit quality assurance of bituminous mixtures and its use is strictly limited to moisture content determination.

2 Referenced Documents

AASHTO:
M 231 Weighing Devices Used in the Testing of Materials

MT Materials Manual
MT 201 Sampling Roadway Materials
MT 202 Sieve Analysis of Fine and Coarse Aggregates
MT 303 Sampling Bituminous Paving Mixtures
MT 309 Splitting Samples of Plant Mix Surfacing to Testing Size
MT 607 Reducing Field Samples of Aggregate to Testing Size

3 Terminology

3.1 *Constant Mass for Bituminous Mixtures* – the state at which a mass does not change more than 0.05 percent. Do not exceed the mix design mixing temperature. Use equation 7.1. If the % change is greater than 0.05 continue drying.

3.2 *Constant Mass for Aggregate* – the state at which a mass does not change more than 0.1 percent. Do not exceed the mix design mixing temperature. Use equation 7.2. If the % change is greater than 0.1 continue drying.

4 Apparatus

Ensure equipment used meets the following requirements:

4.1 *Microwave* - oven capable of holding 4000 g sample.

4.2 *Sample containers* - capable of holding 600 g (must be Pyrex, glass, porcelain, ceramic or paper plates).

4.3 *Balance* - with a 16,000 g capacity and sensitive to 0.1 g, conforming to requirements of AASHTO M 231.

4.4 *Miscellaneous Equipment* – Spatula, Gloves

4.5 *Airtight container* - capable of holding 2500 to 3000 g sample.

4.6 *Flat pan* - approximately 25 x 20 x 3 inches.

5 Sample Preparation

5.1 Obtain 2500 to 3000 g of bituminous mix (according to MT 303) or aggregate (according to MT 201).

5.2 Quarter the aggregate into two (2) 500 ± 50 gram samples. Reduce aggregate samples in size, if necessary, according to MT 607.

5.3 Reduce bituminous mixtures in size, as necessary, according to MT 309, to obtain two (2) 500 ± 50 g samples.

6 Procedure

6.1 Place sample in tared container, and weigh to the nearest 0.1 g.

6.2 Record sample temperature.

6.3 Put sample in microwave oven and turn oven on.

6.4 After two (2) minutes, turn the oven off, remove the container and sample, weigh the sample and container to the nearest 0.1 g, and record the weight and temperature.

6.5 Place sample and container back in the oven. Turn oven on and dry sample for two (2) additional minutes.

6.6 Remove sample and container from oven, weigh to the nearest 0.1 g, and record weight and temperature.

6.7 Repeat steps 6.3 through 6.6 until a constant mass is obtained.

6.8 Ensure the final sample temperature, when weighed, is within ±15°F of section 6.2.

Note 1 – Do not exceed mix design mixing temperature.

7 Calculations

7.1 After a constant weight has been obtained, calculate the moisture content for bituminous mixtures as follows:

$$Moisture\ Content\ of\ Bituminous\ Mixtures, \% = \left(\frac{M_i - M_f}{M_i}\right) \times 100$$

where:
Mi = mass of the initial, moist test sample
Mf = mass of the final, dry test sample

Record the moisture content of bituminous mixtures as the average of the two samples to the nearest 0.01%.

7.2 After a constant weight has been obtained, calculate the moisture content aggregate as follows:

$$Moisture\ Content, \% = \left(\frac{M_i - M_f}{M_f}\right) \times 100$$

where:
Mi = mass of the initial, moist test sample
Mf = mass of the final, dry test sample

Record the moisture content of aggregate as the average of the two (2) samples to the nearest 0.1%.

7.3 If the moisture contents of the two (2) samples differ by more than 0.2%, the test is invalid. In this case new samples must be prepared and the test re-run.

8 Precautions

8.1 Use gloves for handling hot mixtures during quartering and when placing in or removing from oven.

8.2 Do not use metal containers in oven at any time. Damage to the oven will occur.

8.3 Do not delay getting sample into oven after sampling. (If a delay of 15 minutes or more is anticipated, samples must be placed into and kept in sealed containers. For reliable results, all samples should be tested within 1 hour of sampling).

8.4 **DO NOT USE** the moisture content sample for additional testing.

METHOD OF SAMPLING AND TESTING
MT 328-14
ESTABLISHING FIELD TARGET DENSITY
FOR PLANT MIX SURFACING DENSITY CONTROL

1 Scope

1.1 This test method is the procedure for establishing the field target density for compaction control of bituminous mixtures.

2 Referenced Documents

MT Materials Manual

MT 321 Determining Theoretical Maximum Specific Gravity and Density of Bituminous Paving Mixtures – "Rice Gravity"

3 Procedure

3.1 Determine the maximum specific gravity of un-compacted bituminous paving mixtures in accordance with MT 321.

3.2 When two (2) maximum specific gravities of field samples have been determined using MT 321, average the results. Use the average for the field target Rice Gravity density. This target is effective retroactive to the start of plant mix production on the project.

Maintain documentation of the Theoretical Maximum Specific Gravity and Density of Bituminous Paving Mixtures (MT 321) to determine the target density and all changes during the contract.

3.3 When four (4) field Rice Gravities are completed, average the four (4) test values. If a change of 0.5 pound per cubic foot (8.0 kg per cubic meter) or greater is calculated change, to the new average Rice Gravity. This change is effective at the time the last sample was obtained.

Notify applicable Department personnel (e.g. Project Manager, Lab Supervisor, Lead Inspector) immediately of effective change with day, time and tonnage of the change.

3.4 As each additional field Rice Gravity is completed, add the results to the sum of the previous three (3) gravities and compute an average. If a change of 0.5 pound per cubic foot (8.0 kg per cubic meter) or greater is calculated from the last field target density, change to the new average Rice Gravity. This change is effective at the time the last sample was obtained.

METHODS OF SAMPLING AND TESTING
MT 329-04
PROCEDURE FOR EVALUATING PLANT MIX SURFACING FAILURES

1 Scope:

1.1 This method covers the step-by step procedure for evaluating a plant mix surfacing failure. The procedure calls for reviewing the types of plant mix failures and method for rating the distressed areas.

1.2 After determining the type and extent of the failure, further investigational requirements will include reviewing plant mix production records, visual analysis, deflection analysis, sampling analysis of plant mix, base and subgrade materials and surfacing design analysis. Based upon all the information and data gathered through this procedure, the causes, potential solutions and recommendations to correct the plant mix surfacing failures can be determined.

2 Visual Analysis:

2.1 The first step in investigating a pavement failure is to perform a complete and comprehensive visual analysis of the entire project emphasizing the distressed areas in question.

2.2 Determine the approximate milepost and/or stationing and length of each of the distressed areas. The following is a list of pavement distress types and a rating system to be used for the distress.

PAVEMENT FAILURE RATING SYSTEM
RATING

FAILURE TYPE			
Rutting	**Light**	**Modera te**	**Severe**
Rut Depth	0-1/2”	1/2 – 3/4”	3/4” & Greater
Rate of Rutting	0-1/8”/yr.	1/8 – 3/8”/yr.	3/8” yr.& Greater
Lateral Movement Of Rut (Humping)	None Visible		Visible Bulge
Cracking	Longitudinal Cracks In wheel paths (Load Associated)	Alligator or Block Cracking Tight	Alligator or Block Cracking Edges spaced – pieces loose or missing
*Stripping	Some asphalt material stripped	**Cores	**Cores
Ravelling	Fines removed from Surface.	1st layer coarse Aggregate removed	Pavement removed through one or more lifts.

*Any stripping should be noted.

**If the investigation requires plant mix cores, advanced stages of stripping will be determined at that time.

NOTE - If dual wheel ruts exist, they should be noted. Measurements should always be taken in both wheelpaths with a stringline stretched from centerline to the shoulder to obtain the measurements.

3 Report of Visual Analysis:

3.1 A summary of the visual analysis should be written immediately after the investigation.

3 Report of Visual Analysis: (continued)

3.2 The report should include date, reviewer, project termini, and detailed information concerning each distressed area. This information should include but not be limited to approximate milepost or station, length, width, relationship to centerline, lane and type of distress. Also, photographs of the typical distress on the project should be included. In addition to recording the types of pavement distress referenced above, record any other problems that are visible (drainage, terrain, frost problems, dips or swells, etc.). Based upon this visual analysis, the course of action and investigational requirements can be determined.

3.3 Copies of the report shall be sent to the District Engineer and the Materials Bureau Chief.

4 Deflection Analysis:

4.1 After the visual analysis report has been evaluated, the second step of this procedure will normally require Road Rater testing. The decision to have a Road Rate analysis will be determined based upon the visual analysis. When the decision has been made to use the Road Rater, the following are the steps that will be followed.

4.2 The Road Rater shall be used to determine the in-place strengths of each layer. An elastic modulus for each layer will be determined from the roadway deflections.

4.2.1 Deflection tests will be taken at 200-800 foot intervals throughout problem areas to determine the extent of the distress. In addition, the remainder of the project will be tested using the normal testing intervals (six tests per mile).

4.2.2 The deflection analysis will be reviewed for elastic modulus of each layer to determine the nature and extent of the problem. The required design overlay thickness analysis will then be performed.

5 Investigation Requirements:

5.1 Determine the investigational requirements depending on the type and extent of the plant mix failure. The following is a list of the distress types and requirements for each:

Distress Type	*Investigation Required
Cracking – Alligator	(1)-(7)
Rutting & Shoving	(1)-(7)
Stripping – Underlying Courses	(1)-(7)
Ravelling – Surface	(1),(3),(4)
Segregation	(1),(3),(4)

6 Investigational Requirements:

6.1 Physical Data: (information already obtained)
Location
Weather
Extent of Failure
Photos

6.2 Deflection Analysis: (information already obtained)
Road Rater testing – evaluate good and bad areas of the project.

6.3 Production Records: (a review of construction reports)

NOTE - When reviewing the reports listed below, look for any abnormalities.

Example: The production records generated during construction should be reviewed to determine if any problems during construction can be related to the pavement failure. For example there may have been some density problems in the same area of the failure, late paving, etc.

Mix Design
Plant Reports
Marshall Tests
Aggregate Tests
Compaction Tests
Monitor Samples
Project Diaries

6.4 Core Samples: Plant mix core samples shall be obtained and tested as follows:

NOTE - Lifts will be identified and tested separately.

Tests
Thickness
Density
Rice Gravity
A.C. Content
Gradation
HP-GPC
Abson Extraction – AC Penetration
Petrographic – Geology

Other tests to be determined by the Materials Bureau at the time of testing

7 Sampling In-Place Material:

R Value
Liquid Limit and Plastic Index
Moisture
Gradation
Proctor

8 Traffic Data:

Present ADL
Accumulative ADL

9 Structural Properties:

Gravel Equivalency – Surfacing Design

10 Samples and Testing Required:

10.1 Samples shall be taken so that the following tests and procedures can be run to evaluate the problem areas. The samples will be submitted to the Materials Bureau for testing unless otherwise specified.

10.2 ***Plant Mix Surfacing Core Samples:***

10.2.1 Samples shall be taken of each plant mix layer with at least five 4” cores from a bad area, a shoulder next to bad area, and good area. (See Figure 1 for sampling diagram.) If more than five distressed areas exist on a project, the minimum number of sample locations will be three if all distressed areas appear to be visually identical. If material or geological conditions change between distressed areas, each various condition shall be sampled. If the lifts are still intact they shall be separated using a coring saw if required. Each lift of plant mix shall be evaluated for:

10.2 ***Plant Mix Surfacing Core Samples:*** *(continued)*

Rice Gravity
Density
Thickness – Each core should be measured
Extracted Gradation (MT-202 or MT-327)
Extracted Percent Asphalt (MT307)
Abson Extraction – Asphalt Penetration
HP-GPC
Petrographic-Analysis

Figure 1 *Typical Coring Scheme*

```
PASSING LANE
                                                  (X)       (X)
                                            (X)       (X)       (X)
DRIVING LANE
                        FAILURE     X
                         X
                   X            X          X

SHOULDER
                   *   *   *   *   *
```

X – Samples within area of visible failure
*** -** Samples within same paver pass but not visibly failed
(X) – Samples from good area

10.3 Base and Subgrade:

10.3.1 When obtaining samples of the base and subgrade materials, a minimum 3-by-3-foot area of plant mix shall be taken in the wheelpath at each location. This should allow for adequate testing and sampling of each lift of material.

10.3.2 In-place densities and moisture shall be obtained for each lift using a nuclear gauge.

10.3.3 In-place moisture samples shall be taken of each lift and immediately placed in a sealable plastic sack. The sample size shall be a minimum of 1 lb. (450 grams). These samples shall then be oven dried to obtain a moisture content.

10.3.4 A minimum of two “R” value samples shall be taken from both the base and subgrade for a given problem area. In addition, one sample per mile shall be taken for the remainder of the project. The sample size will be determined in accordance with MT-207.

10.3.5 Samples and size of each lift shall be taken immediately and placed in a sealable plastic bag for soils classification (MT-214), plastic index and liquid limit (MT-208) in accordance with referenced procedures.

10.3.6 Samples of the base and subgrade shall be taken for a proctor test to establish the optimum moisture and density. The sample size shall be determined in accordance with MT-230.

11 Traffic Data:

11.1 Traffic data will be requested from the Planning and Statistics Bureau by the Materials Bureau. This data will be used by the Road Rater and Surfacing Design Sections to determine if any structural deficiencies exist. If the traffic section in the Planning Bureau feels traffic data may not reflect the true 18 Kip axle loads, a site specific investigation should be conducted by them.

12 Structural Analysis - Surfacing Design:

12.1 The surfacing Design personnel will check the design of the problem area based on the new “R” Values and the condition of the pavement structure in place.

13 Report:

13.1 A summary of the sample tests and other investigational requirements will be submitted upon completion of all testing of all testing and analysis.

METHOD OF SAMPLING AND TESTING
MT 331-14
SAMPLING AND EVALUATING
STRIPPING PAVEMENTS
(*Montana Method*)

1 Scope

1.1 This test method describes the procedure for sampling cores. Cores are used to evaluate existing structure, materials, pavement condition, lift thicknesses, and potential milling depth.

2 Sampling Procedure

2.1 *4-Lane Roadway*

Take a minimum of one (1) core per ½ mile of roadway in each direction. Alternate cores between the outside wheel path of the driving lane and the outside wheel path of passing lane. Pavement displaying a high extent or severity of cracking or raveling, rutting greater than 1/3 inch, and excessive patches, may require modification to the sampling frequency and location. If available, record the Global Positioning System (GPS) coordinates of core.

2.2 *2-Lane Roadway*

A minimum of one (1) core per ½ mile of roadway, taken in the outside wheel path and in alternating lanes. Pavement displaying a high extent or severity of cracking or raveling, rutting greater than 1/3 inch, and excessive patches, may require modification to the sampling frequency and location. If available, record the GPS coordinates of core.

Example:

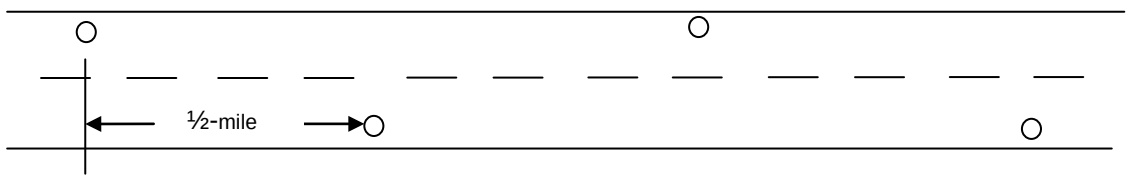

3 Sample Containment

3.1 Bag the cores with the bagging system provided by the Department's Helena Materials Bureau. If possible, bag the core in the orientation it was extracted (directly from drill barrel). Keep field notes describing the appearance, location, and total depth of the core. Take pictures to accompany field notes. If a portion or portions of the core are rubble, describe the thickness of the rubble section and where the rubble portion was within the core. Submit the sample for stripping evaluation. Also describe the roadway condition and any other information that would be helpful in evaluating the cores and the in-place pavement.

4 Sample Identification and Submitting of Samples

4.1 Mark core with specimen number using a marker or grease pencil. Each core sample bag must contain a tag including the Sample Record ID number and specimen number. Ensure the Sample Record contains the Sample ID number, specimen number, uniform project number (UPN), and project name if available, location (route number, station, mile post, lane, offset, and GPS), total depth drilled and total length of the core when bagged. Submit the cores to the Materials Bureau for evaluation. Include observations and comments in the Sample Record Remarks.

5 Evaluation of Cores

5.1 Evaluate the **total** core for stripping using the "control photographs" in Annex A. Split cores by indirect tensile loading in a press and record maximum pressure needed to yield the core. Evaluate each lift or distinct layer of plant mix for stripping using the Core Rating Scale (Section 5.2).

5.2 Core Rating Scale

Core Rating	Description
4 (good core)	Face shiny, black, all aggregate particles coated
3 (moisture damaged)	Loss of sheen, dull appearance, some smaller aggregate is uncoated
2 (stripping)	In addition to moisture damage some large aggregate is not coated
1 (severely stripped)	Most of the aggregate is so clean the colors of the rock are easily seen
0 (no core)	Asphalt is mostly gone from all sizes of aggregate. The core has disintegrated.

6 Reporting Results

6.1 At the completion of the evaluation, test results consisting of the extent of stripping, and other test information are entered into SiteManager by the Materials Bureau. Each lift or layer is evaluated for stripping in the report.

ANNEX: Examples of Evaluated Cores

A1

GOOD CORE (4)
SHINY, BLACK
ALL AGGREGATE PARTICLES
ARE COATED

A2

MOISTURE DAMAGED (3)
LOSS OF SHEEN, DULL APPEARANCE
SOME SMALLER AGGREGATE (-10 M)
IS UNCOATED

A3

STRIPPING (2)
IN ADDITION TO MOISTURE
DAMAGE SOME LARGE AGGREGATE
IS NOT COATED

A4

SEVERLY STRIPPED (1)
MOST OF THE AGGREGATE IS
SO CLEAN THE COLORS OF THE
ROCKS ARE EASILY SEEN

A5

RUBBLE (NO CORE) (0)
ASPHALT IS MOSTLY GONE
FROM ALL SIZES OF AGGREGATE

METHOD OF SAMPLING AND TESTING
MT 332-14
GYRATORY COMPACTION OF BITUMINOUS MIXTURES
(*Montana Method)*

1 Scope

1.1 This test method describes the procedure for verification of asphalt content and mixture properties of bituminous mixtures by the compaction of cylindrical specimens of Plant Mix Surfacing (PMS) using the Superpave gyratory compactor. The density of bituminous mixtures is determined directly for N_{des}.

1.2 Establish appropriate safety and health practices and determine the applicability of regulatory limitations prior to use.

1.3 This test method describes the procedure for placing a sample into a 150 mm diameter mold for an apparatus that compacts bituminous mixture using a combination of pressure and gyration. The apparatus measures the specimen height very precisely as compaction occurs after each gyration. The required compaction effort is defined from tables found in the specifications. This procedure shows how closely the bituminous mixture being produced is to the production requirements.

2 Referenced Documents

AASHTO

T 312 Preparing and Determining the Density of the Hot Mix Asphalt (HMA) Specimens by Means of the Superpave Gyratory Compactor
M 231 Weighing Devices Used in the Testing of Materials
T 344 Evaluation of Superpave Gyratory Compactor (SGC) Internal Angle Using Simulated Loading

MT Materials Manual
MT 314 Bulk Specific Gravity of Compacted Bituminous Mixtures
MT 319 Determining the Asphalt Binder Concrete of Plant Mix Surfacing (PMS) by the Ignition Method
MT 320 Mechanical Analysis of Aggregate Recovered from Ignition Oven Burn
MT 321 Determining Theoretical Maximum Specific Gravity of Bituminous Paving Mixtures – “Rice Gravity”

3 Significance and Use

3.1 Use this standard to prepare specimens for determining the mechanical and volumetric properties of PMS. The specimens simulate the density, aggregate orientation, and structural characteristics obtained in the actual roadway when proper construction procedures are used in the placement of the PMS.

4 Apparatus

Ensure equipment used meets the following requirements:

4.1 *Superpave Gyratory Compactor* - An electrohydraulic or electromechanical compactor with a ram and ram heads as described in Section 5.3 that are restrained from revolving during compaction. The axis of the ram is perpendicular to the platen of the compactor. The ram applies and maintains a pressure of 600 ± 18 kPa perpendicular to the cylindrical axis of the specimen during compaction. The compactor tilts specimen molds at an average internal angle of 1.16 ± 0.02 degrees, in accordance with AASHTO T 344. The equipment gyrates specimen molds at a rate of 30.0 ± 0.5 gyrations per minute throughout compaction.

4.1.1 *Specimen Height Measurement and Recording Device* - When specimen density is to be monitored during compaction, the Superpave Gyratory Compactor is equipped with means to continuously measure and record the height of the specimen to the nearest 0.1 mm during compaction; once per gyration.

4.1.2 The system may include a connected printer capable of printing test information, such as specimen height per gyration. In addition to a printer, the system may include a computer and suitable software for data acquisition and reporting.

4.2 *Specimen Molds* - Specimen molds have steel walls that are at least 7.5 mm thick hardened to a minimum Rockwell hardness of C48. The inside of the molds are smooth (Note 1). Ensure molds have an inside diameter of 149.90 to 150.20 mm and are at least 250 mm high at room temperature.

4.3 *Ram Heads and End Plates* - Ram heads and end plates are fabricated from steel with a minimum Rockwell hardness of C48. The ram heads stay perpendicular to its axis. The platen side of each end plate is flat and parallel to its face. Ensure all ram and end plate faces (the sides presented to the specimen) are flat to meet smoothness requirements in 4.2 (Note 1) and have a diameter of 149.50 to 149.75 mm.

Note 1 – Smooth is measured in accordance with ANSI B46.1 with rms value of 1.60 µm or less.

4.4 *Thermometers* - Armored, glass, digital probe or dial-type thermometers with metal stems for determining temperature of aggregates, binder and PMS between 10ºC to 232ºC.

4.5 *Balance* - a balance meeting the requirements of AASHTO M 231, Class G5, for determining the mass of aggregates, binder and PMS.

4.6 *Oven* - An oven, thermostatically controlled to ±3ºC, for heating aggregates, binder, PMS and equipment as required. Ensure the oven is capable of maintaining the compaction temperature range.

4.7 *Miscellaneous* - Flat bottom metal pans of at least 500 square inches that are square or rectangular for heating plant mix. Ensure pans will accommodate quartering. Scoop to remove mixture quarters for testing. Large spatula for turning and mixing sample prior to quartering. Insulated gloves, a lab apron or coat and other safety equipment as necessary. Lubricating materials recommended by compactor manufacturer and assorted cloth and paper rags for wiping molds and other surfaces. A Gyro Loader (a trough) is optional for adding samples to the mold.

5 Standardization

5.1 Items requiring periodic verification of calibration include the ram pressure, the angle of gyration, the gyration frequency, the LVDT (or other means used to continuously record the specimen height) and oven temperature. Verification of the mold and platen dimensions and the inside finish of the mold are also required. When the computer and software options are used, periodically verify the data processing system output using a procedure designed for such purposes. Verification of calibration, system standardization and quality checks may be performed by the manufacturer, other agencies providing such services, or in-house personnel. **Ensure verification is current in accordance with manufacturer's recommendations.**

5.2 The angle of gyration refers to the internal angle (tilt of the mold with respect to end plate surface within the gyratory mold). Verify the calibration of the internal angle of gyration in accordance with AASHTO T 344.

6 Materials

6.1 Obtain a sufficient quantity of PMS in accordance with MT 303 and MT 601.

7 Preparation of Apparatus

7.1 Turn on the main power for the compactor for the manufacturer's required warm-up period.

7.2 Verify machine settings are correct for angle, pressure and number of gyrations.

Note 2 – The required number of gyrations are shown in the contract.

7.3 Lubricate any bearing surfaces as needed per the manufacturer's instructions.

7.4 When specimen height is to be monitored, the following additional item of preparation is required. Immediately prior to the time when the PMS is ready for placement in the mold, turn on the device for measuring and recording the height of the specimen, and verify the readout is in the proper units (mm), and the recording device is ready. Prepare the computer, if used, to record the height data, and enter the header information for the specimen.

8 Asphalt Specimen Fabrication

8.1 Adjust the target specimen mass to result in a final compacted specimen having dimensions of 150 mm in diameter and 115 ± 5 mm in height at the designed number of gyrations based on volumetric properties. PMS that is brought to the test location and is still within the compaction temperature range may be batched for immediate testing. Bring loose PMS below the compaction temperature range to the compaction temperature range by careful uniform heating in an oven immediately prior to molding. Heating proceeds more quickly if the sample is placed in a clean (buttered) flat bottomed pan. Loose PMS that is within the compaction temperature range should not be reheated.

Note 3 – Ensure specimens are fabricated to maintain a consistent height throughout production to provide satisfactory test results.

9 Compaction Procedure

9.1 Place a compaction mold and end plates in an oven at the required compaction temperature to pre-heat the mold and end plates to compaction temperature prior to the estimated beginning of the compaction cycle. When the bituminous mixture is within the compaction temperature range, remove the heated mold and end plate from the oven and place a paper disc in the bottom of the mold.

Note 4 – Compact test specimens at a consistent temperature based on the compaction temperature range in the mix design.

9.2 Center the mold under the loading ram. Rotate the mold clockwise to the stop, and lock the head down.

9.3 Pour the pre-weighed quantity of bituminous mixture into the mold in one lift. Use a gyro loader to facilitate this operation. If you do not have a gyro loader, another method that works is to pour the sample from a paper bag. The bag acts as a container and a funnel when filling the mold. Care should be taken to avoid segregation. Introduce the sample into the mold in a continuous motion to avoid segregation. Level the mix with the stroke of a spatula (if necessary) and place another paper disk on top of the leveled material. Insert the top end plate with the bevel up.

9.4 Start the load compaction cycle. The machine will lower the ram until the pressure on the specimen reaches 600 kPa ± 18 kPa, apply a 1.16 ± 0.02º average internal angle to the mold assembly and begin the gyratory compaction. Allow the compaction to proceed until the desired number of gyrations is reached and the ram retracts. Record the specimen height at N_{des}. A printed record may be produced as the compactor operates. Extrude the specimen from the mold. Remove the mold from the compactor.

Note 5 – Normally, extrude the specimens from the mold immediately. For lean, rich or tender mixtures, cool 5 to 10 minutes before extruding the specimen to avoid specimen collapsing.

9.5 Immediately remove the paper discs from the top and bottom of the hot specimen. Write the specimen number on the specimen and the gyration worksheet. Cool the specimens by a fan or air conditioner. Handle specimens carefully. Hot specimens are very tender and fragile.

Note 6 – Before reusing the mold, clean thoroughly, place in an oven, and reheat to compaction target temperature. The use of multiple molds will speed up the compaction process.

10 Density Procedure

10.1 Determine the maximum specific gravity (G_{mm}) of the loose mix in accordance with MT 321 using a companion sample. Condition the companion sample to the same extent as the compaction sample.

10.2 Determine and record the mass of the extruded specimen to the nearest 0.1 gram and determine the bulk specific gravity (G_{mb}) of the extruded specimen in accordance with MT 314. This is the bulk gravity of the specimen at N_{des}. Measure the bulk density of the compacted bituminous mixture after the specimen has cooled sufficiently (to near room temperature) in accordance with MT 314.

11 Calculations

<u>% Air Voids</u> (V_a)

$$V_a = 100 \times \left(\frac{G_{mm} - G_{mb}}{G_{mm}}\right)$$

Where:
G_{mm} = *Maximum specific gravity of paving mixture (Rice)*
G_{mb} = *Bulk specific gravity of compacted mixture*

Record and round to the nearest 0.1%

<u>Voids in the Mineral Aggregate</u> (VMA)

$$VMA = 100 - \left(\frac{G_{mb}(100 - P_s)}{G_{sb}}\right)$$

Where:
G_{mb} = *Bulk specific gravity of compacted mixture*
P_s = *Aggregate content, percent by total mass of mixture*
G_{sb} = *Bulk specific gravity of aggregate*

Record and round to the nearest 0.1%

<u>Voids Filled with Asphalt</u> (VFA)

$$VFA = 100 \times \left(\frac{VMA - V_a}{VMA}\right)$$

Record and round to the nearest 0.1%

Dust/Asphalt Ratio

$$DA = \left(\frac{P_{200} - 1}{P_b}\right)$$

Where:
DA = Dust to Asphalt Ratio,
P_{200} = Aggregate content passing the 0.075mm sieve, the percent by mass of aggregate (MT 320)
P_b = Asphalt Content, percent by total mass of mixture (MT 319)

Record and round to the nearest 0.1%

Note 7 – The Dust/Asphalt ratio is used during mix design and field production.

Dust Proportion

$$DP = \left(\frac{P_{200} - 1}{P_{be}}\right)$$

Where:
DP= Dust Proportion,
P_{200} = Aggregate content passing the 0.075mm sieve, the percent by mass of aggregate (MT 320)
P_{be} = Effective asphalt content, percent by total mass of mixture

Note 8 – The Dust Proportion is used during mix design.

Effective Asphalt Content

$$P_{be} = -(P_s \times G_b) \times \left(\frac{G_{se} - G_{sb}}{G_{se} \times G_{sb}}\right) + P_b$$

Where:
P_{be} = Effective asphalt content, percent by total mass of mixture
P_s = Aggregate content, percent by total mass of mixture
G_b = Specific gravity of asphalt
G_{se} = Effective specific gravity of aggregate
G_{sb} = Bulk specific gravity of aggregate
P_b = Asphalt Content, percent by total mass of mixture

Record and round to the nearest 0.1%.

12 Report

12.1 Record pertinent information in the QA Suite Plant Mix section.

13 Forms

13.1 **Gyratory Data Entry Form**

METHODS OF SAMPLING AND TESTING
MT 333-04
METHOD OF TEST FOR THE TORSIONAL RECOVERY OF LATEX MODIFIED ASPHALT EMULSION RESIDUE

1 Scope

1.1 This test method provides an indication of the amount of elasticity that has been imparted to asphalt by the addition of latex. The asphalt used in this test has been recovered from an emulsion.

2 Apparatus

2.1 *Sample container* – A flat-bottomed, cylindrical, seamless tin 55mm (2.17 inch) in diameter and 35 mm (1.38 inch) in depth. The container is commonly known as a 3-ounce ointment tin.

2.2 *Disc and spider assembly* – This assembly is shown in Figure 1. The disc is made of aluminum. The spider assembly, bolt, and pointer are made of steel.

2.3 *Wrench* – A 9/16 inch open-end or box wrench.

2.4 *Timer* – A stopwatch, clock, or other timing device graduated in divisions of one second or less.

2.5 *Scale* – A paper scale, graduated in millimeters, at least 180 mm in length.

3 Procedure

3.1 Place the spider assembly on the container and adjust it so that it is centered, using the small nuts on the arms of the spider to maintain the adjustment. Adjust the depth of the disc in the container so that the top of the disc will not be below the surface of the asphalt. Remove the spider assembly from the container. Construct two, centered spider assemblies and containers per test.

3.2 Obtain a latex modified asphalt residue sample by following the procedure outlined in AASHTO T 59, Residue By Evaporation, sections 21 – 27.

3.3 Transfer a sufficient quantity of the hot residue into the sample container to fill it to within ½ to ¼ inch from the top of the container. Immediately place the previously centered spider assembly on the container and adjust the depth of the disc to bring the top of the disc level with the surface of the asphalt.

3.4 Place the two test assemblies in a 138°C (280°F) oven for ten minutes to allow air bubbles to escape and the break the surface tension around the disc. Remove the assembly from the oven and allow cooling to room temperature for two hours.

3.5 Tape a paper scale around the container and mark the location of the pointer. Make another mark 180° form the pointer (halfway around the container).

3.6 Holding the container and spider assembly rigidly, place the wrench on the bolt head and turn the bolt to the 180° reference mark and release immediately. The rotation should be done at a steady rate and be accomplished in approximately 5 seconds. Start the stopwatch when the bolt is released. Mark the location of the pointer on the scale when 30 seconds have elapsed, and again when 30 minutes have elapsed. Repeat the procedure with the second test assembly.

4 Calculation and Report

4.1 The percent of recovery following deformation is calculated as follows:

Percent Recovery = 100[A/(B/2)]

where:

A = The arc on the container, measured in millimeters, between the mark made after 30 seconds has elapsed, and the mark made after 30 minutes has elapsed.

B = The circumference of the can, measured in millimeters.

4.2 Report the percent recovery as an average of the two tests.

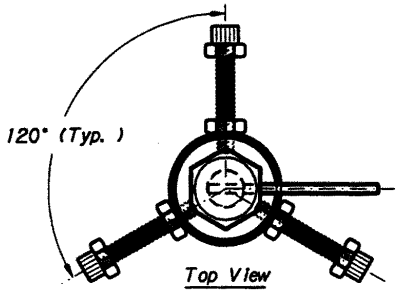

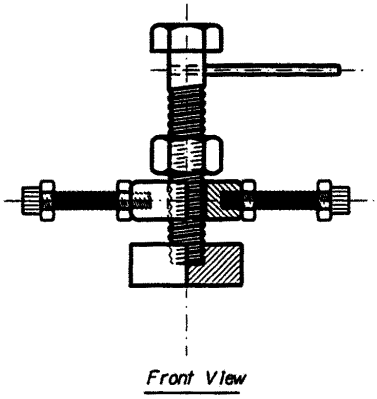

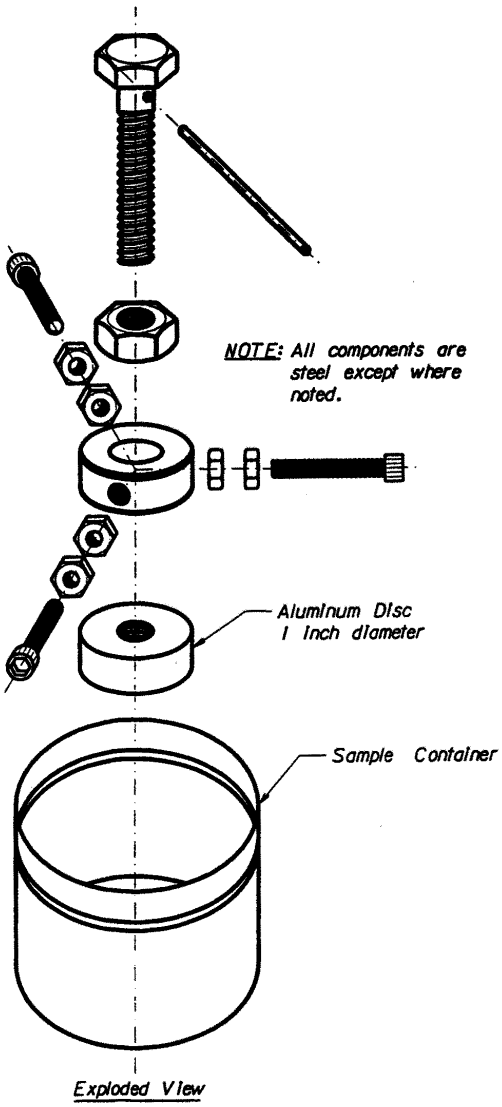

SPIDER ASSEMBLY

Scale ~ N. T. S.

MONTANA DEPARTMENT OF TRANSPORTATION

FILENAME: Material.dgn | 5-3-00 | D.G.C.

METHOD OF SAMPLING AND TESTING
MT 334-14
HAMBURG WHEEL-TRACK TESTING OF COMPACTED BITUMINOUS MIXTURES
(*Modified AASHTO T 324*)

1 Scope

1.1 This test method describes a procedure for testing the rutting and moisture-susceptibility of plant mix surfacing (PMS) samples in the Hamburg Wheel-Track Testing Device.

1.2 The method describes the testing of submerged, compacted PMS in a reciprocating rolling-wheel device. This test provides information about the rate of permanent deformation from a moving, concentrated load. This procedure utilizes laboratory compacted specimens or field cores.

1.3 The test method is used to determine the premature failure susceptibility of PMS due to weakness in the aggregate structure, inadequate binder stiffness, or moisture damage. This test method measures the rut depth and number of passes to failure.

1.4 The potential for moisture damage effects are evaluated because the specimens are submerged in temperature-controlled water during loading.

2 Reference Documents

AASHTO
T 324 Hamburg Wheel-Track Testing of Compacted Hot Mix Asphalt (HMA)

MT Materials Manual
MT 303 Sampling Bituminous Paving Mixtures
MT 314 Bulk Specific Gravity of Compacted Bituminous Mixtures
MT 321 Determining Theoretical Maximum Specific Gravity of Bituminous Paving Mixtures – “Rice Gravity”
MT 332 Gyratory Compaction of Bituminous Mixtures
MT 335 Linear Kneading Compaction of Plant Mix Surfacing (PMS)

Manufacturer’s Operation Manual
For equipment used

3 Summary of Method

3.1 A laboratory-compacted specimen of PMS, a saw-cut slab specimen, or a core taken from a compacted pavement is repetitively loaded using a reciprocating steel wheel. The specimen is submerged in a temperature-controlled water bath at a temperature specified for the binder being used. The deformation of the specimen, caused by the wheel loading, is measured.

3.2 The impression is plotted as a function of the number of wheel passes. An abrupt increase in the rate of deformation coincides with stripping of the asphalt binder from the aggregate in the PMS specimen.

4 Apparatus

Ensure equipment used meets the following requirements:

4.1 *Hamburg Wheel-Track Testing Device* - Electrically powered device capable of moving a steel wheel with a diameter of 203.6 mm and width of 47 mm over a test specimen. The load applied by the wheel is 705 N. The wheel load is maintained at + 5% for the duration of the test excluding the cycles that are interrupted by stopping the process. The wheel reciprocates over the specimen, with the position varying sinusoidally over time. The wheel makes 52 +2 passes across the specimen per minute.

4.2 *Temperature Control System* - Water bath capable of controlling the temperature within + 2.0ºC over a range of 25 to 70ºC. This bath has a mechanical circulating system to stabilize the water temperature.

4.3 *Impression Measurement System* - Linear Variable Differential Transducer (LVDT) device capable of measuring the depth of the impression of the wheel within 0.5 mm, over a range of at least 0 to 20 mm. The system is mounted to measure the depth of the impression at several points, including the midpoint, in the wheel's path on the specimen. The impression is measured at least every 400 passes of the wheel without stopping the wheel.

4.4 *Wheel Pass Counter* - Device that counts each wheel pass over the specimen. The signal from this counter is coupled to the wheel impression measurement, allowing for the depth to be correlated with the number of wheel passes.

4.5 *Sample Mounting System* - Tray is mounted to the machine so that movement of the specimen is restricted to less than 0.5 mm during testing. The system supports the specimen, allowing for free circulation of water in the bath on all sides of the specimen and tray.

4.6 *Balance* – Balance with a minimum capacity of 15,000 grams, accurate to 0.1 g.

4.7 *Oven* - Forced draft or convection oven.

4.8 *Mixing apparatus* – Bowls, spoon, spatula, etc.

4.9 *Diamond Bladed Saw* – Capable of cutting PMS.

5 Specimen Preparation

5.1 Slabs – Compact and prepare PMS into slabs in accordance with MT 335. Slab thicknesses within a range of 38 to 100 mm can be used. Ensure the slab thickness is at least twice maximum aggregate size.

5.1.1 The formula for the volume of a slab is as follows: length x width x thickness. The amount of material to batch for each slab with 7% + 1% air voids is determined by multiplying the sample length x width x thickness in cubic centimeters by the sample's maximum specific gravity (Gmm) x 0.93. Mass for sample = sample volume x 1 gm/cm3 x Gmm x 0.93

5.2 Gyratory Specimens – Two gyratory specimens produced to the same requirements are cut to height, paired, and tested or a single specimen may be cut in half to yield two specimens. Each sample is cut on a chord that is 35 to 45 mm longer than the width of the test wheel and parallel to the vertical axis of the specimen. The two specimens are mounted so that the chords are together and the wheel rolls on the uncut faces of the specimens (see Note 1). The wheel path follows the diameter of each half of the sample through the center of the chords. A tolerance of + 5 mm offset from the center is allowed. Using a diamond saw, cut two specimens the same height.

Note 1 – Take care when loading the sample so it is level to the surface of the mold. Trim the sample if it is too tall or shim it up if it is too short (support with plaster if needed).

5.3 Ten Inch Cores – Use a nominal 10-inch diameter bit to cut field cores. Complete the preparation of the cores for testing by removing the bottom lift(s) of PMS to achieve the desired height between 38 to 100 mm. Cut the core with a diamond saw at the desired point, taking care to orient the cut parallel to the surface being tested.

5.4 Laboratory Produced Mix – Before mixing bituminous mixtures for testing, "butter" all of the pans and implements. Heat materials to the mixing temperature range in a forced draft or convection oven. Do not overheat the samples.

6 Procedure

6.1 Position the frame holding the sample into the wheel-tracker so that the loading arm of the wheel is approximately horizontal when it rests on the slab. Ensure that the frame is securely fastened. Confirm that the settings of the machine are the same as those required for the specification. These settings include wheel force, water temperature (see note 2), stroke length, speed and any other variables described in the procedure. Enter the number of test passes required by the specification.

Note 2 – Test the PG binder in accordance with the chart below:

GRADE	TEST TEMPERATURE
70 - 28	133°F (56°C)
64-22 and 64 - 28	122°F (50°C)
58 - 28	111°F (44°C)

6.2 Lower the wheel onto the slab. Select the “Start” button of the testing device software. When the specimen has been preconditioned in the water at the test temperature, for 30 minutes, ten passes with the loaded wheel occur. This establishes zero. The wheel-tracking device shuts off when the test completes the specified number of passes or when the test has achieved the maximum impression depth established in the specification. The testing device software automatically saves the test data file.

6.3 Raise the wheel(s) and photograph the tested specimen. Remove the specimen mounting tray(s) containing the specimen(s). Once specimen(s) have been removed, thoroughly clean the mounting tray(s). Clean the water bath, heating coils, wheels, filter element, spacers, and temperature probe in accordance with manufacturer’s recommendations. If no manufacturer’s recommendation exists, use water and scouring pads. Use a wet-dry vacuum to remove particles that have settled to the bottom of the baths. Lubricate moving parts after every test or in accordance with manufacturer’s recommendations. Do not use solvents to clean the water bath.

7 Report

7.1 Ensure the report for the results of testing samples using the wheel-tracking device contains the following information:

7.1.1 Cover Sheet:

Sample, Compaction, and Run Dates
Project Number
Project Name
Binder Content
Binder Grade
SiteManager Sample ID
Sample Type
Other Comments

7.1.2 Configuration Settings:

Conditioning Time
Velocity
Maximum Allowed Passes
Maximum Allowed Depth
Sample Frequency
Data Points
Wheel Travel

Acceleration
Water Temperature
Force Setting
Average Final Impression
Graph (number of passes on the x-axis and impression depth on the y-axis)

7.2 Report the Average Final Impression determined by the software as the Hamburg Wheel-Tracking Device test result. Determine the average impression of each run by averaging the middle seven points from the data given by the software (eliminating the first two data points and the last two data points). A Production test is considered a single specimen. A Mix Design Verification test is the average of two or more specimens. If two Mix Design Verification tests vary by more than 6mm with one passing test result and one failing test result, prepare two more test specimens and re-run. The reported result will be the average of all four or more individual specimen test results.

METHOD OF SAMPLING AND TESTING
MT 335-14
LINEAR KNEADING COMPACTION OF PLANT MIX SURFACING (PMS)

1 Scope

1.1 This test method is used to prepare compacted slabs of PMS for testing with the Hamburg Wheel-Track Testing Devices.

2 Reference Documents

MT Materials Manual
MT 303 Sampling Bituminous Paving Mixtures
MT 309 Splitting Samples of Plant Mix Surfacing to Testing Size
MT 314 Bulk Specific Gravity of Compacted Bituminous Mixtures
MT 321 Determining Theoretical Maximum Specific Gravity of Bituminous Paving Mixtures – "Rice Gravity"
MT 332 Gyratory Compaction of Bituminous Mixtures
MT 334 Hamburg Wheel-Track Testing of Compacted Bituminous Mixtures

Manufacturer's Operation Manual
For equipment used

3 Summary of Method

3.1 A slab of plant mix is compacted by applying pressure to the PMS through a series of rectangular parallel plates. The sample is placed in an open top steel box with the desired dimensions. Closely fitting steel plates are placed in a vertical row across the plant mix. A steel roller travels back and forth on the row of plates and successively applies pressure to the plant mix through the plates. This compacting motion continues until the height of the specimen of plant mix is reduced to the height calculated to yield the desired voids.

4 Apparatus

Ensure equipment used meets the following requirements:

4.1 *Linear Kneading Compactor* – Hydraulic powered unit, used to compact bituminous mixtures into rectangular slabs using vertically aligned steel plates that compress the bituminous mixture into a flat slab of predetermined thickness and density.

4.2 *Steel Wear Plate* – 10.125" wide, 12.6" long, 0.125" high

4.3 *Steel Compacting Plates* – 3.6" high

4.4 *Steel Compaction Carrier Box* – 10.25" wide, 12.625" long, 6" high

4.5 *Temperature Control System* – Oven which can maintain temperatures (250ºF to 350ºF).

4.6 *Shims* – Aluminum or steel plates that vary in thickness to achieve desired specimen height.

4.7 *Rubber Mallet*

4.8 *Balance* – Balance with a minimum capacity of 15,000 grams, accurate to 0.1 g.

5 Sample

5.1 *Field Specimens* – The top lift or lifts of PMS are tested. Ensure specimens for testing have a thickness at least two times the nominal maximum aggregate size.

5.1.1 *Slabs* –The formula for the volume of a slab is as follows: length x width x thickness. The amount of material to batch for each slab with 7 ± 1% air voids is determined by multiplying the specimen length x width x thickness in cubic centimeters by the specimen's maximum specific gravity (Gmm) x 0.93. Mass for sample = 5283 cm3 x 1 gm/cm3 x Gmm x 0.93

5.1.2 *Laboratory Produced Mix* – Before mixing bituminous mixtures for testing, "butter" all of the pans and implements. Heat materials to the mixing temperature range in a forced draft or convection oven. Do not overheat the specimens.

6 Procedure

6.1 Preheat wear and compaction plates in an oven to desired compaction temperature. Ensure PMS is heated to desired compaction temperature. If not, place in the oven to heat to compaction temperature.

6.2 Mix and reduce the sample in accordance with MT 309 to approximate sample sizes. Individually weigh enough material for each specimen.

6.3 Place the wear plate in compaction carrier box.

6.4 Load the specimen into compaction carrier box. Place the steel parallel plates vertically on top of the specimen mixture. To level plates on the specimen, use a rubber mallet if needed.

6.5 Ensure that all safety mechanisms are in place at Linear Kneading Compaction start-up in accordance with manufacturer's recommendations. Start the Linear Kneading Compactor.

6.5 Using a hydraulic jack, pressure will be applied automatically or manually to the specimen. Maintain a constant pressure until specimen reaches desired height. Ensure final compaction is 7 + 1% air voids.

6.6 Press the stop button to complete the compaction process. Shut off the Linear Kneading Compactor and disengage safety mechanisms. Remove steel plates and side walls. Remove slab along with the bottom plate and cool to room temperature (to the touch).

6.7 Repeat the procedure for any additional specimens.

7 Calculation

7.1 Using MT 314 and MT 321, calculate the air void content of the specimen to the nearest tenth of a percent.

% Air Voids (Va):

$$V_a = 100 \times \left(\frac{G_{mm} - G_{mb}}{G_{mm}}\right)$$

Where:
Gmm = Maximum specific gravity of paving mixture (Rice)
Gmb = Bulk specific gravity of compacted mixture

Round and record to the nearest 0.1%

METHODS OF SAMPLING AND TESTING
MT 337-10
METHOD OF TEST FOR SOIL STIFFNESS GAUGE

1 Scope

1.1 This method covers the in-place evaluation of the stiffness of base course material for use in roadways by means of electro-mechanical stiffness measurements.

2 Reference Documents

ASTM
D6758 Standard Test Method for Measuring Stiffness and Apparent Modulus of Soil and Soil-Aggregate In-Place by an Electro-Mechanical Device

MT Materials Manual
MT 212 Determination of Moisture and Density of In-Place Materials

Other
H-4140 – Test Method for Using the Humbolt GeoGauge as an In-Place Index of CBR

3 Terminology

3.1 *Stiffness* – the ratio of change of force to the corresponding change in translational deflection of an elastic element.

3.2 *Young's modulus* – the ratio of the increase in stress on a test specimen to the resulting increase in strain under constant traverse stress limited to materials having a linear stress-strain relationship over a range of loading, also called elastic modulus.

3.3 *Poisson's ratio* – the ratio between linear strain changes perpendicular to and in the direction of a given uniaxial stress change.

3.4 *Foot* – the part of the gauge which contacts the ground and imparts force to it.

3.5 *Footprint* – the annular ring imprint left on the ground by the foot of the gauge.

3.6 *Non-destructive testing* – a condition that does not impair future usefulness and serviceability of a layer of soil or soil-aggregate mixture in order to measure, evaluate or assess its physical properties.

3.7 *Seating the foot* – the process of placing the gauge on the ground such that the desired footprint is achieved.

3.8 *Site* – the general area where measurements are to be made.

3.9 *Test location* – a specific location on the ground where a measurement is made.

3.10 *Shear modulus* (G)

$$G = \frac{E}{2(1+v)} \qquad (1)$$

Where:
G = shear modulus, kpsi (MPa),
E = Young's modulus, kpsi (MPa),
v = Poisson's ratio

4 Significance

4.1 This test method is suitable for the in-place determination of a Young's and a shear modulus of soil and soil-aggregate mixtures (3, 4). Stiffness, as measured by this method, is related to modulus (5) from an assumption of Poisson's ratio and from the radius of the foot of the gauge as follows:

$$Kgr \approx \frac{1.77RE}{(1-v^{2)}} \approx \frac{3.54RG}{(1-v)} \qquad (2)$$

Where:
Kgr = stiffness of the ground layer being measured, klbf/in (MN/m),
R = outside radius of the gauge' foot, in (m),
v = Poisson's ratio,
E = Young's modulus, kpsi (MPa),
G = shear modulus, kpsi (MPa).

5 Gauge

5.1 Stiffness gauge – an electro-mechanical instrument capable of being seated on the surface of the material under test and which provides a meaningful and measureable stress level and a means of determining force and displacement.

5.2 *Seating sand* – a supply of moist, clean, fine sand passing a No. 30 (600µm) sieve that is sufficiently moist to clump in the palm of the hand. This is used to assist the seating of the rigid foot on hard and rough surfaces or at anytime when additional assistance in seating is required.

5.3 *Principle of Operation* - The force applied by the shaker and transferred to the ground is measured and calculated by differential displacement across the internal flexible plate as follows:

$$Fdr = Kflex(X2 - X1) + \omega\, 2mintX1 \qquad (3)$$

Where:
Fdr = force applied by the shaker, lbf (N),
Kflex = stiffness of the flexible plate, klbf/in (MN/m),
X2 = displacement at the flexible plate, in. (m),
X1 = displacement at the rigid foot, in. (m),
$\omega = 2\pi f$, where f is frequency, Hz, and,
mint = mass of the internal components attached to the rigid foot and the foot itself, lb (kg).

At the frequencies of operation, the ground-input impedance is dominantly stiffness controlled.

$$Kgr = \frac{F_{dr}}{X_1} \qquad (4)$$

Where:
Kgr = stiffness of the ground layer being measured, klbf/in (MN/m).

By substituting Eq 3 for Fdr in Eq 4, averaging over the operating frequencies and substituting velocity, V, for displacement, X, since the units cancel each other, the ground stiffness is calculated as follows:

$$\text{Kgr} = \text{Kflex} \quad \frac{\sum_1^n \left(\frac{X_2 - X_1}{X_1} \right)}{n} + \frac{\sum_1^n \omega^2}{n} m_{\text{int}} = K_{flex} \frac{\sum_1^n \left(\frac{V_2 - V_1}{V_1} \right)}{n} + \frac{\sum \frac{n}{1} \omega^2}{n} m_{\text{int}} \qquad (5)$$

Where:
n = number of test frequencies used in the gauge,
V2 = velocity at the flexible plate, ft/s (m/s),
V1 = velocity at the rigid foot, ft/s (m/s).

6 Calibration / Equipment Verification

6.1 Follow the recommendation of the gauge manufacturer.

6.2 Field check the calibration whenever any stiffness measurement is in doubt.

Note 1 – Field conditions may not allow the precision of a laboratory calibration and so an appropriate tolerance should be assigned to the field check (for example, ± 5% relative to the value of the stiffness expected).

7 Procedure

7.1 <u>Stiffness measurement</u>

7.1.1 Ensure that the foot is clean and free of soil or other debris.

7.1.2 Turn on the gauge.

7.1.3 Prepare the surface. Lightly brush any loose material away from the test location before seating the foot. If the test location requires leveling, scrape the surface with a square point shovel or with the template provide with the gauge. The surface does not need to be leveled if the gauge can stand on its own.

7.1.4 Lay the template onto the surface being tested and apply a layer of seating sand (1/8 to 1/4 inch thick).(Note 2) Pat down firmly, strike off the sand with a straightedge, place the gauge on top of the sand and rotate 1/4 turn to seat.(Note 3) Ensure that the gauge does not contact any portion of the template.

Note 2 – Use moist or wet, clean and uniform local fines (minus 30 mesh) or commercially available mortar sand for seating the gauge. The moist or wet condition is for cohesiveness of the sand. Dry sand and other cohesionless materials will serve to decouple the gauge from the ground.

Note 3 – Do not apply additional pressure to the gauge when seating and rotating. Follow the manufacturer's recommendation as appropriate.

7.1.5 At least 60% of the foot's annular ring surface must seat or contact the ground to provide consistent stress on the ground for each measurement. Visibly estimate the amount of surface contact from the footprint left by the foot by lifting the gauge off the ground after the measurement is taken. Reseat the gauge and run test again if it is determined that less than 60% of the annular ring made contact with the ground.

7.1.6 Ensure that the external case of the gauge does not come into contact with a trench wall, pipe or any other object.

7.1.7 Take the measurement. (Press “Meas” button. SSG will measure site noise and stiffness as a function of frequency. The gauge will display average stiffness, lb/in (MN/m) or modulus, psi (MPa) or percentage of target. If construction noise is present, try to take the test at a distance greater than 25 yards from the operating equipment.) Take a minimum of three measurements and report the average.

7.1.8 Remove the gauge from the test location and inspect the footprint. If contact is not adequate, repeat the measurement.

8 Report

8.1 The make, model and serial number of the gauge used.

8.2 Name of the operator.

8.3 Project name and number.

8.4 Test locations and average stiffness value rounded to the whole number.

8.5 Moisture content to 0.1 %.

Form 337 STAB
Revised 12-30-2009

Type of Surfacing: _____

Summary Sheet No. _____

Pit Lab No.: _____

Montana Department of Transportation
CAC Surfacing Stiffness – Summary of Test Data

Soil Stability Gauge No. _____

Make & Model SSG _____

Nuclear Device No. _____

Project No.: _____ Project Name: _____ Tested by: _____

Roadway Section No.	Lane and Station of Roadway Section	Lift _____of _____	Proctor Results		Average of Tests on this Section		% of Control Density	+ or – Control Moisture	Stiffness Value	Cure Time Hours/Days	Remarks
		Moisture	Dry Density	Moisture	Dry Density						

Avg. Moisture Value:_____ **Avg. Stiffness Value:_____**

Approved by EPM _____ Checked by District Materials Supervisor _____

REMARKS:_____

_____

_____ Materials Bureau-Helena

_____ Construction Bureau

METHODS OF SAMPLING AND TESTING
MT 338-10
DRAINDOWN CHARACTERISTICS IN UNCOMPACTED ASPHALT MIXTURES
(*Modified ASTM D6390*)

1 Scope

1.1 This method covers the determination of the amount of draindown in an uncompacted asphalt mixture sample when the sample is held at elevated temperatures comparable to those encountered during the production, storage, transport, and placement of the mixture.

2 Referenced Documents

ASTM
D6390 Determination of Draindown Characteristics in Uncompacted Asphalt Mixtures

MT Materials Manual
MT 303 Sampling Bituminous Paving Mixtures
MT 306 Marshall Method for Bituminous Mix Design

3 Terminology

3.1 *Draindown* – draindown is considered to be that portion of material which separates itself from the sample as a whole and is deposited outside the wire basket during the test. The material which drains may be composed of either asphalt binder or a combination of asphalt binder, additives, or fine aggregate.

4 Summary of Test Method

4.1 A sample of the asphalt mixture to be tested is prepared in the laboratory or obtained from field production. The sample is placed in a wire basket which is positioned on a plate or other suitable container of known mass. The sample, basket, and plate or container is placed in a forced draft oven for one hour at a pre-selected temperature. At the end of one hour, the basket containing the sample or container is removed from the oven along with the plate or container and the mass of the plate or container containing the drained material, if any, is determined. The percent of draindown is then calculated.

5 Significance and Use

5.1 This test method can be used to determine whether the amount of draindown measured for a given asphalt mixture is within specified acceptable levels. The test provides an evaluation of the draindown potential of an asphalt mixture during mixture design and/or during field production. This test is primarily used for mixtures with high coarse aggregate content such as porous asphalt (open graded friction coarse) and stone matrix asphalt (SMA).

6 Apparatus

6.1 *Forced Draft Oven* – capable of maintaining a set temperature in a range from 120°C to 175°C to within ± 2°C.

6.2 *Plates* - or other suitable containers of appropriate size. The plates or containers used shall be of appropriate durability to withstand the oven temperatures. Cake pans or pie tins are examples of suitable types of containers.

6.3 *Standard basket* – A basket constructed of standard 1/4 inch sieve cloth, 4 1/4 ± 3/8 inches in diameter, 5 1/2 ± 3/8 inches in height with a wire sieve cloth bottom installed inside the basket 1 ± 1/4 inches from the bottom of the basket.

6.4 *Balance* – A balance accurate to 0.1 g.

7 Sample Preparation

7.1 Laboratory Prepared Samples

7.1.1 Number of Samples –Determine the draindown characteristics for each mixture tested at two different temperatures. The temperatures shall be the anticipated plant production temperature as well as 10°C above (see Note 1). Test duplicate samples for each temperature. Thus for one asphalt mixture, a minimum of four samples will be tested.

Note 1 – When using the test as part of the mixture design procedure, the test should be performed at two temperatures in order to determine the potential effect that plant temperature variation may have on the mixture during production. When the test is used in the field during production, it should be necessary to perform the test at the plant production temperature only.

7.1.2 Dry the aggregate to a constant mass and sieve it into appropriate size fractions as indicated in MT 306.

7.1.3 Determine the anticipated plant production temperature for the specific mix to be tested based on the specifications, mix design, or recommendations of the binder supplier.

7.1.4 Place the amount of each size fraction required to produce completed mixture samples of 1200 ± 200 g into separate pans. Combine the aggregate fractions to produce the same gradation as the job-mix formula. Place the aggregate samples in an oven and heat to a temperature not to exceed the temperatures established in 7.1.1.

7.1.5 Heat the asphalt binder to the temperatures established in 7.1.1.

7.1.6 Place the heated aggregate in the mixing bowl. Add any stabilizers (see Note 2) and thoroughly mix the dry components. Form a crater in the aggregate blend and add the required amount of asphalt binder. Add the asphalt binder so that the final sample has the same asphalt content as the job-mix formula. At this point, the temperature of the aggregate and asphalt binder shall be at the temperature determined in 7.1.1. Mix the aggregate (and stabilizer if any) and asphalt binder quickly until the aggregate is thoroughly coated.

Note 2 – Some types of stabilizers such as fiber or some polymers are added directly to the aggregate prior to mixing with the asphalt binder. Other types of stabilizers are added directly to the asphalt binder prior to blending with the aggregate.

7.2 Plant Produced Samples

7.2.1 Number of samples – Test triplicate samples at the plant production temperature.

7.2.2 Obtain the samples in accordance with MT 303 during plant production by sampling the mixture at any appropriate location prior to the mixture leaving the plant. Reduce the samples obtained during actual production to the proper test size.

8 Procedure

8.1 Weigh the empty wire basket described in Section 6.3 and designate as A. Transfer the uncompacted mixture sample to the wire basket as soon as possible. Place the entire sample into the basket. Do not consolidate or otherwise disturb the sample after transfer to the basket. Determine the mass of the sample and the basket and designate as B.

8.2 Determine and record the mass of a plate or other suitable container to the nearest 0.1 g at ambient temperature and designate as C. Place the basket on the plate or container and place the assembly into the oven at a temperature as determined in 7.1.1 or 7.2.1 for 1 hr ± 5 min.

8.3 After the sample has been in the oven for 1 hr ± 5 min, remove the basket and the plate or container from the oven and cool to room temperature. Determine and record the mass of the plate or container plus the drained material to the nearest 0.1g and designate as D.

9 Calculation

9.1 Calculate the percent of mixture which drained to the nearest 0.1% as follows:

Draindown % = (D - C) / (B - A) x 100

Where:
A = mass of empty wire basket,
B = mass of wire basket and sample,
C = mass of empty catch plate or container, and
D = mass of catch plate or container plus drained material.

10 Report

10.1 Report the average percent of draindown at each of the test temperatures to the nearest 0.1%.

ASPHALT DRAINDOWN WORKSHEET

Project Number _____

Project Name _____

Tester Name _____ **Date** __

Plant Production Temperature _____

Laboratory Prepared Samples
(minimum of 4 samples tested)

	D	*C*	*B*	*A*	
Sample # 1	_____	- _____	÷ __	- _____	x 100 = _____
Sample # 2	_____	- _____	÷ __	- _____	x 100 = _____
					Average = _____
Sample # 3	_____	- _____	÷ __	- _____	x 100 = _____
Sample # 4	_____	- _____	÷ __	- _____	x 100 = _____
					Average = _____

Plant Produced Samples
(minimum of 3 samples tested)

	D	*C*	*B*	*A*	
Sample # 1	_____	- _____	÷ __	- _____	x 100 = _____
Sample # 2	_____	- _____	÷ __	- _____	x 100 = _____
Sample # 3	_____	- _____	÷ __	- _____	x 100 = _____
					Average = _____

Comments:

CURRENT DATE OF REVISION
MT 400 SECTION
MISCELLANEOUS MATERIALS AND TEST METHODS

Test Method No.	Title	Pages	Date of Publication or Revision
MT 401	Sampling and Inspecting Corrugated Aluminum Pipe	pp 1-2	May 2007
MT 402	Sampling and Testing Corrugated Steel Pipe	pp 1-2	Jun 2004
MT 403	Sampling and Inspection of Seeding and Landscaping Materials	pp 1-3	Jun 2004
MT 404	Inspecting Wood Products	pp 1	Jun 2004
MT 405	Wire Cloth Sieves for Testing Purposes	pp 1-4	Jun 2004
MT 406	Sampling and Inspection of Signing Material and Signs	pp 1-5	Jun 2004
MT 407	Method of Test for High Strength Bolts	pp 1-4	Sep 2005
MT 408	Method of Sampling and Field Testing Liquid Deicing Material	pp 1-4	Feb 2010
MT 409	Welded Stud Shear Connectors	Under Development	
MT 410	Inspection, Sampling, Testing and Acceptance of Paint	pp 1-3	Jun 2004
MT 411	Vacant		
MT 412	Topsoil Sampling, Sample Preparation and Testing	pp 1-2	Jun 2004
MT 413	Inspection of Fencing Materials	pp 1-2	Sep 2005
MT 414	Method of Acceptance for Reinforcing Steel	pp 1-5	Jun 2009
MT 415	Structural Steel	Under Development	
MT 416	Vacant		
MT 417	Vacant		
MT 418	Method of Acceptance for Miscellaneous Welded Items	pp 1	Jun 2004
MT 419	Vacant		
MT 420	Procedure to Check for Leaks Under Hydrostatic Pressure	pp 1-3	Jun 2004
MT 421	Sampling Construction Fabrics	pp 1-2	Jun 2009
MT 422	Method of Test for Surface Smoothness and Profile	pp 1-4	Apr 2012

METHODS OF SAMPLING AND TESTING
MT 401-07
METHOD OF SAMPLING AND INSPECTING CORRUGATED ALUMINUM PIPE
(AASHTO M196, M197)

1 Scope:

1.1 This specification covers the testing and inspection guidelines for aluminum clad alloy culverts and underdrains.

2 Referenced Documents:

2.1 ***AASHTO:***
M196 Corrugated Aluminum Pipe for Sewers and Drains
M 197 Aluminum Alloy Sheet for Corrugated Aluminum Pipe

ASTM:
B 209 Specification for Aluminum and Aluminum-Alloy Sheet and Plate

3 Sampling:

3.1 Sampling shall be performed or witnessed by the testing agency at the point of fabrication.

3.2 Random sampling shall consist of at least one set of three 1” x 12” samples per gauge, alloy and temper, lot number and type of corrugation. Samples shall be obtained a minimum of 3” from any edge.

3.3 Previously tested material that is properly marked and accepted need not be re-sampled but must be listed in the test report.

3.4 In the event that the samples fail to comply, two additional sets of three samples will be taken from the same gauge, alloy and temper, lot number and type of corrugation. Both sets must comply with the requirements or the entire lot number will be rejected.

3.5 Each corrugated sheet used in annular corrugated pipe, and each 2 ft. (0.6m) to 5 ft. (1.5m) of coiled sheet used in helically corrugated pipe, shall be identified by the fabricator showing the following:

3.5.1 Name of sheet manufacturer.

3.5.2 Identification of the pipe fabricator, if different than the sheet manufacturer.

3.5.3 Alloy and temper.

3.5.4 Specified thickness.

3.5.5 Fabricator’s date of corrugating or forming into pipe by a six (6) digit number indicating in order the year, month and day of the month.

3.6 The marking shall be applied to the sheet by a permanent method such as coining into the metal. This identification shall appear on the outside of the pipe.

3.7 *Sheet Manufacturer’s Analysis:*
The manufacturer of each brand shall furnish a certificate setting forth the name or brand of aluminum alloy to be furnished, and a statement that the material conforms to the specified chemical composition limits. The certificate shall be sworn to for the manufacturer by a person having legal authority to bind the company.

3 Fabrication: (continued)

3.8 *Sheet Manufacturer's Guarantee:*
The manufacturer of the sheets shall submit, with the analysis, a guarantee providing that all aluminum alloy furnished shall conform to the applicable requirements of the latest revision of ASTM B209 for Alclad alloy 3004-H34 unless otherwise specified and shall bear a suitable identification brand or mark, and shall be replaced without cost to the purchaser when not in conformity with the specified analysis, sheet thickness, or cladding thickness, and the guarantee shall be so worded as to remain in effect so long as the manufacturer continues to furnish material.

3.9 Fabrication of the corrugated aluminum pipe shall conform to the requirements of AASHTO M 196, the Standard Specifications, and the plans for the specific project, and the Special Provisions.

4 Certification:

4.1 The testing agency shall submit appropriate manufacturer's mill test reports and chemical analysis representing each lot number used. The certification shall be submitted with the samples, and under separate cover. The reports shall include the following:

4.1.1 Lot number.

4.1.2 Gauge.

4.1.3 Corrugation size.

4.1.4 Diameter and quantity of pipe.

4.1.5 Type of seam.

4.1.6 Name of supplier.

4.1.7 Montana highway project for which the material is designated.

5 Approval for Shipments of Culverts

5.1 Culverts and/or related material shall not be approved for shipment until they have been found to comply with our specifications.

5.2 Evidence of approval shall be by means of the inspecting agency's ID stamp or tag placed on a noticeable location on each section of the inspected material.

5.3 In the event of any questions pertaining to the approval for shipment of culverts and/or related material, contact the Materials Bureau.

6 Field Inspection and Acceptance

6.1 The field inspection shall be made by the Project Manager who shall be furnished by the seller with an itemized statement of the sizes and lengths of culvert pipe in each shipment. This inspection shall include an examination of the culvert pipe for deficiency in length of finished pipe, and any evidence of damage during shipment. Along with the proper approval stamp or tag from the inspecting agency.

METHODS OF SAMPLING AND TESTING
MT 402-04
METHOD OF SAMPLING AND TESTING CORRUGATED STEEL PIPE
(AASHTO M 36)

1 Scope:

1.1 The specification covers corrugated steel pipe intended for use for storm water drainage, under-drains, the construction of culverts, and similar uses. The steel sheet used in fabrication of the pipe has a protective metallic coating of zinc (galvanizing), aluminum, or aluminum-zinc alloy.

2 Referenced Documents:

2.1 ***AASHTO:***
M 36 Corrugated Steel Pipe, Metallic-Coated, for Sewers and Drains

3 Sampling Procedure:

3.1 Sampling shall be performed or witnessed by MDT or an approved inspecting agency at the point of manufacture.

3.2 Random sampling shall consist of at least one set of three 3” x 3” samples per gauge, heat number, lot number and type of corrugation. Samples shall be obtained a minimum of 3” from any edge.

3.3 Previously tested material that is properly marked and accepted need not be re-sampled, but must be listed in the test report.

3.4 In the event that the samples fail to comply, two additional sets of three samples will be taken from the same gauge, heat number, lot number and type of corrugation. Both additional sets must comply with the requirements or the entire lot number will be rejected.

4 Fabrication:

4.1 Fabrication of the corrugated steel pipe shall conform to the requirements of AASHTO M 36, the Special Provisions, the Standard Specifications, and the plans for the specific project.

5 Certification:

5.1 The inspecting agency shall verify that all materials are in compliance with the “Buy America” provision in the Montana Standard Specifications for Road and Bridge Construction. Upon receipt of the materials, the Contractor will submit the appropriate test reports and chemical analysis representing each lot number on the Contractors Certificate of Compliance, Form 406. The reports shall include the following:

5.1.1 Lot number

5.1.2 Heat number.

5.1.3 Gauge.

5.1.4 Corrugation size.

5.1.5 Diameter and quantity of pipe.

5 Certification: (continued)

5.1.6 Type of seam.

5.1.7 Weight of coating in oz/ft² or g/m².

5.1.8 Name of supplier.

5.1.9 Montana Department of Transportation project for which the material is designated.

5.1.10 Two copies of the report are to be forwarded to the District Laboratory.

6 Approval for Shipment of Culverts:

6.1 Culverts and/or related material shall not be approved for shipment until they have been found to comply with our specifications.

6.2 Evidence of approval shall be by means of the inspecting agencies ID stamp or tag placed on a noticeable location on each section of the inspected material.

6.3 In the event of any questions pertaining to the approval for the shipment of culverts and/or related material, contact the Materials Bureau.

7 Field Inspection and Acceptance:

7.1 Field inspection shall be made by the Engineering Project Manager who shall be furnished by the seller with an itemized statement of the sizes and lengths of culvert pipe in each shipment. This inspection shall include an examination of the culvert pipe for deficiency in length and any evidence of damage during shipment along with the proper approval stamp or tag from the inspecting agency and be submitted on a Form 46.

METHODS OF SAMPLING AND TESTING
MT 403-04
SAMPLING AND INSPECTION OF SEED, FERTILIZER MULCH, EMULSIFIED BINDER, PEAT MOSS AND NURSERY STOCK

1 Scope:

1.1 Sampling, sample preparation and submittal, supervision of seed blending.

2 Referenced Documents:

2.1 ***MT Manual:***
MT 412 Topsoil Sampling, Sample Preparation and Testing

3 Sampling Procedure:

3.1 All proposed seed, other than Montana certified "blue tag" seed, will be sampled under MDT supervision. Resampling will not be required if the proposed seed has been pretested at the grain and seed laboratory at Montana State University within a period of twelve (12) months. A miscellaneous sample sheet listing the supplier's name and all the information given on the purity and germination tag must be submitted to the Materials Bureau. List the name and approximate number of each kind or specie of restricted noxious weed seeds occurring per pound on the purity and germination tag. Acceptance of seed is based on compliance with the Standard Specifications for Road and Bridge Construction.

3.2 When sampling seeds in bags, a trier long enough to reach all areas in the bag will be used. The trier must be designed so that it will remove an equal volume of seed from each part of the bag through which the trier travels. Unless the trier has partitions in the seed chamber, it must be inserted into the bags horizontally. Sample non-free-flowing seeds difficult to sample with a trier by thrusting the hand into the seed and removing representative portions. When a sample is taken with the hand, insert the hand flat and with the fingers together. Keep the fingers together as the hand is closed and withdrawn. Because of possible segregation, hand samples should be taken from various locations in the bags.

3.2.1 Seed in bags.

3.2.1.1 For lots of one to six bags, sample each bag.

3.2.1.2 For lots of more than six bags, sample five bags plus at least 10% of the number of bags in the lot. Round numbers with decimals to the nearest whole number. Regardless of the lot size, it is not necessary to sample more than 30 bags.

3.2.1.3 Closed and open bags should be sampled with a long trier, probe, or bag sampler extending the full length of the bag. In sampling open bags it must be recognized that the sample may not represent the original shipment.

3.2.1.4 A trier or probe is available from the Materials Bureau on request and must be returned immediately upon completion of sampling.

3.2.1.5 Seed which has been pretested under Materials Bureau supervision need not be resampled by project personnel. If there is a reason to believe that the material received on the project has not been pre-tested, the sampling procedure described above shall be adhered to.

3 Sampling Procedure: (continued)

3.3 Submit a one quart (one liter) container for each lot of seed sampled. Should the total quantity of seed sampled be in excess of one quart (one liter), reduce the sample by means of quartering or splitting.

3.4 Submit the seed sample along with the purity and germination tag directly to the Seed Lab at Montana State University. Submit a miscellaneous sample sheet with the following information to the Materials Bureau: all pertinent project information, supplier's name and address, kind of seed, all of the information given on the purity and germination tag and the amount of seed the sample represents.

3.5 Blending supervision - Seed blending performed in the field will be supervised on the job site by project personnel. Arrangements will be made for the supervision of blending when performed by a dealer or supplier. A blending report will be submitted to the Materials Bureau.

3.6 On each seeding project, retain a one quart container of each blend until such time as the project has been completed and accepted. The same will apply to seed not incorporated in a blend, but applied directly. This will constitute a referee sample should a question arise relative to the purity and germination of the original sample.

4 Fertilizer:

4.1 Sampling will be performed by field personnel at the project site. In the case of blended fertilizer, a sample of the blended material will be sampled for analysis. Obtain sufficient material to fill a one quart (one liter) container from the top, center, and bottom of each fertilizer container to be sampled. Only one sample will be required from each lot, except that sampling is not required for projects under 500 pounds.

4.2 Each sample submitted to the Materials Bureau will be accompanied by the certified chemical analysis tag, a miscellaneous field sheet listing the supplier's name, the kind of fertilizer, the lot number, all of the information given on the certified chemical analysis tag, and the total pounds the sample represents.

5 Mulch:

5.1 *Vegetative mulch* - The project inspection of mulch for conformance with the Standard Specifications will be arranged by field personnel. In connection with this inspection, the Materials Bureau will be furnished with a report which will include the following information: Source, type, condition, purity, and moisture content of the mulch.

5.2 *Wood cellulose fiber mulch* - The project inspection of mulch for conformance with the Standard Specifications will be arranged by field personnel. In connection with this inspection, the Materials Bureau will be furnished with a report, which will include the following information: Source, type, and moisture content of the mulch.

5.3 *Peat moss* - A one pound representative sample will be submitted to the Materials Bureau for pH analysis.

5.4 *Bark chip mulch* - Bark chips derived from the bark of Douglas Fir, Pine, or Hemlock will be acceptable. All material must be reasonably free from weed seeds and other foreign material such as grasses, chaff, and substances toxic to plant growth. Individual bark chips will have a maximum dimension of 3 inches and not more than 10% of the chips can pass through a 3/4 inch sieve. A 25-pound sample will be submitted to the Materials Bureau for testing.

5 **Mulch:** (continued)

5.5 *Manure* - The term "Manure" will apply to stockpiled, well-rotted cattle, sheep, or horse manure or combinations of such, more than one year old, reasonably free of debris and foreign matter. Before being used in any planting operation, the manure must be shredded to break up large chunks and to assure proper mixing with other materials. Before any manure is hauled to the project site it must be approved by the landscape architect or engineer.

5.6 *Fabricated netting* - The project inspection of netting for conformance with the Standard Specifications will be arranged by field personnel. In connection with this inspection, the Materials Bureau shall be furnished with a report which shall include the source, type, and condition of the material.

6 **Emulsified Binder:**

6.1 When the quantity of emulsified binder is in excess of 10,000 gallons, a one-quart representative sample of the emulsified asphalt proposed for use on the project shall be submitted to the Materials Bureau. Ship emulsified binder in plastic containers.

7 **Topsoil:**

7.1 With the exception of topsoil which has been stripped and is stockpiled for later replacement, a two pound sample of each kind or type will be sampled and tested in accordance with MT-412.

8 **Sod:**

8.1 The material will be inspected on-site, a miscellaneous field sample sheet (Form 46) will list source, grass specie, and thickness of sod, and also the total quantity of material represented by the sample, and forwarded to the Materials Bureau.

9 **Nursery Stock:**

9.1 The project inspection of nursery stock will be performed by the Manager, Field Project Unit for conformance with the specifications contained in the project proposal. In connection with this inspection, the Materials Bureau is to be furnished with a report which will include the following information: supplier, stock name, quantity, condition, minimum and maximum size or spread of trees and shrubs, whether of nursery or collected stock, whether stock is bare-root, balled and burlapped or plotted and number of trees and shrubs accepted.

9.2 The following is an example of a nursery stock inspection report:

COMMON NAME	BOTANICAL NAME	QUANTITY	SIZE
Ponderosa Pine	Pinus ponderosa	6	1'6" - 1'0"

All of the specified size, all potted nursery stock, all in good condition and all accepted.

Common Lilac	Syringa Vulgaris	140	25" - 35"

All of the specified size, all nursery stock, all in good condition and all accepted.

METHODS OF SAMPLING AND TESTING
MT 404-04
METHOD FOR INSPECTING WOOD PRODUCTS
(Montana Method)

1 Scope:

1.1 This method includes the inspection of all wood products at the mills, the treating plant and after shipment to the job-site.

1.2 A detailed procedure for inspecting wood products is not included in this method because the primary responsibility for such inspections is charged to the Inspector at the Materials Bureau. In the event division or other personnel are required to make inspections of wood products, attention is directed to paragraph 5.1, below.

2 Mill Inspection:

2.1 Plant inspection of all wood products will consist of checking grade, dimensions, etc., in accordance with the applicable section in the Standard Specifications.

3 Treating Plant Inspection:

3.1 (Wood products to be treated may be inspected in the white to determine its suitability for treatment.) After treating is completed, the wood products must be inspected again for:

3.1.1 Adequacy of the treatment.

3.1.2 Damage which may have been caused by or during the treating cycle, or in subsequent handling.

3.2 It is essential that the treating plants call the Materials Bureau at least 48 hours in advance of the time requested for an inspection.

4 Final Inspection:

4.1 At the time of final inspection, all acceptable large timbers (guardrail posts, pilings, sign posts, etc.) are individually stamped with the Circle (M) stamping hammer which denotes acceptance prior to shipment.

4.2 The acceptance of small items (fence posts, etc.) prior to shipment is indicated by inspection seals attached to each bundle.

5 Job-Site Inspection:

5.1 In the event that the inspector from the Materials Bureau is unable to perform the inspection at the plant, Division personnel may be called upon to perform the inspection in the field. Division personnel are directed to contact the Materials Bureau for specific instructions.

5.2 All wood products are subject to final field approval after delivery to the project.

METHODS OF SAMPLING AND TESTING
MT 405-04
WIRE CLOTH SIEVES FOR TESTING PURPOSES
(Modified AASHTO M 92)

1 Scope:

1.1 This specification covers the requirements for the design and construction of sieves using a medium of woven-wire cloth mounted in a frame for use in testing for the classification of materials according to designated nominal particle size and wire cloth, meeting the specifications of Table 1, to be designated test grade wire cloth. All subsequent references to wire cloth shall mean test grade wire cloth.

2 Referenced Documents:

2.1 *AASHTO:*
M 92 Wire Cloth and Sieves for Testing Purposes

3 Sieve Cloth Requirements:

3.1 Wire cloth used in U.S.A. standard testing sieves meeting the specifications shown in Table 1 shall be designated “test grade”. Test grade cloth shall be woven from stainless steel, brass, bronze, or other suitable wire with a plain weave, except that cloth with openings of 63 µm (No. 230) and finer may be woven with a twill weave. The wire shall not be coated or plated.

3.2 The openings of the sieve cloth of successive sieves from a base of 1 mm in the ration of approximately $4\sqrt{2}$:1.

3.3 All measurements of openings and wire diameters shall be made along the midpoints of the opening.

3.4 Sieve cloth shall conform to the dimensional requirements of Table 1. The average opening (distance between parallel wires measured at the center of the opening), in the horizontal and vertical directions measured separately, shall conform to the values in Column 1, within the permissible variation in average opening size shown in column 4. Not more than 5% of the openings shall exceed the value shown in Column 5. The maximum individual opening size shall not exceed the value shown in Column 6.

3.4.1 The average diameter of the horizontal and vertical wires, measured separately, shall conform to the diameter in Column 7 within the tolerances in Footnote A of Table 1.

3.5 Wires shall be crimped in such a manner that they will be rigid when in use.

3.6 There shall be no punctures or obvious defects in the wire cloth.

4 Test Sieve Frames:

4.1 *General Requirements* - Frames for wire cloth sieves shall be constructed in such a manner as to be rigid. The wire cloth shall be mounted on the frame without distortion, looseness or waviness. To prevent the material being sieved from catching in the joint between the wire cloth and the frame, the joint shall be filled smoothly or constructed so the material will not be trapped.

4.2 *Standard Frames*--The standard sieve frame shall be circular with nominal diameters of 3, 6, 8, 10 or 12 inches (76, 512, 203, 254, or 305 mm) as may be specified. The dimensions shall conform to the requirements of Table 2. Frames shall be made from noncorrosive material such as brass or stainless steel and be of seamless construction.

4 Test Sieve Frames: (continued)

4.2.1 The bottom of the frame shall be constructed so as to provide an easy sliding fit with any sieve frame of the same nominal diameter conforming to the specified dimensions.

4.2.2 The joint or fillet at the connection of the sieve cloth to the frame will provide a minimum clear sieving surface with a diameter equal to the nominal diameter less 0.5 in. (13 mm).

4.3 *Nonstandard Frames* – Other sieve frames may be square, rectangular, or circular. The frame may have the sieve cloth permanently installed, or be designed to permit replacement. The provisions of 5.1 apply.

Note 1 – While there are no requirements for nesting of nonstandard frames, care should be applied in the use to prevent loss of material during analysis.

4.4 *Pans and Covers* – Pans and covers for use with sieves shall be made so as to nest with the sieves. Pans with extended rims ("stacking skirts") shall be furnished when specified. The pans and covers shall conform to the dimensions of Table 2.

5 Product Marking:

4.1 Each sieve shall bear a label marked with the following information:

4.1.1 U.S.A. Standard Testing Sieve,

4.1.2 ASTM designation E 11,

4.1.3 Standard sieve designation (from Table 1, Column 1),

4.1.4 Name of manufacturer or distributor, and

4.1.5 Alternative sieve designation (from Table 1, Column 2) Optional.

4.1.6 Each test sieve shall bear a unique serial number permanently engraved or etched onto the sieve frame, skirt or nameplate.

TABLE 1 Nominal Dimensions, Permissible Variations for Wire Cloth of Standard Test Sieves (U.S.A. Standard Series)

Sieve Designation Standard[b] mm	Alternative	Nominal Sieve Opening, in.[c]	Permissible Variation of Average Opening from the Standard Sieve Designation mm	Maximum Opening Size for Not More than 5% of Openings mm	Maximum Individual Opening mm	Nominal Wire Diameter, mm[a]
(1)	(2)	(3)	(4)	(5)	(6)	(7)
125	5 in.	5	±3.7	130.0	130.9	8.0
106	4.24 in.	4.24	±3.2	110.2	111.1	6.40
100[d]	4 in.[d]	4	±3.0	104.0	104.8	6.30
90	3½ in.	3.5	±2.7	93.6	94.4	6.08
75	3 in.	3	±2.2	78.1	78.7	5.80
63	2½ in.	2.5	±1.9	65.6	66.2	5.50
53	2.12 in.	2.12	±1.6	55.2	55.7	5.15
50[d]	2 in.[d]	2	±1.5	52.1	52.6	5.05
45	1¾ in.	1.75	±1.4	46.9	47.4	4.85
37.5	1½ in.	1.5	±1.1	39.1	39.5	4.59
31.5	1¼ in.	1.25	±1.0	32.9	33.2	4.23
26.5	1.06 in.	1.06	±0.8	27.7	28.0	3.90
25.0[d]	1 in.[d]	1	±0.8	26.1	26.4	3.80
22.4	7/8 in.	0.875	±0.7	23.4	23.7	3.50
19.0	3/4 in.	0.750	±0.6	19.9	20.1	3.30
16.0	5/8 in.	0.625	±0.5	16.7	17.0	3.00
13.2	0.530 in.	0.530	±0.41	13.83	14.05	2.75
12.5	1/2 in.[d]	0.500	±0.39	13.10	13.31	2.67
11.2	7/16 in.	0.438	±0.35	11.75	11.94	2.45
9.5	3/8 in.	0.375	±0.30	9.97	10.16	2.27
8.0	5/16 in.	0.312	±0.25	8.41	8.58	2.07
6.7	0.265 in.	0.265	±0.21	7.05	7.20	1.87
6.3[d]	1/4 in.[a]	0.250	±0.20	6.64	6.78	1.82
5.6	No. 3½	0.223	±0.18	5.90	6.04	1.68
4.75	No. 4	0.187	±0.15	5.02	5.14	1.54
4.00	No. 5	0.157	±0.13	4.23	4.35	1.37
3.35	No. 6	0.132	±0.11	3.55	3.66	1.23
2.80	No. 7	0.111	±0.095	2.975	3.070	1.10
2.36	No. 8	0.0937	±0.080	2.515	2.600	1.00
2.00	No. 10	0.0787	±0.070	2.135	2.215	0.900
1.70	No. 12[c]	0.0661	±0.060	1.820	1.890	0.810
1.40	No. 14	0.0555	±0.050	1.505	1.565	0.725
1.18	No. 16	0.0469	±0.045	1.270	1.330	0.650
1.00	No. 18	0.0394	±0.040	1.080	1.135	0.580
0.850	No. 20	0.0331	±0.035	0.925	0.970	0.510
0.710	No. 25	0.0278	±0.030	0.775	0.815	0.450
0.600	No. 30	0.0234	±0.025	0.660	0.695	0.390
0.500	No. 35	0.0197	±0.020	0.550	0.585	0.340
0.425	No. 40	0.0165	±0.019	0.471	0.502	0.290
0.355	No. 45	0.0139	±0.016	0.396	0.425	0.247
0.300	No. 50	0.0117	±0.014	0.337	0.363	0.215
0.250	No. 60	0.0098	±0.012	0.283	0.306	0.180
0.212	No. 70	0.0083	±0.010	0.242	0.263	0.152
0.180	No. 80	0.0070	±0.009	0.207	0.227	0.131
0.150	No. 100	0.0059	±0.008	0.174	0.192	0.110

TABLE 1 Nominal Dimensions, Permissible Variations for Wire Cloth of Standard Test Sieves (U.S.A. Standard Series)

Sieve Designation Standard[b] mm	Alternative	Nominal Sieve Opening, in.[c]	Permissible Variation of Average Opening from the Standard Sieve Designation mm	Maximum Opening Size for Not More than 5% of Openings mm	Maximum Individual Opening mm	Nominal Wire Diameter, mm[a]
(1)	(2)	(3)	(4)	(5)	(6)	(7)
0.125	No. 120	0.0049	±0.007	0.147	0.163	0.091
0.106	No. 140	0.0041	±0.006	0.126	0.141	0.076
0.0090	No. 170	0.0035	±0.005	0.108	0.122	0.064
0.075	No. 200	0.0029	±0.005	0.091	0.103	0.053
0.063	No. 230	0.0025	±0.004	0.077	0.089	0.044
0.053	No. 270	0.0021	±0.004	0.066	0.076	0.037
0.045	No. 325	0.0017	±0.003	0.057	0.066	0.030
0.038	No. 400	0.0015	±0.003	0.048	0.057	0.025
0.032[d]	No. 450[d]	0.0012	±0.003	0.042	0.050	0.028
0.025[d]	No. 500[d]	0.0010	±0.003	0.034	0.041	0.025
0.020[d]	No. 635[d]	0.0008	±0.003	0.029	0.035	0.020

TABLE 2 Dimensions of Standard Frames

Nominal Diameter	Mean Diameter, in. (mm)		Typical Frame[A]
In.	Inside at Top[B]	Outside of Skirt	Nominal Height[C] in. (mm)
3	3.000 + 0.030/-0.000	3.000 + 0.000/-0.030	1 1/4 (32) FH[D]
	(76 + 0.76/ -0.00)	(76 + 0.00/ -0.76)	5/8 (16) HH
6	6.000 + 0.030/-0.000	6.000 + 0.000/-0.030	1 3/4 (45) FH
	(152 + 0.76/ -0.00)	(152 + 0.00/ -0.76)	1 (25) HH
8	8.000 + 0.030/-0.000	8.000 + 0.000/-0.030	2 (50) FH
	(203 + 0.76/ -0.00)	(203 + 0.76/ -0.76)	1 (25) HH
10	10.000 + 0.030/-0.000	10.000 + 0.000/-0.030	3 (76) FH
	(254 + 0.76/ -0.00)	(254 + 0.00/ -0.76)	1 1/2 (38) HH
12	12.000 + 0.030/-0.000	12.000 + 0.000/-0.030	3 1/4 (83) FH
	(305 + 0.76/ -0.00)	(305 + 0.00/ -0.76)	2 (50) IH
			1 5/8 (41) HH

[A] Other frame heights are not precluded.
[B] Measured 0.2 in. (5 mm) below the top of the frame.
[C] Distance from the top of the frame to the sieve cloth surface.
[D] FH = full height, HH = half height, IH = intermediate height.

METHODS OF SAMPLING AND TESTING
MT 406-04
METHOD OF INSPECTING, SAMPLING, AND TESTING SIGNING MATERIAL, INSPECTION OF SIGNS, AND SUBMITTAL OF TEST AND INSPECTION REPORTS
(Montana Method)

1 Scope:

1.1 Following the determination of a successful bidder, and upon the letting of a project to contract, a letter is sent to the prime contractor by the Materials Bureau requesting the source of bid items in the contract. These items include signing material and signs. Upon receipt of the information, the Certification Inspection Supervisor in the Materials Bureau will arrange for inspection. The following procedures and requirements shall be observed whenever signs are included in a project.

2 Referenced Documents:

2.1 Montana Department of Transportation Detailed Drawings

3 Reporting:

3.1 A copy of all correspondence, test results, certificates and other pertinent documents shall be submitted to the Materials Bureau, attention Certification Inspection Supervisor.

4 Signing Material:

4.1 Inspection of signing material will be performed by either another state, by a commercial inspection and testing agency, or if the material was not pre-inspected by field personnel.

5 Sign Fabrication Inspection:

5.1 Sign fabrication inspection involves visual observation of sign materials, fabrication procedures, and the manufactured product to ensure that it will serve the intended purpose for its expected performance life.

5.2 Material specifications are outlined in the Standard Specifications for Road and Bridge Construction and in the contract special provisions. Materials used in the fabrication of highways signs are inspected by an inspection agency for each construction contract.

5.3 In-Plant sign inspection and approval does not constitute mandatory acceptance by the Project Manager of the delivered product. It is possible that signs may be damaged in transit because of inadequate packaging or poor handling and will be rejected at the project site. Approval of a sign at the point of fabrication means that the inspector has assured himself that all materials used meet the plan specifications and that finished signs are satisfactory in appearance and workmanship.

6 Materials:

6.1 *Inspection & Sampling:* Following is a listing of the materials used in the fabrication of signs and the required sampling procedures before the subject material may be approved for use.

6.2 6061 T6 or 5052 H38 Aluminum Sheeting can be accepted on certification of conformance and certified mill test reports. No sample is required unless deemed necessary by the Inspector. If samples are required, they shall be sampled as follows: Two samples of size 3/4 inch x 9 inch of each gauge will be taken from each consignment of aluminum received for signing. Samples will be oriented with the longer dimension parallel to the direction of rolling. The Materials Bureau will

6 Materials: (continued)

machine these samples to comply with ASTM E8-80A. A Certificate of Compliance including Certified Mill Test Reports of each gauge is required.

6.3 *Aluminum Sign Blanks:* Each consignment of aluminum sign blanks is spot checked with a micrometer for gauge thickness conformance. Certificates of Compliance and a Certified Mill Test Report of each gauge are required.

6.4 *6063 T6 Extruded Aluminum T-Sections (Wind Beam):* Certificates of Compliance, Certified Mill Test Reports, and Chemical Analysis are required for each order. No sample is required unless deemed necessary by the Inspector.

6.5 *HD (High Density) Plywood:* The minimum allowable plywood grade shall be B-B high density overlay 60/60 with amber overlay on both sides, and a minimum thickness of 3/4" or as shown on plans. A spot check on thickness requirements, grade-trademark for Grade and Type of plywood, and a letter attesting to the standard of the plywood received is required. No sample is required unless deemed necessary by the Inspector.

6.6 *Reflective Sheeting:* A portion of each roll will be visually inspected for imperfections. A Certificate of Compliance including the type, grade, color, and purchase order number is required for each roll used in the signing fabrication.

Note 1 -Reflective sheeting from each manufacturer will be sent to the Materials Bureau for reflectivity testing on an annual basis.

6.7 *Sign Faces:* No sampling is required for reflective or non-reflective sign faces. A visual inspection for conformance and imperfections will be performed on each order of sign faces received. A Certificate of Compliance is required for each shipment. The certificate will include type of material and purchase order number.

6.8 *Applied or Demountable Copy* A Certificate of Compliance is required for each order prior to usage. The reflective sheeting for <u>all</u> sign copies shall be Silver-White No. 2 (Parkway - if a 3M product). Encapsulated lens, wide angle reflective sheeting may be used when specified in the plans.

7 Fabrication: Items to be observed by the Inspector During Sign Fabrication:

7.1 Approved materials.

7.2 Visual check of material color and color match with a 150 watt flood light held at eye level at a distance of 50 feet from material being observed.

7.3 Visual check of uniform legend color tone and uniform reflectivity with a 150 watt flood light held at eye level at a distance of 50 feet from legend being observed.

7.4 Visual check of splices.

7.5 Fabrication

7.5.1 Correct thickness of aluminum or plywood.

7.5.2 Correct material for reflectorized and non-reflectorized signs, (sheeting and copy).

7.5.3 Correct "T" sections (wind beam) and proper spacing of "T" sections, (Standard Drawing No. 619-04 and 619-06).

7 **Fabrication:** Items to be observed by the Inspector During Sign Fabrication: (continued)

7.5.4 Correct spacing of rivets with heads painted to match signs, (Standard Drawing No. 619-04).

7.5.5 Correct spacing of aluminum clips on "T" sections on plywood, (Standard Drawing No. 619-06).

7.5.6 Correct sign size, color, and whether copy and background sheeting are reflectorized or non-reflectorized.

7.5.7 Corners of control signs rounded.

7.5.8 Corners of guide signs rounded when so noted on plans.

7.6 **Non-Standard Items:**

7.6.1 Conformance to contract special provisions. Conformance to special mounting details shown on the plans.

8 **Application of Materials:**

8.1 Use of approved equipment and qualified personnel.

8.2 Sheeting properly applied.

8.3 Absence of foreign particles under applied sheeting.

8.4 Absence of air bubbles under applied sheeting.

8.5 Absence of loose edges.

9 **Workmanship:**

9.1 Correct sign layout and size.

9.2 Sharp clear screened sign messages.

9.3 Proper horizontal and vertical spacing.

9.4 Correctly spelled words.

9.5 Symbols correctly depicted.

9.6 Back of sign clean and free of corrosion.

9.7 Sign number on back of guide signs.

10 **Design Conformance:**

10.1 Completed Signs:

10.1.1 All completed signs will conform to the Manual on Uniform Traffic Control Devices, and Standard Highway Signs as specified in the MUTCD, 1978 with addendums; except as may be provided for in the Montana Standard Drawings, Montana Sign Index, or contract plans and approved shop drawings.

10 Design Conformance: (continued)

10.1.2 All completed signs that are in conformance will be stamped on the back of the sign, by the inspector, with the inspecting agency's stamp of approval.

10.1.3 Test reports for signing material, inspected and sampled by a commercial agency, will be sent to the inspecting agency by the Materials Bureau upon completion of the tests.

10.1.4 Test reports for material sampled by field personnel will be issued upon completion of the tests.

10.1.5 The supplier for all major signing material must provide the manufacturer’s Certificates of Compliance. Copies of all certificates will be kept in the Materials Bureau project files.

10.1.6 Acceptance reports for material used on pre-inspected signs that were supplied from out-of-state will be submitted to the field in the final report.

10.1.7 The field shall provide the Materials Bureau with inspection and acceptance reports whenever un-inspected signing material that has been supplied from out-of-state is delivered to the project. (Section 10.2.4).

10.2 Signs Supplied Locally or from Out-of-State:

10.2.1 Signs that have been supplied locally or out-of-state are inspected at the source as designated by the Materials Bureau. Following inspection, a report listing the number and kind of signs will be submitted to the field and to the Materials Bureau.

10.2.2 In the event that the signs have not been pre-inspected, the Materials Bureau shall require a Field Inspection and Acceptance Report in addition to the manufacturer's Certificates of Compliance (Section 10.1.5).

10.2.3 Signs are inspected for conformance with the Montana Department of Transportation specification requirements. Locally inspected signs will bear evidence of having been inspected by the presence of the inspecting agency's stamp of approval. Unpackaged signs will bear a stamp on the back of the sign, while packaged signs will bear a stamp on the package face.

10.2.4 Locally supplied signs that have not been inspected may be delivered to a project only in the case of extreme urgency for installation. For such cases, the suppliers have been directed to immediately forward a letter to the Materials Bureau and to the Project Manager describing the circumstances under which the signs (not inspected) were shipped. This letter must designate the project and location to which the signs were delivered and list the kind and quantity of signs. Signs that have been shipped without inspection shall not be accepted until the manufacturer has submitted this letter.

10.2.5 It is imperative that the Materials Bureau, attention Certification Inspection Supervisor, be informed of the field inspection and acceptance of all signs that do not show evidence of inspection at the source. The following information will be included in this inspection report:

10.2.5.1 Appearance and workmanship

10.2.5.2 Conformance to specifications

10.2.5.3 Type, size, and quantity

10.2.5.4 Gauge of aluminum

10.2.5.5 Thickness or ply of plywood

10 Design Conformance: (continued)

10.3 Final Signing Material and Sign Acceptance Reports:

10.3.1 Signing material and signs which have been inspected by a commercial agency will be accepted upon receipt of all required Certificates of Compliance.

10.3.2 Signing material and signs which have been supplied from out-of-state but which have not been inspected will be accepted upon receipt of required certificates from the supplier, a field inspection, and an acceptance report.

10.3.3 Signing material and signs which have been supplied from out-of-state and have been inspected by a commercial agency will be accepted on the reports issued by the agency.

10.3.4 Signing material and signs which have been supplied locally and have been inspected by the District will be accepted on the reports issued by the District.

10.3.5 All signing material and signs, regardless of source and inspection procedure, are subject to final field approval.

METHODS OF SAMPLING AND TESTING
MT 407-05
METHOD OF TEST FOR HIGH-STRENGTH BOLTS

1 Scope:

1.1 The method covers rotational capacity testing of high strength bolts used in bridge construction.

2 Referenced Documents:

2.1 ***AASHTO:***
M 164 (M 164M), High-Strength Bolts for Structural Joints
M 291 (M 291M), Carbon and Alloy Steel Nuts
M 292 (M 292M), Carbon and Alloy Steel Nuts for Bolts for High-Pressure or High-Temperature Service or Both

Procedure A: (Long Bolts in Tension Calibrator)

3 Apparatus:

3.1 A Skidmore-Wilhelm calibrator for measuring bolt tension, of sufficient capacity for the bolts to be tested.

3.2 Calibrated torque wrench.

3.3 Spacers and/or washers with a maximum hole size $^{1}/_{16}$ in. (2mm) larger than the bolt to be tested.

3.4 A steel section on which to mount the bolt calibrator. The flange of a girder or a cross-frame accessible from the ground is acceptable.

4 Procedure:

4.1 Use black fasteners oily to the touch at testing. Clean all weathered or rusty fasteners of all rust and re-lubricate prior to testing. Lubricate all galvanized fasteners with a visible dye, so a visual check verifies the lubricant's presence.

4.2 Measure the bolt length, not including the head.

4.3 Thread a nut onto the bolt with sufficient spacers or washers to bring the bolt end to at least flush with the tightened nut to a maximum bolt stick-out of three threads. Provide 3 to 5 threads between the inside faces of the nut and the bolt head. Always use a hardened washer under the nut.

4.4 Tighten the nut with a wrench to produce the appropriate snug tension from Table 1, with an allowable error range from 0 kips to +2 kips (0 to + 9 kn). The snug condition should be the normal effort applied with a 12-inch wrench.

Table 1

Bolt Dia. (in.)	½	5/8	¾	7/8	1	1 1/8	1 ¼	1 3/8	1 1/2
Snug Tension (kips)	1	2	3	4	5	6	7	9	10

Bolt Dia. (mm)	20	22	24
Snug Tension (kN)	13	18	23

4 **Procedure:** (continued)

4.5 Match-mark the bolt, nut and face plate of the calibrator.

4.6 Using the torque wrench, tighten the nut to at least the tension in Table 2. Record the bolt tension and the torque that produced the tension. (Measure the torque with the nut in motion). Calculate the following value for maximum allowable torque given by: T = 0.25 PD, where P= tension in lbs. (N) and D = diameter of bolt in feet (m).

The fastener assembly fails the test at this point if the recorded torque exceeds the value, T, as calculated above.

Table 2

Bolt Dia. (in.)	½	5/8	¾	7/8	1	1 1/8	1 ¼	1 3/8	1 1/2
Tension (kips)	12	19	28	39	51	56	71	85	103

Bolt Dia. (mm)	20	22	24
Tension (kN)	125	173	227

4.7 Tighten the nut further by the number of turns shown in Table 3, using the radial lines on the calibrator faceplate for reference. The rotation is measured from the initial marking in step 4.5. Record the bolt tension. Bolt and nut assemblies which strip or fracture before achieving the full rotation have failed the test.

Table 3

Bolt Length	4 x bolt dia. or less	Greater than 4 but no more than 8 x dia.	Greater than 8 x dia.
Required Rotation	$^{2}/_{3}$	1	1 $^{1}/_{6}$

4.8 Compare the bolt tension recorded from Section 4.7 with the appropriate value from Table 4. Fastener assemblies that do not provide the minimum required tension shown in Table 4 at the rotation shown in Table 3 have failed the test.

Table 4

Bolt Dia. (in.)	½	5/8	¾	7/8	1	1 1/8	1 ¼	1 3/8	1 1/2
Tension (kips)	14	22	32	45	59	64	82	98	118

Bolt Dia. (mm)	20	22	24
Tension (kN)	142	200	262

4.9 Remove the nut and bolt from the calibrator and examine them. The fastener assembly has failed the test if threads show signs of stripping, shear or torsion failure or the nut fails to turn freely, by hand, on those threads occupied by the nut in the test position. (The nut does not have to freely turn the entire length of the thread to pass this test.)

Procedure B (Bolts too short for tension calibrator)

5 **Apparatus:**

5.1 Calibrated torque wrench and hand wrenches.

5.2 Spacers and/or washers with a maximum hole size $^{1}/_{16}$ in. (2mm) larger than the bolt.

5.3 A steel section with holes sized $^{1}/_{16}$ in. (2mm) larger then the bolt diameter, with a plate thickness that will accommodate section 6.3.

6 Procedure:

6.1 Use black fasteners oily to the touch at testing. Clean all weathered or rusty fasteners of all rust and re-lubricate prior to testing. Lubricate all galvanized fasteners with a visible dye, so a visual check verifies the lubricant's presence.

6.2 Measure the bolt length, not including the head.

6.3 Install the fastener assembly in the steel plate with sufficient spacers or washers to bring the bolt end out at least flush with the tightened nut, to a maximum bolt stick-out of three threads. Provide three to five threads in the length of bolt between the inside faces of the nut and bolt head. Always use a hardened washer under the nut.

6.4 Snug the bolt by applying no more than 20% of the torque allowed in Table 6 below, using a torque wrench. Measure and record the torque (with the nut in motion) on the bolt.

6.5 Match-mark the nut, bolt and plate.

6.6 Tighten the nut with the torque wrench by the number of turns from Table 5. Use a hand wrench to ensure that the bolt does not turn. Measure and record the torque with the nut in motion.

Table 5

Bolt Length	4 x bolt dia. or less	Greater than 4 but no more than 8 x bolt dia.
Required Rotation	$^1/_3$ turn	$^1/_2$ turn

If the measured torque from section 6.6 exceeds the appropriate value from Table 6, the fastener assembly has failed the test. Assemblies that fail prior to completing this rotation, by stripping or fracture, fail the test.

Table 6

Bolt Dia. (in.)	½	5/8	¾	7/8	1	1 1/8	1 ¼	1 3/8	1 1/2
Torque (Ft/lbs)	150	290	500	820	1230	1500	2140	2810	3690

Bolt Dia. (mm)	20	22	24
Tension (N-m)	710	1100	1570

6.7 Tighten the nut further by the appropriate number of turns from Table 7, using the reference mark from section 6.5. Assemblies that fail prior to completing this rotation, by stripping or fracture, fail the test.

Table 7

Bolt Length	4 x bolt dia. or less	Greater than 4 but no more than 8 x bolt dia.
Required Rotation	$^2/_3$ turn	1 turn

6.8 Remove the nut and the bolt from the plate and examine them. The fastener assembly has failed the test if threads show signs of stripping, shear or torsion failure or the nut fails to turn freely by hand, on those threads occupied by the nut in the test position. (The nut does not have to freely turn the entire length of the thread to pass this test.)

7 Report:

7.1 Date tested,

7.2 Name of tester,

7 **Report:** (continued)

7.3 Procedure performed (A or B),

7.4 Bolt length,

7.5 Bolt tension,

7.6 Bolt torque at tension.

Methods of Sampling and Testing
MT 408-10
Method of Sampling and Field Testing Liquid Deicing Material

1 Scope:

1.1 This method covers the sampling and testing of liquid magnesium chloride deicing material in the field.

2 Reference Documents:

2.1 Pacific Northwest Snowfighters (PNS) snow and ice control chemical products specifications and test protocols for the PNS association of British Columbia, Colorado, Idaho, Montana, Oregon and Washington.

2.2 ASTM E126 - 05a Standard Test Method for Inspection, Calibration, and Verification of ASTM Hydrometer

2.3 ASTM D891 - 09 Standard Test Methods for Specific Gravity, Apparent, of Liquid Industrial Chemicals

3 Terminology:

3.1 Deicer, a device or a chemical substance for preventing or removing ice.

4 Apparatus:

4.1 1-gallon jug (NEW, not used) and a label,

4.2 Hydrometer meeting ASTM E126 with an appropriate scale that includes the target range,

4.3 Hydrometer Cylinder,

4.4 Personal protection equipment (rubber gloves, eye protection, etc),

4.5 Deicer sampling checklist.

5 Field Inspection:

5.1 Document and maintain records on all deliveries, including those that are rejected.

5.2 Check to ensure that the product is being delivered according to the terms of the contract. Document the following information:

Bill of Lading with the following information:
Name of product
Supplier and manufacturer of product
Delivery Destination
Total number of units being delivered
Total weight of delivery using certified scale tickets or certified flow meter.
Lot number of product
Date of the order,
Date and time of delivery,
Verification of advance delivery notification,
Delivered in allowable times,
Name of Delivery Company and license plate numbers,

5 Field Inspection: (continued)

Are any price adjustment assessments required,
Is the product being delivered what was ordered,
Document all procedures prior to unloading,
Verify that all papers required of a delivery are present, complete and legible,
Legible and current MSDS,
Certified weight slip.

6 Unloading:

6.1 Visually inspect the discharge valve prior to unloading for the presence of any foreign material.

6.2 Visually inspect the delivered product again while unloading. If problems are noted that are a cause for rejection of the load, immediately halt the unloading process. Take photos and record any pertinent information. Conduct the following procedures if the material is to be rejected.

6.2.1 If the product fails the field inspection or testing, reload the product and reject the load.

6.2.2 If reloading can't be accomplished, (mixed with previous product) note the amount of the product pumped into the tank and total product now in the tank.

6.2.3 Circulate the contents of the tank and then take 2 one-gallon (4 liter) samples of the contaminated product now in the tank.

6.2.4 Determine and record the specific gravity of the samples.

6.2.5 Take appropriate action as needed to ensure the integrity of the product on hand if possible. Determine if all products on hand will have to be removed.

6.2.6 Forward all sample directly to MDT's Materials laboratory for testing.

6.2.7 Immediately advise the Purchasing Services Bureau of any ordering, delivery, storage, or product quality issues.

7 Sampling:

7.1 Remove one gallon of sample from the supplier's truck. Visually inspect the sample and reject the delivery if any foreign material is present.

7.2 Purge a minimum of one gallon of product to ensure hoses are free of contamination. Take a one-gallon sample from the transfer hose in three equal parts, compositely mixed together, to make up the sample that will be submitted to the laboratory for testing. Collect the samples during unloading as the first third, the second third and the last third of the product is being delivered. If the trailer or pup has compartments, take the three equal samples from only one of the compartments to complete the sample.

7.3 Determine the specific gravity of the sample, as described in Section 8. Retain the sample in case of dispute. Dispose of samples after notification by the Purchasing Services Bureau.

8 Specific Gravity Determination:

8.1 Carefully pour a sufficient quantity of deicer into a clean hydrometer cylinder, taking care to avoid the formation of air bubbles.

8 Specific Gravity Determination: (continued)

8.2 Slowly lower the hydrometer in the liquid and release it. After the hydrometer stabilizes and floats freely away from the walls of the cylinder, read the specific gravity at the point the meniscus intersects the hydrometer in accordance to ASTM D891.

8.3 Record your results on the Deicer Sampling Checklist.

Magnesium Liquid Deicer Sampling Checklist

1 Which tank will product be pumped into?_____

Gallons of de-icer in tank prior to pumping_____

Gallons after delivery_____

2 Before pumping any material, take a 1-gallon pre-sample. Visually inspect the sample for contamination with foreign material. Determine the specific gravity. Allow pumping to start and dispose of pre-sampled material and go to step 3. Re-sample the material if the sample appears to be contaminated or if it fails the specific gravity. If the second sample appears contaminated or fails the specific gravity, politely inform the delivery driver his product does not meet MDT specification and you must reject the load. If product is rejected immediately contact your supervisor. Retain the second sample for the supervisor.

Specific gravity of pre-sample _____

3 Choose one compartment from either truck or trailer to take the official sample. Purge a minimum of one gallon of product to ensure hoses are free of contamination. Take a one-gallon sample in three equal parts, compositely mixed together, to make up the sample that will be submitted to the laboratory for testing. Collect the samples during unloading as the first third, the second third and the last third of the product is being delivered. If the trailer or pup has compartments, take the three equal samples from only one of the compartments to complete the sample. Clean the outside of the sample container and attach the label.

4 Determine the specific gravity of the sample. This must be done in view of the delivery driver.

5 Record the following:

Samplers Name:_____Date: _____

Time:_____ Location:_____

Specific Gravity _____Tons of product delivered _____

Truck _____ or trailer _____ # the sample was taken from.

Delivery driver's signature: _____

METHODS OF SAMPLINGB AND TESTING
MT 409-12
METHOD OF ACCEPTANCE FOR WELDED STUD SHEAR CONNECTORS
(MONTANA METHOD)

THIS PROCEDURE IS IN DEVELOPMENT

METHODS OF SAMPLING AND TESTING
MT 410-04
METHOD OF INSPECTION, SAMPLING, TESTING, AND ACCEPTANCE OF PAINT, EPOXY AND THERMOPLASTIC PAVEMENT MARKING MATERIAL
(Montana Method)

1 Scope:

1.1 This procedure describes the inspection, sampling, testing and acceptance of construction and maintenance traffic line paint, structural steel primers and finish coats delivered to construction and maintenance projects.

2 Reference Documents:

2.1 ***ASTM Standards*, *Federal Test Methods Std. 141:***

D-711 No - Pick-up Times for Traffic Paint
D-1640 Drying, Curing, or Film Formation of Organic Coatings at Room Temperature
D-969 Laboratory Determination of Degree of Bleeding of Traffic Paint
D-1210 Fineness of Dispersion of Pigment-Vehicle Systems
D-562 Consistency of Paints Using Stormer Viscometer
D-823 Producing Films of Uniform Thickness of Paint, Varnishes, and Related Products on Test Panels
D-522 Mandrel Bend Test of Attached Organic Coatings
D-1475 Density of Paint, Varnish, Lacquer and Related Products
D-4060 Abrasion Resistance on Organic Coatings by the Tabor Abaser
6192 Federal Test Method Std. No. 141 Method 6192

MT Manual:

MT-601 Montana Test Methods-Methods of Sampling and Testing

3 Sampling:

3.1 Two samples are required for each lot or batch of paint used on a project. Suitable containers for each type of paint are listed below.

3.1.1 Sample Waterborne paints using a clean, one-liter (quart), lined, metal can or plastic “Nalgene” bottle. **Do not use unlined metal containers for Waterborne paint samples.**

3.1.2 Sample Alkyd paints using a clean, one-liter (quart), unlined, metal “Asphalt” sampling can. **Do not use plastic “Nalgene” containers for Alkyd paint samples.**

3.1.3 Sample Epoxy paints using a clean, one-liter (quart), lined or unlined metal can or plastic “Nalgene” container.

3.1.4 Sample Aluminum Mastic paints using a clean, one-liter (quart), unlined metal “Asphalt” can. **Do not use plastic “Nalgene” containers for Aluminum Mastic paint samples.**

3.2 Construction Projects - Project quantities of 19 liters (5 gallons) or less: No field sample required. Attach the label from the paint container to a Miscellaneous Form 46 and submit to the Materials Bureau.

3.3 Construction Projects - Project quantities greater than 19 liters (5 gallons) but less than 95 liters (25 gallons): No field sample is required. Sample if the type or quality is suspect, at the option of the Department. Submit Manufacturer's Certification to the Materials Bureau attached to a Miscellaneous Form 45.

3 Sampling: (continued)

3.4 Construction Projects - Project quantities of 95 liters (25 gallons) or more:

3.4.1 Duplicate, one-liter (quart) samples will be taken from the thoroughly mixed contents of a striping machine or container representing each lot. Both samples will be forwarded to the Materials Bureau for testing with a Miscellaneous Form 45. Acceptance will be based on the test report issued by the Materials Bureau. **CONSTRUCTION PAINT WILL NOT BE PRETESTED AT THE POINT OF MANUFACTURE.**

4 Maintenance Traffic Paint:

4.1 Duplicate one-liter (quart) samples of thoroughly mixed paint per lot or batch will be sampled by the Montana Department of Transportation at the point of manufacture and be forwarded to the Materials Bureau for testing. Acceptance will be based on the test report issued by the Materials Bureau.

4.2 For each paint shipment received, a Field Inspection Report - Miscellaneous Material Form No. 46 shall be prepared and mailed to the Materials Bureau. This report shall indicate the type, quantity, and condition of the paint together with source information (Manufacturer and Lot No., etc.). The label may be taken from the container and attached to the inspection report to transmit the source information.

5 Epoxy Pavement Marking Material:

5.1 Epoxy pigment and catalyst will be sampled separately and submitted in accordance with 3.1.3 and submit to the Materials Bureau for testing. Manufacturer's certification will be attached to a Miscellaneous Form 45 and submitted with the samples.

6 Thermoplastic Pavement Marking Material:

6.1 Thermoplastic will be sampled at the point of application. Approximately ½ kilo (1 pound) of the solid material will be submitted to the Materials Bureau for testing. The inspector will supply sample containers. Manufacturer's certification will be attached to a Miscellaneous Form 45 and submitted with the samples.

7 Testing:

7.1 Test methods used for testing paint shall conform to ASTM, Federal Test Methods Standard No. 141, latest revisions, or tests and methods described below:

7.1.1 Flexibility - Apply the paint to produce a 0.0762 mm (0.003 inch) dry film on a 0.25 mm (0.10") tin panel. Air dry at twenty-five (25) degrees centigrade plus or minus 2 degrees (25 °C ± 2°C) or 77 degrees Fahrenheit plus or minus 4 degrees (77 °F ± 4 °F) for at least four (4) hours and then bend over 6.4 mm (1/4 inch) diameter mandrel. The film shall not crack when subjected to the above prescribed flexibility test.

7.1.2 Adhesion: Prepare the panel as for the flexibility test. Place the panel on a 3.2 mm (1/8 inch) thick rubber pad. Strike a sharp blow with a ball peen hammer to cause an indentation of 1.27 mm to 2.54 mm (0.05 to 0.10 inch). There shall be no cracking, chipping or peeling when subjected to the above-prescribed test.

7.1.3 Skinning: In a 250 ml. paint container (1/2 pint), fill 1/2 full with the paint. Examine after 24 hours for skinning. There shall be no skinning.

7 Testing: (continued)

7.1.4 Settling: Fill a 100 ml. centrifuge tube with paint and revolve for 2 hrs. at a speed producing a centrifugal force of 1,112 Newton (250 pounds). A separation of not more than 12.7 mm (1/2 inch) of the pigment is acceptable. The pigment in the bottom of the tube should be soft and easily dispersed with a spatula.

7.1.5 Abrasion: ASTM D-4060 (Test Method for Epoxy Traffic Paint).

7.1.5.1 Abrasion: Federal Test Method Std. No. 141, Method 6192. Panels may be coated by dipping, spraying or by means of film applicator. Dry at 25 °C ± 2 °C (77 °F ± 4 °F) for 24 hours, cure at 49 °C (120 °F) for 72 hours, cool to room temperature and subject to Tabor Abrasion Test using CS-10 wheels, 1000 gram load per wheel and at least 500 revolutions. The dry film thickness should not be less than 0.003 inches prior to testing. The Department performs this test starting with a wet paint thickness of 0.254 mm ± 0.051 mm (0.010 ± 0.002 inch).

7.1.6 Hiding: Use a Standard Horest Hiding Power Chart. Apply at a rate of 16.26 square meters (175 square feet) per 3.785 liters (one gallon). Visual examination will determine acceptance.

7.1.7 Film Appearance: Visual examination of dry film on tin panel is performed. The paint shall dry to a flat finish.

7.1.8 Light Resistance: Apply a wet film of 0.381 mm (0.012 inches) to two clean 76.2 mm x 127 mm (3x5 inches) tin panels and allow to dry horizontally for twenty-four (24) hours. Expose one (1) of the panels to direct sunlight or to a carbon arc light (no water spray) for a period equivalent to seven (7) hours of direct sunlight. The other panel shall not be exposed. Finally examine both panels and compare for darkening. The yellow paint shall not darken appreciably when subjected to the above-prescribed test.

METHODS OF SAMPLING AND TESTING
MT 412-04
TOPSOIL SAMPLING, SAMPLE PREPARATION AND TESTING

1 Scope:

1.1 It is intended that the procedure for sampling and testing topsoil shall apply (1) only to topsoil that has been imported from another source (other than the project), and (2) to any topsoil intended for use in planting lawns, shrubs, trees or other particular plants which require special soil. It is not necessary to sample or test topsoil (termed salvaging and placing) which has been stripped and is stockpiled for later replacement on median areas, outer separation areas and side slopes of roadway areas.

2 Referenced Documents:

2.1 ***AASHTO:***
T 2 Sampling of Aggregates

3 Sampling Procedures:

3.1 Samples shall be obtained from each kind or type of soil (homogeneous area) Soil types may be identified from visual appearance, present vegetative growth, or soils classification primary group from an Engineering Soil Survey.

3.1.1 Samples of sub-soils may also be taken from borings in conjunction with Engineering Soil Survey.

3.1.2 Samples from stockpiles or from loaded transports may be taken in accordance with procedures outlined in AASHTO T 2.

3.2 Samples from the layer of soil proposed for use as topsoil shall be labled "topsoil". Samples from the layer of soil over which the topsoil is to be placed shall be labeled "subsoil." Insignificantly small, unusual areas may be omitted in sampling.

3.3 A sample shall be a composite of material taken from three sample sites in the following manner:

3.3.1 Dig a V-shaped hole through the thickness of the layer of soil being sampled (if a surface sample) and remove a ½ inch thick slice of soil from one side of it.

3.3.2 Trim off from each side of the slice all but a thin ribbon of soil down the center of the spade face and place this in a clean bucket.

3.3.3 Mix equal size samples representing similar soils thoroughly and keep two pounds for testing.

3.4 The sampler shall identify the samples by number and the location from which they were taken. Observations concerning the soil's apparent ability to support plant growth such as the presence or absence of usual or unusual vegetative types, swamps, rock, salt encrustations, etc., should be noted and recorded with the identification data.

4 Sample Preparation:

4.1 Samples shall be allowed to air dry. Larger stones shall be removed by hand and the remainder sieved through a 10 mesh sieve.

Note - Material larger than the ten mesh shall be weighed as gravel and the percent by weight recorded on form to accompany sample. The minus 10 mesh fraction is retained for the soils test and submitted to the Helena Laboratory.

5 Testing Procedures:

5.1 *Conductivity* - A measured volume of 15 ml. Of soil is placed in a 50 ml. Beaker. To this is added 30 ml. of distilled water. The suspension is allowed to stand about one-half hour, being stirred several times during this period. Conductivity is measured using a pipette cell.

5.2 *Soil ph* - The suspension from conductivity measurement sample is decanted and discarded, saving the sediment for the ph measurement. The ph measurement is taken with a glass electrode ph meter.

6 Reagents:

6.1 *$K_2Cr_2O_7$, 1.0 N* - Dissolve exactly 49.04 grams $K_2Cr_2O_7$ in distilled water and dilute to one liter.

6.2 *$Fe(NH_4)_2(SO_2)$, approximately 0.5 N* - Dissolve 200 grams $FE(NH_4)_2(SO_4)_2$ $6H_2O$ in 800 ml. Distilled water containing 20 ml. H_2SO_4 and dilute to one liter.

6.3 *Ferroin indicator* - 0.025 M solution purchased ready for use.

7 Procedure:

7.1 Place 1 gm of soil in a 250 ml. Erlenmeyer flask. Add 10 ml. Potassium dichromate with an automatic pipette. Add 20 ml. Conc. Sulfuric acid from a burette. Mix and let stand 10 minutes. Dilute with 70 ml. Distilled water added from a burette. Titrate the excess dichromate with ferrous ammonium sulfate. At the end point, the ferroin changes from blue to red. Run a blank using dichromate and acid, but no soil. The blank titration should be between 19.5 and 20.5 ml.

$$\% \text{ O. M.} = \frac{\text{BLANK} - \text{TITRATION}}{3}$$

Note - If the titration is less than 5.0, the soil is re-analyzed using ½ gm. sample and is divided by 1.5.

8 References:

Conductivity and pH: *Montana Agriculture Experiment Station, Plant and Soil Science Department, Circular No. 50 July 1968, Bozeman, MT*

Organic Matter: *Jackson, M.L. , Soil Chemical Analysis. pp. 219-221, Prentiss-Hall, Inc., 1958.*

METHODS OF SAMPLING AND TESTING
MT 413-05
INSPECTION AND TESTING OF FENCING MATERIAL

1 Scope:

1.1 This method is intended to cover the inspection, sampling, and testing of fencing materials.

2 Referenced Documents:

2.1 ***AASHTO:***
M 181 Chain Link Fence
M 279 Metallic-Coated Steel Woven Wire Fence Fabric
M 280 Metallic-Coated (Carbon) Steel Barbed Wire
M 281 Steel Fence Posts and Assemblies, Hot-Wrought

Materials Manual:
MT 404 Method for Inspecting Wood Products

3 General Information:

3.1 Material may be inspected and stored. Acceptable material must be identified by tagging or marking until used.

3.2 Visual inspection of mesh, posts and other parts shall be made for workmanship, dimension, condition of galvanizing and freedom from defects in accordance with specifications. Galvanizing shall be checked for excessive roughness, blisters, sal ammoniac spots, bruises, and flaking. Care and judgment must be exercised in making this inspection. Weave and finish (knuckling or barbed) of mesh shall be checked for compliance with specifications.

3.3 If gates are included in the order the design, general workmanship, dimensions, and condition of galvanizing shall be checked for conformance with specifications and applicable drawings. Welded connections shall be inspected to see that they have been cleaned and re-galvanized or painted with approved paint. Whenever practical, materials used and galvanizing procedure shall be checked for compliance with specifications. Observing the fabrication when feasible will be helpful in this regard.

3.4 Samples shall be submitted to the Materials Bureau accompanied by completed Lab. Form No. 45.

3.5 Upon completion of a project, the Project Manager shall submit a report to the Materials Bureau showing the quantity of each type of material inspected and sampled.

3.6 As a guide to the inspector, all applicable specifications for fencing materials can be found in Montana Standard Specification for Road and Bridge Construction, Section 712.

4 Chain Link Fence:

4.1 Inspect and sample chain link fence according to AASHTO M 181.

5 Woven Wire:

5.1 Inspect and sample woven wire according to AASHTO M 279.

6 Barbed Wire:

6.1 Inspect and sample barbed wire according to AASHTO M 280. The following is provided as a general guide for field personnel:

6.1.1 *Field inspection for General Workmanship:* For the purpose of inspection, a maximum of two spools from the lot shall be inspected for barb length, spacing, overall length, and workmanship. Inspection for barb spacing is normally performed on the outer 25 feet (7.6 m) length of a spool.

Note 1 – Field personnel may measure barb spacing and inspect for general workmanship. When the barb spacing is measured in the field, the results must be forwarded to the Materials Bureau along with samples for physical testing.

6.1.2 *Re-Inspection:* If either of the sample spools fails to meet the requirements for barb length, spacing, overall length, and workmanship, two additional spools shall be selected at random for inspection. If either of these spools fails to meet the requirements, the lot will be rejected.

6.1.3 *Sampling:* For test purposes, select one spool at random from every 50 spools or fraction thereof in a lot, or a total of seven samples, whichever is less. A lot shall consist of all the spools of a single construction (Design Number) of barbed wire delivered at the same time.

6.1.4 *Test Specimens for Physical Testing:* Cut a 4-foot (1.2 m) length of barbed wire from the end of each spool and submit to the Materials Bureau for testing. The specimen(s) will be tested for mass of coating and breaking strength.

6.1.5 *Lot Size for Retests:* If one or more of the individual wire specimens fails, retest the lot. For retest purposes, four additional spools of barbed wire for each 50 spools shall be sampled. The lot size then becomes 50 spools.

7 Hardware for Barbed or Woven Wire:

7.1 *Inspection* - Stay wires, brace wires, tie wires, and wire clamps shall be inspected for gauge, condition of galvanizing and compliance with specifications. Any tendency of coating to flake off when wire is manipulated should be observed and noted.

8 Steel Fence Posts and Assemblies:

8.1 Inspect and sample steel fence posts and assemblies according to AASHTO M 281.

9 Wood Fence Posts:

9.1 Inspect and sample wood fence posts according to MT 404.

METHODS OF SAMPLING AND TESTING
MT 414-09
METHOD OF ACCEPTANCE FOR REINFORCING STEEL

1 Scope:

1.1 The procedure set forth in this method will be followed for the acceptance of all reinforcing steel. The acceptance will be based on certain documents and random sampling.

2 Referenced Documents:

2.1 ***AASHTO:***
M 31 Deformed and Plain Carbon-Steel Bars for Concrete Reinforcement

ASTM:
A 615 Specification for Deformed and Plain Carbon-Steel Bars for Concrete Reinforcement

3 Required Documents:

3.1 For each shipment of reinforcing steel delivered to the project, the contractor shall furnish two copies each of the following documents to the Project Manager:

3.1.1 Shipping invoice that shows the weight of all the steel in the shipment.

Note 1 - In the event the steel does not meet the specification requirements, a copy of the manufacturer's invoiced price per pound for this material must be provided.

3.1.2 A signed and dated contractors Certificate of Compliance (Form 406).

3.2 A shipment shall consist of the entire amount of reinforcing steel in each truckload delivered to the project. When a shipment is made by railroad, each 20 tons or fraction thereof will be considered a shipment.

3.3 The Project Manager will retain one set of the documents shown above for his files. The other set will be forwarded to the Materials Bureau after the Project Manager has indicated on the invoice the method by which the steel was accepted. One of the following statements, together with the Project Manager's signature, will be shown on the invoice sent to Helena:

3.3.1 *"Shipment accepted on Form 46 and Form 406, no sample taken."*

3.3.2 *"Shipment accepted on Form 46 and Form 406 and acceptable test results."*

4 Random Sample Requirement:

4.1 In addition to the required documents, a minimum random sampling procedure will be adopted.

4.2 As shipments of steel arrive on the project, it will be the responsibility of the Project Manager to decide how many samples, if any, he will take and when and where they will be taken. Sampling will be done by the contractor as directed by the Project Manager in accordance with MT-601, using table 1 as a guide to indicate the minimum number of samples to be taken.

4.3 The following are locations in the structure where reinforcing steel samples may be taken, or the remaining portion of the sampled bar may be placed, without adverse effect on the structure. The Bridge Bureau must be contacted if clarification is required on the location of any sample bar.

4 Random Sample Requirement: (continued)

4.3.1 *Footing* - The outermost bar in the mat may be sampled. The portion of the bar remaining shall be centered in the footing and used as is.

4.3.2 *Column* - The bar nearest the centerline of bent at centerline of structure may be sampled. The sample shall be taken from the top end. The remaining portion of the bar may be used as is.

4.3.3 *Slab* - Transverse Steel - Take sample from bar in bottom layer. Center remaining portion of bar between curbs.

4.3.4 *Slab* - Longitudinal Steel - Take sample from any line of bars in bottom of slab adjacent to edge of a beam at the end of slab.

4.3.5 *Curb* - No sample need be taken.

4.3.6 *Bent Cross Beam* - The center bar in bottom layer at bottom of beam may be sampled. Center remaining portion of bar between columns.

4.3.7 *T Type Pier Cap* - The center bar in bottom layer at top of cap may be sampled. Center remaining portion of bar over column.

4.3.8 If re-sampling under paragraph 6.1.1.1 becomes necessary because of a failure, it will be necessary for the contractor to replace the sampled portion plus the required lap length.

4.4 Samples taken will be forwarded immediately to the Materials Bureau for testing in accordance with ASTM A 615 or AASHTO M 31.

4.5 The shipment under test shall be kept separate from the other steel on the project until test results have been received.

4.6 Steel taken for the purpose of sampling may have to be replaced in the structure. When replacement is necessary it shall be done by the contractor at no cost to the State.

5 Domestic Materials:

5.1 No steel will be accepted if it does not comply with Montana Standard Specification for Road and Bridge Construction, Section 106.09.

6 Failing Steel:

6.1 In case there is a failure in any size tested under this random sampling procedure, the steel may be rejected in accordance with 6.1.1 or, a price reduction will be assessed in accordance with 6.1.2.

6.2 The failing steel may be ordered removed and replaced at no cost to the State if either of the two check samples fail as described in paragraph 6.1.1.1, below.

6.3 In the event that a sample of reinforcing steel fails, two additional samples representing the sample that failed may be submitted. Both of the check samples must meet specifications before the shipment will be accepted without price reduction.

6.4 If the Bridge Engineer determines that the steel is usable, a price reduction will be assessed against the contractor. The price reduction will be calculated using the following formula:

$P = A \times B$ where:

6 Failing Steel: (continued)

A = total invoice price of reinforcing steel in the lot.*

B = 10%, 20% or 30% dependent upon departure from specifications. The value to be used shall be determined by the Bridge Engineer.

P = Price reduction for the Lot.

* A lot is defined as all of the bars of one bar number and pattern of deformation contained in an individual shipment.

7 Standard Weights, Diameters and Number Designations:

7.1 The standard weights and diameters of deformed reinforcing bars and their number designations shall be those listed in Table 1.

7.1.1 The three minimum yield levels of bars are: 40,000 psi; 60,000 psi; and 75,000 psi, designated as Grade 40, Grade 60, and Grade 75, respectively.

7.1.2 The nominal dimensions of a deformed bar are equivalent to those of a plain round bar having the same weight per foot as the deformed bar.

7.1.3 Bar numbers are based on the number of eighths of an inch included in the nominal diameter of the bars.

TABLE 1
English Version

Bar Size	Nominal Dia. Inches	Wt. Lb. Per Ft.	Minimum Sampling Frequency per Project
3	.375	.376	No sample for less than 2 tons 1 sample for ea. 5 tons or fraction
4	.500	.668	No sample for less than 5 tons 1 sample for ea. 40 tons or fraction
5	.625	1.043	No sample for less than 5 tons 1 sample for ea. 40 tons or fraction
6	.750	1.502	No sample for less than 5 tons 1 sample for ea. 85 tons or fraction
7	.875	2.044	No sample for less than 5 tons 1 sample for ea. 85 tons or fraction
8	1.000	2.670	No sample for less than 10 tons 1 sample for ea. 150 tons or fraction
9	1.128	3.400	No sample for less than 10 tons 1 sample for ea. 150 tons or fraction
10	1.270	4.303	No sample for less than 10 tons 1 sample for ea. 240 tons or fraction
11	1.410	5.313	No sample for less than 10 tons 1 sample for ea. 240 tons or fraction
14	1.693	7.650	One sample
18	2.257	13.600	One sample

TABLE 1
Metric Version

Bar Size	Nominal Dia. mm	Wt. Kg/m	Minimum Sampling Frequency per Project
10	9.5	0.560	No sample for less than 2 metric tons (t) 1 sample for ea. 5 metric tons (t)or fraction
13	12.7	0.994	No sample for less than 5 metric tons (t) 1 sample for ea. 36 metric tons (t)or fraction
16	15.69	1.552	No sample for less than 5 metric tons (t) 1 sample for ea. 36 metric tons (t)or fraction
19	19.1	2.235	No sample for less than 5 metric tons (t) 1 sample for ea. 77 metric tons (t)or fraction
22	22.2	3.042	No sample for less than 5 metric tons (t) 1 sample for ea. 77 metric tons (t)or fraction
25	25.4	3.973	No sample for less than 9 metric tons (t) 1 sample for ea. 136 metric tons (t)or fraction
29	28.7	5.060	No sample for less than 9 metric tons (t) 1 sample for ea. 136 metric tons (t)or fraction
32	32.3	6.404	No sample for less than 9 metric tons (t) 1 sample for ea. 218 metric tons (t)or fraction
36	35.8	7.907	No sample for less than 9 metric tons (t) 1 sample for ea. 218 metric tons (t)or fraction
43	43.0	11.38	One sample
57	57.3	20.24	One sample

METHODS OF SAMPLING AND TESTING
MT 415-12
METHOD OF ACCEPTANCE FOR STRUCTURAL STEEL

THIS PROCEDURE IS IN DEVELOPMENT

METHODS OF SAMPLINGB AND TESTING
MT 418-04
METHOD OF ACCEPTANCE FOR MISECLLANEOUS WELDED ITEMS
(MONTANA METHOD)

1 Scope:

1.1 This method is intended as a guide for the acceptance of miscellaneous, low stress carrying welded items. It does not cover any welding in connection with bridge related items.

2 Referenced Documents:

2.1 Montana Department of Transportation Detailed Drawings

3 Field Welding Acceptance:

3.1 The low stress carrying members listed in 3.1.1, 3.1.2, and 3.1.3 below can be approved by the field provided the welding has been done by a qualified welder in accordance with AWS D1.1 Current edition, Limited Thickness. In the event that field welding is necessary, contact the Bridge Bureau for welder qualification tests.

3.1.1 Trash guard racks (MDT Detailed Drawing No. 615-02) and median inlet covers (MDT Detailed Drawing No. 604-00).

3.1.2 Guardrail terminal section anchor plates (MDT Detailed Drawing No. 606-86).

3.1.3 Ladders, stairways, scale pit angles, grates, and miscellaneous items associated with weigh stations, rest areas, and observation points.

4 Acceptance Procedure:

4.1 The procedure listed in 4.1.1, 4.1.2, 4.1.3, and 4.1.4 below must be followed for the acceptance of welded items covered in this method.

4.1.1 A copy of the mill test results must accompany the material.

4.1.2 A copy of the welder qualification form or other verification must accompany the material.

4.1.3 The items must be visually inspected and the welds examined for appearance, size, undercut, and porosity.

4.1.4 Items 4.1.1 and 4.1.2 must be attached to the visual inspection report and submitted in the usual manner.

METHOD OF SAMPLING AND TESTING
MT 420-04
PROCEDURE TO CHECK FOR LEAKS UNDER HYDROSTATIC PRESSURE

1 Scope:

1.1 This procedure is used to determine the degree of water tightness for corrugated metal irrigation or siphon pipe and couplers. This test is customarily performed at the fabrication plant, but can also be performed in the field.

2 Apparatus and Equipment:

2.1 Bulkheads shall consist of the following:

2.1.1 A two-foot section of corrugated steel pipe of the specific diameter to be tested. Pipe sections with helical corrugations shall be re-rolled at the outer ends to form at least two corrugations to fully accommodate band couplers.

2.1.2 Two squares pieces of 1/8 inch thick steel plate, with a dimension four inches greater than the diameter of the pipes to be tested.

2.1.3 Four lengths of 2 inch x 2 inch x ¼ inch steel angles to be used as braces with a length equal to the dimension of the plates.

2.1.4 One – 3 inch galvanized steel elbow.

2.1.5 One – 3 inch galvanized cap with a ¾ inch threaded hole at center.

2.1.6 One – ¾ inch, or longer, gate valve to accommodate a water hose.

2.1.7 Two full length section of culvert.

2.1.8 Three approved band couplers with appropriate gaskets.

2.1.9 2 inch x 4 inch wood bracing blocks 3 feet in length.

2.2 The bulkheads consist of two 2-foot sections of corrugated steel pipe, of the diameter of the pipe to be tested, to which a braced 1/8 inch square plate has been welded to one end. One bulkhead is fitted with a 3 inch galvanized elbow. The elbow is welded vertically to the top of the plate. The horizontal leg of the elbow must be located directly below the trough of the culvert corrugation to prevent air entrapment (See fig. 1**).**

2.3 A 3 inch removable, galvanized filler cap with ¾ inch dia. hole at center is to accommodate a standpipe for observing the static pressure head applied (see fig. 1 & fig. 2)**.**

2.4 A ¾ inch dia. Gate valve is to accommodate the pressurized hose attached to the bottom of the steel back plate. This valve is to provide a constant head of water in the stand pipe during the tests and also to serve as a drain after testing is completed (see fig. 1)**.**

2.5 The <u>stand pipe</u> shall consist of the following:

2.5.1 Four – 5 foot sections of ¾ inch galvanized pipe.

2.5.2 Three – ¾ inch galvanized tees.

2.5.3 Three – ¾ inch galvanized plugs.

2.5.4 One – 8 inch funnel.

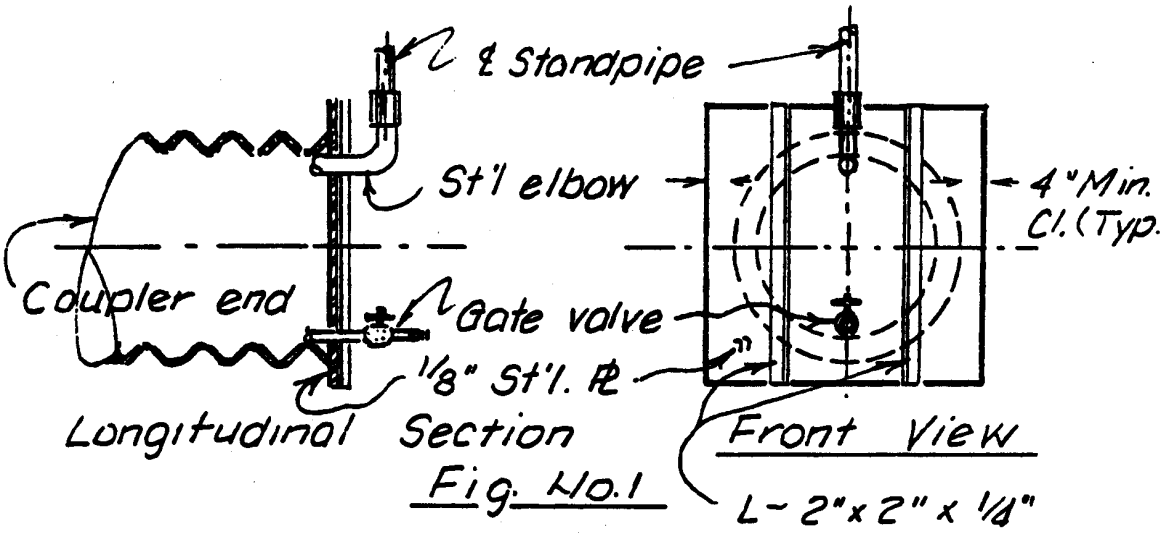

Fig. No.1

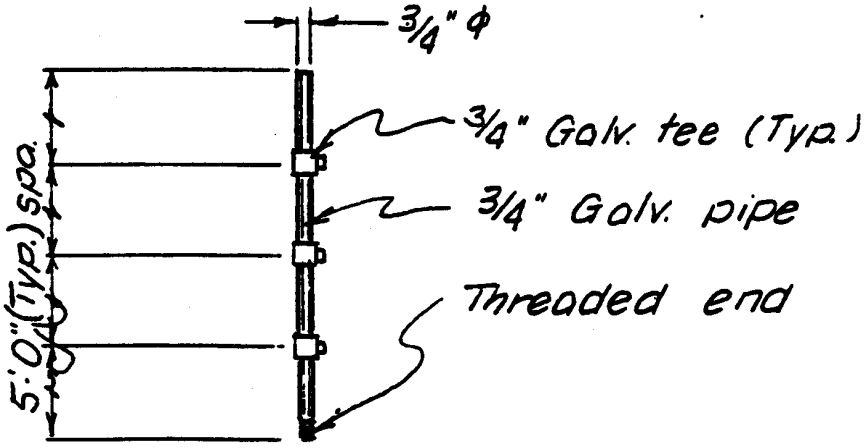

Standpipe Assembly
Fig. No.2

3 Procedure:

3.1 After attaching the bulkheads to the culvert test sections, the sections are coupled together, braced at the center to prevent sagging, and are filled to capacity with water.

3.2 The 20 foot stand pipe (fig. 2) is assembled and attached to the 3 inch elbow filler cap.

3.3 Water is introduced into the stand pipe from the bottom by means of the gate valve.

3.4 With water flowing continuously out of the first or bottom tee, and after waiting for a period of five minutes, a close examination is made of the test section for evidence of leakage.

3.5 The tee is plugged and the process repeated at each five foot increment until water flows out of the top of the stand pipe, the maximum twenty foot head.

3.6 A slight indication of “sweating” or “seepage ‘ at the test seams is permissible for irrigation pipe. Dripping or free flow of water is not acceptable. No sweating or other seepage for siphon pipe applications is permissible. If only the pipe seams are being tested but not the bands, some leakage at the bands may be allowed.

4 Frequency of Test:

4.1 Each diameter of pipe at least once a year at the discretion of the inspector.

METHODS OF SAMPLING AND TESTING
MT 421-09
METHOD OF SAMPLING GEOSYNTHETICS (Construction Fabric and Geogrid)

1 Scope:

1.1 This method covers the sampling of Geosynthetics. Geosynthetics generally fall into one of the following catagories; woven and non-woven Geotextiles, Geogrids, Geocomposites, Geomembranes and Geosynthetic Clay Liner (GCL).

2 Description:

2.1 *Geotextiles* are permeable materials comprised of fibers or yarns combined into planar textile structures. The majority are either woven or non-woven (as described below) and are used for strength, separation, drainage, filtrationand erosion control purposes.

Woven – Geotextile that are typically made of monofilament, multifilament or fibrillated yarns.

Non-woven – Geotextile that is manufactured using a process in which synthetic polymer fibers are continuously extruded and spun. The fibers or filaments are then connected by needle punching or heat bonding.

2.2 *Geogrid* consists of polymer mats constructed either of coated yarns or punched and stretched polymer sheets that allow interlocking of surrounding geomaterials and are commonly used for soil reinforcement.

2.3 *Geocomposites* generally consist of a geonet or a cuspated or dimpled polyethylene drainage core wrapped in a geotextile and are often used as edge drains, wall drains, vertical drains (wick drains), and sheet drains.

2.4 *Geomembranes* consist of impervious polymer sheets that are typically used to line ponds, ditches, and landfills.

2.5 *Geosynthetic Clay Liners (GCL)* are manufactured hydraulic barriers consisting of sodium bentonite clay sandwiched and binded between two geotextiles or attached with an adhesive to a geomembrane. Overlaps self-seal when the sodium bentonite hydrates. GCL's are commonly used to control vertical or horizontal infiltration of moisture.

3 Referenced Documents:

3.1 ***AASHTO:***
M288 – Geotextile Specification for Highway Applications

ASTM:
D4354 – Sampling of Geosynthetics for Testing

MT Geotechnical Manual

4 Sample:

4.1 Prior to installation of the geosynthetic the following requirements are necessary to insure proper selection for each type of application:

4.1.1 The contractor shall submit to the EPM two copies of a notarized manufacturer's certificate of compliance signed by a legally authorized official of the manufacturer and notarized. The

4 Sample: (continued)

certification shall represent physical and chemical test results that were performed on a representative lot of material being used by the department.

4.1.2 In addition to certifications, a sample for Acceptance testing is required.

4.1.3 All sampling of geosynthetics,will be done at the project and witnessed by the EPM or his designee, for each type of application, i.e., geotextiles: separation, stabilization, subsurface drainage (Class A, B, or C) permanent erosion control (Class A, B, or C), silt fence (stabilized or unstabilized), geogrids, geocomposites GCL"s and geomembranes. Compare the manufacturer's certificate of compliance to the specifications for the proposed application to ensure product compliance prior to acceptance and installation. Submit samples with certifications to the Materials Bureau for testing.

4.1.4 The size of sample for each application will be a minimum 4 foot wide strip cut across the full roll taken from a wrap of geosynthetic not exposed to sunlight or abrasion (see Note 1).

4.1.5 Frequency of sampling shall be one sample for every 10,000 square yards (8,000 m^2) of application.

4.1.5.1 Each new roll used will be checked for variance of lot number and then, if necessary, resampled and submitted to the Materials Bureau for testing. (See Note 2)

4.1.5.2 The direction of roll must be identified on the sample.

Note 1 - The sample must be cut so that the cut edge is <u>perpendicular</u> to the roll (machine) direction. It is important to identify the roll direction on the sample, as the direction of failure in the fabric must be identified.

Note 2 - Label the sample with the manufacturer's lot number and identification of fabric type, grade or product name, date of sampling, project number and sample number.

5 Shipment and Storage:

5.1 Each geosynthetic roll shall be wrapped with a material that will protect the geosynthetic, including the ends of the roll, from damage due to shipment, direct sunlight, ultra-violet radiation and contaminants. The protective material shall be maintained during shipping and storage.

5.2 During storage, geosynthetic rolls shall be elevated off of the ground and adequately covered to protect them form the following: site construction damage, precipitation, extended ultraviolet radiation including sunlight, chemicals that are strong acids or bases, flames including welding sparks, temperatures in excess of 160° F (71° C), and other environmental conditions that may damage the physical properties of the geosynthetic.

6 Specifications:

6.1 For basis of acceptance and testing requirements refer to the Standard Specifications for Road and Bridge Construction. Since the Materials Bureau has a strict acceptance policy, proper sampling and correct submittal is essential.

METHODS OF SAMPLING AND TESTING
MT 422-12
METHOD OF TEST FOR SURFACE SMOOTHNESS AND PROFILE

1 Scope:

1.1 This method covers the testing of a finished flexible pavement surface for smoothness and profile. The surface smoothness is expressed in International Roughness Index (IRI) in units of inches per mile. The surface profile is generated to locate variations in profile (e.g., bumps or dips). This method is not intended to be used with rigid pavement or gravel surfacing.

2 Reference Documents:

2.1 Operator's Manual, Surface Systems & Instruments, LLC
Profiler Operations Manual (POM) for MDT Profilers (most recent version)
MDT QC/QA Plan (most recent version)

3 Terminology:

3.1 International Roughness Index (IRI) – An index resulting from a mathematical simulation of vehicular response to the longitudinal profile of a pavement using a 'quarter-car' simulation model as described in NCHRP Report 228.

4 Apparatus:

4.1 Class I laser road profiler as defined in ASTM E950. The road profiling system is mounted on a vehicle, usually a van or truck. It consists of the following components:

4.1.1 Vertical, non-contact, height measurement systems (i.e., laser) capable of measuring the height from the mounted sensor face to the surface of the pavement.

4.1.2 A linear distance measuring system (i.e., DMI) capable of measuring distance traveled.

4.1.3 An inertial referencing system (i.e., accelerometers) capable of measuring the movement of the vehicle as it traverses the pavement.

5 Software:

5.1 The software must activate the testing using parameters (i.e., data collection initiation) that are stored by the control setup.

5.2 The software must receive, display, and store raw data received from the profiler.

5.3 The software must be capable of accumulating desired output and printing results.

6 Calibration:

6.1 Perform a comprehensive calibration and sensor check at thirty (30) day intervals during construction season. Check the DMI and verify Laser each day before use.

6.2 Calibration is used to establish and adjust the operating characteristics of the SSI system. There are five (5) items that will either be calibrated or checked: laser height, distance measuring device, tire pressure, Accelerometer and Bounce Test.

6.3 Check tire pressure and inflate to manufacturer's recommended psi. Special care should be given to the tire on which the DMI device is mounted.

6 Calibration: (continued)

6.4 Laser Height Verification

6.4.1 The lasers have been calibrated at the factory. The lasers can only be verified.

6.4.2 A verification check of the laser will be performed each day before use.

6.4.3 A full verification check of the laser sensors must also be performed whenever problems are suspected, or when a sensor is repaired or replaced.

6.5 Facility for Laser Height Verification

6.5.1 Each MDT District should have a facility available (e.g.; enclosed garage at District).

6.5.2 Facility should have a level surface and be free of vibration.

6.6 Procedure for Laser Height Verification

6.6.1 Verify laser height in accordance with section 3.3 (pages 15-16) of the SSI Operations Manual.

6.7 Accelerometers

6.7.1 Accelerometers need an occasional static verification. Perform static verification (1) every 30 days during times when the system is used frequently, (2) after any prolonged period that the system has not been used, (3) when repairs are performed on the accelerometer(s) or associated system, or (4) any time the system is generating data that appears erroneous or suspect.

6.8 Facility for Accelerometer Verification

6.8.1 Each MDT District should have a facility available (e.g.; enclosed Garage at District).

6.8.2 Facility should have a level surface and be free of vibration.

6.9 Procedure for Accelerometer Verification

6.9.1 Perform the Accelerometer verification as per section 3.6 (page 21) of the SSI Operations Manual.

6.10 Bounce Test

6.10.1 The bounce test is a controlled-conditions procedure that uses the profiler's built-in simulation capabilities to test that the profiling system is operating properly. Perform the bounce test (1) every 30 days during times when the system is used frequently, (2) after any prolonged period that the system has not been used, (3) when repairs are performed on the associated system, or (4) any time the system is generating data that appears erroneous or suspect.

6.11 Facility for Bounce Test

6.11.1 Each MDT District should have a facility available (e.g.; enclosed garage at District).

6.11.2 Facility should have a level surface and be free of vibration.

6.12 Procedure for Bounce Test

6.12.1 Perform the Bounce Test as per sections 3.4 and 3.5 (page 17) of the SSI Operations Manual.

6.13 Distance Measuring Instrument (DMI)

6.13.1 Calibrate DMI whenever problems are suspected, the tires are replaced, suspension repairs are performed, wheels are rotated/ aligned, or repairs are performed on the DMI.

6.14 DMI Calibration Site

6.14.1 Each MDT District should have a calibration site established.

6.14.2 This site should be located on a straight portion of roadway that is reasonably level and has low traffic volume.

6.14.3 The site should be measured with a standard surveying tape or wheel (using standard surveying procedures), or laid out using an electronic distance measuring system.

6.15 Procedure for DMI Calibration

6.15.1 Calibrate the Distance Measuring Instrument (DMI) as per section 3.2 (pages 14-15) of the SSI Operations Manual.

6.16 Record Keeping

6.16.1 SSI software has a Calibration/Verification Report that Tracks DMI Calibration and Accelerometer Verification dates. That report may be printed from any Data Analysis files you may have. A simple record of all calibrations and verifications can be kept with the machine as per attached.
(SEE "Calibration and Run Information" form)

7 Project Testing:

7.1 Preparation of Surface

7.1.1 Test the roadway only when it is free of moisture and any deleterious material that will not provide accurate test results.

7.1.2 The Contractor is responsible for all work to prepare the roadway for testing, such as, but not limited to sweeping off of debris.

7.1.3 Do not conduct testing while it is raining or under other weather conditions determined inclement by the Engineering Project Manager (EPM).

7.2 Project Setup

7.2.1 Engineering Project Manager (EPM) or one of his/her representatives will meet with the Contractor and identify the Beginning-of-Project (BOP), the End-of-Project (EOP), and all excluded areas (e.g., bridges not paved, curves with short radii).

7.2.2 If possible, project should be marked for testing using reflective tape or reflective traffic cones. This is the preferred method. There are two other acceptable methods: back-up to start or manual.

7.2.3 If it is not feasible to use the photocell to initiate and stop data collection, data collection can be initiated and stopped manually. When manually initiating and stopping profile data collection, cones should be placed at the beginning and end of the project to be used as reference points by the operator.

7.3 Profiler Operations

7.3.1 Operation of profiler should be consistent with guidelines discussed in the latest version of the SSI Profiler Operations Manual. This includes but is not limited to the following:

- Run in English unit system.
- If possible, initiate data collection via reflective surface and photocell.
- Use approved file naming convention. (Contract#_Lane Direction_Lane_Run#) example 09610_NB_DR_Run1
- Document any issues that occurred during testing.
- Process data with software.
- Properly backup data.
- Provide report to EPM or one of his/her representatives.

7.3.2 MDT collects two comparable runs.

- Once the operator is confident that a minimum of two comparable runs have been obtained, the Quality Control Review and Bump Reports are used to evaluate their acceptability. Profiler runs should satisfy the following criteria:
- The average IRI values at each 1 mi (1.61 km) interval for each of the two runs are within ± 5.7% of the mean IRI of both runs.
- If spikes (e.g., unusually high IRI) are present in the data, the operator should determine if spikes are pavement related or the result of equipment or operator error. The operator should examine the profile bump reports for discrepancies and features that cannot be explained by observed pavement features.
- Rerun the entire project if any one mile section does not match within the 5.7% tolerance established in 7.3.2.1.1 and compare that run to the previous runs.
- Use the results of the two runs that compare for project acceptance.
- If the third run does not compare to either of the first two runs, recheck all calibrations and then rerun the entire project and compare the results to the previous runs. Use the two runs that compare favorably.

7.4 Testing Results

7.4.1 Results shall be provided to EPM or one of his/her representatives and shall be processed into desired segments (e.g., 0.5 miles) as described in the contract Ride Specification.

7.4.2 A Roughness Report will be generated for the first profile run deemed to be within the comparison values for each lane profiled. This report will contain the IRI values for the left and right wheel paths. These IRI values will be applied to the most recent pay incentives/disincentives as described in Ride Specification.

7.4 Testing Results: (continued)

7.4.3 A Bump Report will be generated for the first profile run deemed to be error free for each lane profiled. The Bump Report will indicate the locations of potential defects. These will be reviewed with the EPM. Location should be physically examined to determine if, at the EPM's discretion, the location should be considered a defect.

CURRENT DATE OF REVISION
MT 500 SECTION
CHEMISTRY

Test Method No.	Title	Pages	Date of Publication or Revision
MT 501	pH, Insoluble Materials, Corrosion Rate, Percent Settleable Solids and Percent Passing a #10 Sieve of Brine Materials	1 pp.	Jun 2016
MT 502	Elemental Chemical Analysis Of Brine Materials	7 pp.	Sep 2016
MT 503	Vacant		
MT 504	Cyanide In Brine Material		Under Development
MT 505	Vacant		
MT 506	Vacant		
MT 507	Vacant		
MT 508	Vacant		
MT 509	Vacant		
MT 510	Vacant		
MT 511	Vacant		
MT 512	Vacant		
MT 513	Vacant		
MT 514	Vacant		
MT 515	Vacant		
MT 516	Vacant		
MT 517	Vacant		
MT 518	Vacant		
MT 519	Vacant		
MT 520	Determination of Wear Metals in Engine Oil		Under Development
MT 521	Determination of Red Dye #26 in Diesel Fuel	1 pp.	Sep 2016
MT 522	Vacant		
MT 523	Vacant		
MT 524	Vacant		
MT 525	Vacant		
MT 526	Moisture Analysis of PNS Category 8A, 8B, and 8C Solid Sodium Chloride	2 pp.	Jun 2016
MT 527	Vacant		
MT 528	Vacant		
MT 529	Vacant		

CURRENT DATE OF REVISION
MT 500 SECTION
CHEMISTRY

Test Method No.	Title	Pages	Date of Publication or Revision
MT 530	Determination of Chloride in Bridge Deck Cement by Ion Chromatography.		Under Development
MT 531	Vacant		
MT 532	Vacant		
MT 533	Chemical Analysis of Fly Ash and Pozzolans	9 pp.	Sep 2016
MT 534	Chemical Analysis of Portland Cement	8 pp.	Jun 2016
MT 535	Bridge Deck Crack Sealant IR Test		Under Development
MT 536	Chemical Analysis of Silica Fume	1 pp.	Jun 2016
MT 537	Chemical Analysis of Ground Granulated Blast-Furnace Slag (GGBFS)	4 pp.	Sep 2016
MT 538	Chemical Analysis of Blended Cement		Under Development
MT 539	Vacant		
MT 540	Vacant		
MT 541	Vacant		
MT 542	Vacant		
MT 543	Vacant		
MT 544	Vacant		
MT 545	Vacant		
MT 546	Vacant		
MT 547	Vacant		
MT 548	Analysis of Traffic Paint	7 pp.	Jun 2016

METHODS OF SAMPLING AND TESTING
MT 501-16
pH, INSOLUBLE MATERIAL, CORROSION RATE, PERCENT SETTLEABLE SOLIDS AND PERCENT PASSING A # 10 SIEVE OF BRINE MATERIALS
(*Montana Method*)

MT 501 is identical to the 2010 Pacific Northwest Snowfighters Snow and Ice Control Chemical Products Specifications and Test Protocols for the PNS Association of British Columbia, Colorado, Idaho, Montana and Washington (http://pnsassociation.org/wp-content/uploads/PNSSPECS.pdf) except for the following stipulations:

Test Method C

1 Perform a prescreening procedure for the Percent Total Settleable Solids methods.

1.1 Pour a well-mixed sample into a 50 ml conical bottom disposable vial to the 50 ml mark. Cap vial. Repeat for all samples. Place the vials in a freezer at the test temperature designated below for 168 hours:

- Sodium Chloride: -17.8°C ± 1°C (0°F ± 2°F)
- Magnesium Chloride: -17.8°C ± 1°C (0°F ± 2°F)
- Calcium Chloride: -29°C ± 1°C (-20°F ± 2°F)

Note 1 – Ensure the samples remain free from agitation or disturbance during the entire testing duration.

1.2 At the end of the testing time (168 hours), observe samples. If any noticeable hardening or crystallization of the deicer is observed, then perform additional testing in accordance with PNS Test Method C. If the sample does not exhibit hardening or crystalizing the sample passes the test.

2 Report

2.1 Report settleable solids as a (V/V) percent ±0.1% in Site Manager.

2.2 Report solids passing through a number 10 sieve as a (V/V) percent ±0.1% in Site Manager.

METHODS OF SAMPLING AND TESTING
MT 502-16
ELEMENTAL CHEMICAL ANALYSIS OF BRINE MATERIALS
(*Montana Method*)

1 Scope

1.1 This test method describes the procedures used to analyze brine materials for the following analytes: arsenic (As), barium (Ba), cadmium (Cd), chromium (Cr), copper (Cu), phosphorus (P), lead (Pb), mercury (Hg), selenium (Se), and zinc (Zn) in brine materials. Additionally the samples are analyzed for magnesium (Mg), sodium (Na), and sulfur (S) to determine the percentage of magnesium chloride, sodium chloride, and sulfates in the samples.

1.2 This standard involves hazardous materials, operations, and equipment. This standard does not purport to address all of the safety concerns associated with its use. It is the responsibility of the user of this procedure to establish appropriate safety and health practices and to determine the applicability of regulatory limitations prior to use.

2 Referenced Documents

Milestone
Milestone Grease Digestion Application Note HPR-CH-16

3 Summary of Test Method

3.1 Samples are prepared using a microwave digestion technique based on Milestone Grease Digestion Application Note HPR-CH-16. Mercury is analyzed using a cold vapor technique with a vapor generation assembly (VGA) attached to a flame atomic absorption spectrometer (FAAS). All other analytes are analyzed using a inductively coupled plasma – optical emission spectrometer (ICP-OES).

4 Significance and Use

4.1 This procedure is primarily used to provide quality assurance and control for deicer materials and dust palliatives.

5 Apparatus

5.1 *Analytical Balance* – with a precision of 0.0001 g

5.2 *Microwave digestion system* – Capable of heating samples to 200°C and maintaining that temperature for at least 30 minutes. The system must use sealable vessels that prevent the escape of vapors.

5.3 *ICP-OES* – Capable of measuring analytes of interest at parts per million (ppm) levels and low parts per billion (ppb) levels

5.4 *Flame Atomic Absorption Spectrometer (FAAS)* – Equipped with a hollow cathode lamp (HCL) for measuring Hg and capable of operating with an attached VGA

5.5 *Vapor Generation Assembly (VGA)* – Capable of cold vapor techniques for detecting mercury at low ppb to high parts per trillion (ppt) levels

5.6 *Labware* – Glassware, Teflon, and Plasticware containers that have been properly cleaned and stored filled with dilute nitric acid solution (1 – 5%) for at least 2 days.

6 Reagents and Materials

6.1 Trace metal grade (TMG) hydrochloric acid (HCl), concentration of 32-38%

6.2 TMG nitric acid (HNO_3), concentration of 65-70%

6.3 Technical grade hydrogen peroxide (H_2O_2), concentration of 34-37%

6.4 Stannous chloride solution - 10% stannous chloride ($SnCl_2$) w/v and 20% TMG hydrochloric acid

6.5 1+1 hydrochloric acid – Made with TMG HCl (e.g., Add 500 ml TMG HCl to 400 ml reagent water and dilute to 1 L).

6.6 Reagent Water – Purified with a polishing system such that ASTM Type II water or better is obtained.

7 Calibration and Standardization

Follow manufacturer's specifications for calibrating and standardizing the ICP-OES and VGA. Appendix A provides calibrating and standardizing specifications for a Varian Axial View ICP-OES, an Agilent Radial View ICP-OES, and Varian VGA.

8 Procedure

8.1 Tare a clean microwave digestion vessel on the analytical balance. Use a transfer pipet to dispense a portion of the sample into a digestion vessel in accordance with the table below. Record the mass.

Material Being Analyzed	Amount of material (grams)
Corrosion Inhibitor	1.2
Sodium Chloride Magnesium Chloride Calcium Chloride	7.5

Note 1 – Use a small weighing dish in place of a microwave digestion vessel when static electricity prevents a stable measurement. Transfer contents to a microwave digestion vessel; use a small amount of water to rinse the contents of the weighing dish.

8.2 In a ventilation hood, add 1 mL of hydrogen peroxide and 9 mL of nitric acid to each of the digestion vessels. Assemble the digestion vessels and all other components required for proper microwave digestion in accordance with the manufacturer's instructions and then run the digestion program. MDT's parameters for a Milestone Ethos EZ microwave digestion system are in Appendix A.

8.3 After completion of the digestion program, allow the carousel to cool before removing. The carousel may be left overnight to cool.

8.4 Remove a digestion vessel and open it. Rinse the sample into a clean Teflon beaker or other suitable cleaned container. Tare an appropriate storage container on the analytical balance. Rinse the sample into the storage container. Place the storage container back onto the analytical balance and dilute with reagent water until a mass of 100.00 g ± 0.05. Record the mass to nearest 0.01 g. Repeat for all samples.

8.5 Label the sample bottles with the sample number, date, analyst initials, and as Brine Material stock solution.

8.6 Dilute the stock solutions with reagent water for the analysis of Mg, Na, and S to 1:100 by weight. Label the dilute samples with the sample number, date, analyst initials, and as Brine Material dilute solution.

8.7 Analyze the stock and dilute samples on the radial view ICP-OES, axial view ICP-OES, and VGA with FAAS, as appropriate.

9 Calculation or Interpretation of Results

9.1 Concentration Calculations

9.1.1 As, Ba, Cd, Cr, Cu, P, Pb, Se, and Zn (measured in mg/kg by the ICP-OES)

Sample concentration is calculated by multiplying the measured value by a ratio of the solution weight divided by the sample weight.

$$C = DM(\frac{L}{S})$$

Where:

C = sample concentration (mg/kg)

M = measured value (µg/kg)

L = solution mass

S = sample mass

D = dilution factor that is equal to 1 for final products or is equal to 100%/P where P is the percentage of the component of interest in the final product

Note – Concentration calculations for corrosion inhibitors requires the inclusion of a dilution factor based on the amount of inhibitor used in the product.

9.1.2 Hg (measured in µg/kg by the VGA)

Mercury concentration is calculated by multiplying the measured value by a ratio of the solution mass divided by the sample mass then divided by 1000.

$$C = \frac{ML}{1000S}$$

Where:

C = sample concentration in mg/kg

M = measured value in µg/kg

L = solution mass

S = sample mass

9.2 Percent Weight Calculations

$$P = \frac{LMNO}{10000STU}$$

Where:

P = percent weight of the desired compound

L = mass of the first solution

M = measured value of the analyte in mg/kg

N = mass of the second solution

O = molecular mass of the desired compound

S = sample mass

T = mass of the aliquot from the first solution

U = atomic mass of the measured analyte.

Elements and molecules	Atomic mass	Molecular mass
Na	22.99	
NaCl		58.44
Mg	24.31	
$MgCl_2$		95.21
S	32.066	
SO_4		96.066

10 Report

10.1 Elements As, Ba, Cd, Cr, Cu, Hg, P, Pb, Se, and Zn – report as mg/kg

10.2 $MgCl_2$, NaCl, and SO_4 – report as percent by weight of the product

APPENDIX A
ANALYTICAL INSTRUMENTATION CALIBRATION

Milestone Ethos EZ microwave digestion system

Digestion program used: motoroil.mpr

Heat and time: Heat to 200°C and hold temperature during a 30 minute interval. Follow by a 10 minute cooling period.

Rotor: SK-10

Varian Axial View ICP-OES configuration parameters for brines and non-inhibitors

Equipment Configuration

a. Nebulizer: Sea Spray
b. Spray chamber: cyclonic
c. Sample pump tubing: White/White
d. Waste pump tubing: Blue/Blue
e. Rinse Solution: 3% Nitric Acid
f. Torch: High solids with sheath gas
g. Sheath gas: Argon at 10mL/min
h. Power: 1.20 kW
i. Plasma flow: 15.0 L/min
j. Auxiliary flow: 1.50 L/min
k. Nebulizer flow: 0.70 L/min for $MgCl_2$ brines 0.80 L/min for NaCl brines
l. Replicate Read time: 10.00 s
m. Instrument stabilization delay: 15.00s
n. Sample uptake delay: 30.00s
o. Pump rate: 15 rpm
p. Rinse time: 100s
q. Fast pump: yes
r. Replicates: 3

Line Selection for Standard, Samples, and Blanks:

a. As 193.696
b. Ba 233.527
c. Cd 214.439
d. Cr 267.716
e. Cu 324.754
f. P 213.618
g. Pb 220.353
h. Se 196.026
i. Zn 213.857

Calibration Varian Axial ICP-OES

a. Type: Linear for all elements
b. Linear-Maximum percent error of 5% except Cd that can be 15% and confidence limit of 0.99%
c. Calibration standards: Prepare calibration standards and blanks so that the sample matrices are being mimicked by compensating for the content of acids and salts. Prepare a total of one standard blank and three standards with varying concentrations of each desired analyte.

Agilent Radial View ICP-OES configuration parameters for brines and inhibitors

Equipment configuration

a. Nebulizer: One Neb
b. Spray chamber: cyclonic
c. Sample pump tubing: White/White
d. Waste pump tubing: Blue/Blue
e. Rinse solution: 3% Nitric acid
f. Torch: High solids
g. Power: 1.15 kW $MgCl_2$ brines, 1.20 kW NaCl brines, and 1.10 kW for inhibitors.
h. Plasma flow: 15.00 L/min
i. Auxiliary flow: 1.50 L/min
j. Nebulizer flow: 0.80 L/min $MgCl_2$ brines, 0.75 L/min NaCl brines, and 0.70 L/min for inhibitors.
k. Viewing height: 11 mm $MgCl_2$ brines, 12 mm NaCl brines, and 9 mm for inhibitors.
l. Replicate read time: 10.00s
m. Instrument stabilization delay: 15s
n. Sample uptake delay: 30s
o. Pump rate: 15s
p. Rinse rate: 10s
q. Fast pump: yes
r. Replicates: 3

Line selection for standards, samples and blanks:

$MgCl_2$ brines

a. Mg 280.270
b. Na 589.592
c. S 181.972

NaCl brines

a. Na 589.592

Corrosion Inhibitors

b. As 188.980
c. Ba 455.403
d. Cd 226.502
e. Cr 205.560
f. Cu 324.754
g. P 213.618
h. Pb 220.353
i. Se 196.026
j. Zn 213.857

Calibration Agilent Radial ICP-OES

a. Type: Linear for all elements
b. Linear-Maximum percent error of 5% and confidence limit of 0.99%.
c. Calibration standards: Prepare calibration standards and blanks so that the inhibitor sample matrices are being mimicked by compensating for the acids and inhibitor components. For the brines only compensate for the acid content. Prepare a total of one standard blank and three standards with varying concentrations of each desired analyte.

Varian AA 240FS and VGA configuration parameters

Equipment configuration

a. Measurement time: 10.00s
b. Read delay: 115s
c. Sample tubing: Purple/black
d. Acid and reductant tubing: black/black
e. Replicates standards: 3
f. Replicates samples: 3
g. Precision % standards: 1.0
h. Precision % samples: 1.0
i. Lamp Current: Recommended current on Hg lamp
j. Slit width: 0.5R nm
k. Reslope rate: 50
l. Reslope standard: number 2

Wavelength selection for standards, samples, and blanks

a. 253.7 nm

Calibration Varian AA 240FS and VGA

a. Type: Linear
b. Calibration standards: Prepare calibration standards and blanks so that the acid content of the sample matrices are mimicked. Prepare a total of one standard blank and three standards with varying concentrations of each desired analyte.

Reagents

a. Acid: Described in 6.5
b. Reductant: Described in 6.4

METHODS OF SAMPLING AND TESTING
MT 504-16
CYANIDE IN BRINE MATERIAL

THIS PROCEDURE IS IN DEVELOPMENT

METHODS OF SAMPLING AND TESTING
MT 520-12
DETERMINATION OF WEAR METALS IN ENGINE OIL

THIS PROCEDURE IS IN DEVELOPMENT

METHODS OF SAMPLING AND TESTING
MT 521-16
METHOD OF TESTING DYED DIESEL
(*Modified ASTM D6258*)

MT 521 is identical to ASTM D6258 except for the following stipulations:

1. Add the following to Section 9.2.1:

Volume of Stock Standard/100 ml	Approximate Concentration of Working Standards
6.0 mL	18 mg/L
7.0 mL	21 mg/L

2. Add to the end of Section 9.5:

   "Also measure the amplitude difference between the peak and valley of 580 ± 20 nm and 561 ± 20 nm."

METHODS OF SAMPLING AND TESTING
MT 526-16
MOISTURE ANALYSIS OF PNS CATEGORY 8A, 8B, AND 8C SOLID SODIUM CHLORIDE
(*Modified ASTM E534*)

1 Scope

1.1 This method is utilized to determine the water insoluble residue of PNS specified salt for product acceptance by the Montana Department of Transportation. This method will serve as the reference method for salt with an insoluble residue of 0.0% – 10.0% by mass.

2 Referenced Documents

ASTM Standards
E534 Standard Test Methods for Chemical Analysis of Sodium Chloride

Other Standards
PNS Document - Pacific Northwest Snowfighters Snow and Ice Control Chemical Products, Specifications, and Test Protocols for the PNS Association of British Columbia, Colorado, Idaho, Montana, Oregon and Washington. http://pnsassociation.org/wp-content/uploads/PNSSPECS.pdf

3 Apparatus and Reagents

3.1 *Analytical Balance*

3.2 *Desiccator*

3.3 *Oven*

4 Procedure

4.1 Weigh 100g of salt to the nearest 0.01g (split or quartered from original sample) into a previously dried and weighed moisture dish or pan. Distribute the salt in the vessel such that it is not more than 1/4 of an inch in depth at any given location.

4.2 Dry at 110°C for 2 hours.

4.3 Cool to room temperature in a desiccator and weigh.

5 Calculation and Reporting

5.1 Calculate the percentage of moisture as follows:

$$moisture, mass\ \% = \frac{(I - F)}{I} * 100$$

where:

F = final mass of the dry salt
I = initial mass of the wet salt

5.2 Report the insoluble residue to the nearest 0.01%.

6 Validation Data

6.1 Precision and Bias

Moisture %	$\sigma_{(n-1)}$ %	n	95% CL %	Intra Laboratory $\sigma_{(n-1)}$ %	Intra Laboratory n	Intra Laboratory 95% CL %	Inter Laboratory $\sigma_{(n-1)}$ %	Inter Laboratory n	Inter Laboratory 95% CL %
0-5.0%	0.005	29	0.03	0.006	3	0.03	0.006	6	0.04
5.1%-10.0%	0.008	31	0.05	0.008	3	0.06	0.009	6	0.06

METHODS OF SAMPLING AND TESTING
MT 530-16
DETERMINATION OF CHLORIDE IN BRIDGE DECK CEMENT
BY ION CHROMATOGRAPHY

THIS PROCEDURE IS IN DEVELOPMENT

METHODS OF SAMPLING AND TESTING
MT 533-16
METHOD OF TEST FOR CHEMICAL ANALYSIS OF FLY ASH AND POZZOLANS
(Montana Method)

1 Scope

1.1 This test method describes the procedures used to determine the concentration of elemental oxides and sulfur trioxide of fly ash and pozzolans for use in Portland Cement. Three test procedures are described in this document:

1.1.1 Spectroscopic Determination of Elemental Oxides in Fly Ash and Pozzolans

1.1.2 Spectroscopic Determination of Sulfur Trioxide in Fly Ash and Pozzolans

1.1.3 Spectroscopic Determination of Silicon Dioxide in Fly Ash and Pozzolans

1.2 This test method also denotes reference test methods:

1.2.2 Moisture of Fly Ash and Pozzolans – ASTM C311 Sections 11 and 12

1.2.1 Loss on Ignition of Fly Ash and Pozzolans – ASTM C311 Sections 13 and 14

1.3 This standard does not purport to address all of the safety concerns, if any, associated with its use. It is the responsibility of the user of this standard to establish appropriate safety and health practices and determine the applicability of regulatory limitations prior to use.

2 Referenced Documents

ASTM
C114 Standard Test Methods for Chemical Analysis of Hydraulic Cement
C150 Standard Specifications for Portland Cement
C311 Standard Test Methods for Sampling and Testing Fly Ash or Natural Pozzolans for Use in Portland-Cement Concrete
E29 Practice for Using Significant Digits in Test Data to Determine Conformance with Specifications
E542 Practice for Calibration of Laboratory Volumetric Apparatus
E694 Standard Specification for Laboratory Glass Volumetric Apparatus
STP 985 Rapid Methods for Chemical Analysis of Hydraulic Cement

FHWA
FHWA-RD-72-41 A New Method for Rapid Cement Analysis (Atomic Absorption Spectrophotometry)

MT Materials Manual
MT 108 Sampling and Certification of Portland Cement
MT 607 Procedure for Reducing Field Samples to Testing Size

3 Summary of Test Method

3.1 *Spectroscopic Determination of Elemental Oxides in Fly Ash and Pozzolans Summary of Test Method*
In this test method fly ash or pozzolans are dissolved in a combination of acids via a digestion in Teflon vessels secured in a microwave digestion system. The solution is diluted and analyzed by means of an Inductively Coupled Plasma – Optical Emission Spectrophotometer (ICP-OES). The following analytes are quantified as oxides: calcium, magnesium, iron, aluminum, potassium, and sodium.

3.2 *Spectroscopic Determination of Sulfur Trioxide in Fly Ash and Pozzolan Summary of Test Method*
This test method is substantially based on the publications ASTM STP 985, FHWA-RD-72-41 and the reference test method of ASTM C114. In this method, sulfur is extracted from fly ash or pozzolans using nitric acid and hydrogen peroxide and then quantified via ICP-OES analysis. This procedure is valid for the analysis and reporting of sulfur trioxide.

3.3 *Spectroscopic Determination of Silicon Dioxide in Fly Ash and Pozzolans Summary of Test Method*
This test method is substantially based on the publications ASTM STP 985 and FHWA-RD-72-41. In this method, the fly ash or pozzolan is solubilized by fusion with a mixed lithium metaborate and lithium tetraborate powder. The molten glass bead is dissolved in a weak nitric acid solution and analyzed by ICP-OES.

4 Significance and Use

4.1 This procedure is primarily used to provide quality assurance for the fly ash and pozzolan samples submitted by suppliers for inclusion on the MDT Qualified Product List as well as provide analytical information for design applications using fly ash or pozzolans.

5 Apparatus

5.1 *Inductively Coupled Plasma-Optical Emission Spectrophotometer* (ICP-OES)

5.2 *Microwave digestion system* – Capable of heating samples to 200°C and maintaining that temperature for at least 30 minutes.

5.3 *Labware* – Glassware, Teflon, and Plasticware containers that have been properly cleaned and stored filled with dilute nitric acid solution (1 – 5%) for at least 2 days.

5.4 *Analytical Balances* – For the initial weighing of samples and standards, a balance with a precision of 0.0001 g should be used. For weighing material over 210 g, a balance with a precision of 0.01 g should be used.

5.5 *Muffle Furnace* – Capable of maintaining a temperature of 950°C ± 25° verified by clay pyrometric cones yearly.

6 Reagents and Materials

6.1 *Trace metal grade (TMG) Hydrochloric acid (HCl),* concentrated (32-38%)

6.2 *TMG Nitric acid (HNO_3),* concentrated (65-70%)

6.3 *Fluoroboric acid (HBF_4)*, concentrated (46-52%)

6.4 *Hydrogen Peroxide (H_2O_2)*, concentrated (30-38%)

6.5 *Reagent Water* – Purified with a polishing system such that ASTM Type II water or better is obtained.

6.6 *Filter paper* – Particle retention of 20 – 25 µm and a medium flowrate.

6.7 *Ultra-pure grade lithium borate flux* – composed of about 66% Lithium tetraborate ($Li_2B_4O_7$), 33% lithium metaborate ($LiBO_2$) and 1% lithium bromide (LiBr)

7 Sampling

7.1 Fly ash or pozzolan samples are to be collected in accordance with MT 108 and split in accordance with MT 607. A 50 mL sample should be provided to the Chemistry Lab for analysis.

SPECTROSCOPIC DETERMINATION OF ELEMENTAL OXIDES IN FLY ASH AND POZZOLANS

8 Calibration and Standardization

Follow manufacturer's specifications for calibrating and standardizing the ICP-OES. Appendix A provides calibrating and standardizing specifications for a Varian Axial ICP-OES for the determination of elemental oxides.

9 Procedure

9.1 Weigh 0.1000 g ± 0.0005 g of fly ash or pozzolan onto tared waxed paper or a small weighing boat. Record the mass.

9.2 Transfer the sample to a Teflon insert for microwave digestion. Reweigh the waxed paper or weighing boat and note the residual mass from the sample. Record the residual mass and calculate the mass transferred to the Teflon insert.

9.3 In a ventilation hood, add 10 mL TMG Hydrochloric acid, 4 mL TMG Nitric acid, and 4 mL Fluoroboric acid to the Teflon insert using autopipets with disposable tips. Place the Teflon insert in the carousel.

9.4 Once all samples have been prepared, place the carousel in the microwave digestion system. Begin the digestion process (see Appendix A for MDT digestion process). After completion of the digestion process, allow the carousel to cool before removing. The carousel may be left overnight to cool.

9.5 Remove a digestion vessel and open it. Rinse the sample into a clean Teflon beaker. Tare a dry 500 mL plastic volumetric flask. Rinse the solution from the beaker into the plastic volumetric flask. Place the plastic volumetric flask on the balance and add reagent water to a mass of 500.00 g ± 0.05 g. Cap the plastic volumetric flask and invert it several times to homogenize the solution.

9.6 Pour some of the solution into a plastic sample bottle for a stock solution. Label the container with the sample number, date, analyst initials, and as fly ash or pozzolan stock solution.

9.7 Dilute the stock solution by dispensing 1.50 g ± 0.03 g of the solution into a 15 mL centrifuge tube and add reagent water until the mass is 15.00 g ± 0.03 g. Label the centrifuge tube with the sample number, date, analyst initials, and as fly ash or pozzolan dilute solution.

9.8 Repeat Sections 9.5 to 9.7 for all samples.

9.9 Analyze the dilute solutions on an ICP-OES.

SPECTROSCOPIC DETERMINATION OF SULFUR TRIOXIDE IN FLY ASH AND POZZOLANS

10 Calibration and Standardization

Follow manufacturer's specifications for calibrating and standardizing the ICP-OES. Appendix B provides calibrating and standardizing specifications for a Agilent Radial ICP-OES for the determination of sulfur trioxide.

11 Procedure

11.1 Weigh 0.5000 g ± 0.0005 g fly ash or pozzolan directly into a dry 250 mL beaker.

Note – If a thick walled beaker is used that is too heavy for the balance, the cement can be weighed on waxed paper or a small weighing boat and transferred. Reweigh the waxed paper or weighing to account for any cement that may have stuck to it.

11.2 Add 5.0 mL of hydrogen peroxide using an autopipet to each beaker.

11.3 Bring the solution to the 100 mL mark on the beaker with reagent water.

11.4 Add 10.0 mL of nitric acid to the beaker using an autopipet.

11.5 Add a Teflon stir bar and place on a stir plate to agitate for a minimum of 60 minutes. A good stir rate is about two revolutions per second.

11.6 Quantitatively filter into a 500 mL glass volumetric flask and rinse many times with reagent water.

11.7 Bring to volume with reagent water.

11.8 Transfer the solution to a 500 mL HDPE bottle. Label with the sample number, the date, analyst initials, and analyte of interest.

11.9 Once all the samples are prepared, analyze the solutions using the ICP-OES.

SPECTROSCOPIC DETERMINATION OF SILICON DIOXIDE IN FLY ASH AND POZZOLANS

12 Calibration and Standardization

Follow manufacturer's specifications for calibrating and standardizing the ICP-OES. Appendix C provides calibrating and standardizing specifications for a ICP-OES for the determination of silicon dioxide.

13 Procedure

13.1 Weigh 0.8000 g ± 0.005 g of lithium borate flux into a graphite crucible.

13.2 Tare the flux and crucible and add 0.1000 g ± 0.0005 g fly ash or pozzolan on top of the flux.

13.3 Fuse the graphite crucible(s) containing the samples in the muffle furnace at 950°C for 5 minutes. Do not fuse more than two crucibles at a time. Swirl the crucible to consolidate all residual sample that may be sticking to the sides of the crucible. Continue fusing for an additional 15 minutes at 950°C.

13.4 Prior to or during the fusion process, prepare an adequate number of Teflon beakers (at least 200 mL) by rinsing them copiously with reagent water. Add 50 mL of 1 + 24 nitric acid to the beakers. Place a Teflon stir bar in each beaker and cover each with a watch glass. Place the beakers on a stir plate near the furnace and stir at a rate of about two revolutions per second.

13.5 At the completion of the fusion process, quickly transfer the fusion bead from the graphite crucible to one of the prepared Teflon beakers. Inspect the graphite crucible for any trace of sample or fusion material; discard the sample if either are present. Replace the watch glass on the beaker and stir for a minimum of 30 minutes or until all material is dissolved. More acid may be needed to completely dissolve the fusion bead; add the same amount of acid to each sample in order to maintain the same acid content. If additional acid results in material coming out of solution, the sample is not suitable for analysis; discard the sample.

13.6 Once all the material has dissolved, prepare the stock solution by transferring the solution to a 500 mL class A volumetric flask. Bring to volume with reagent water and add nitric acid such that the concentration of nitric acid will be 15 + 485. Cover the flask with Parafilm and invert a minimum of eight times to thoroughly mix.

13.7 Transfer the stock solution to a plastic sample bottle; discard any excess solution. Label the container with the sample number, fly ash or pozzolan, Si analysis, stock solution, date, and analyst initials.

13.8 Once all the samples are prepared, analyze the stock solutions on an ICP-OES.

14 Report

14.1 Data Reporting and Retention for fly ash or pozzolans will be reported as shown below:

Analyte	Report As	Significance
Ca	CaO	XX.XX
Al	Al_2O_3	X.XX
Fe	Fe_2O_3	X.XX
Mg	MgO	X.XX
Si	SiO_2	XX.XX
K	K_2O	X.XXX
Na	Na_2O	0.XXX
S	SO_3	X.XX
LOI	LOI	X.XX
Moisture	Moisture	X.XX

15 Validation

15.1 For validation data and quality control information consult ASTM C114 and ensure all instruments meet its conditions.

APPENDIX A
SPECTROSCOPIC DETERMINATION OF ELEMENTAL OXIDES IN FLY ASH OR POZZOLANS

Varian Axial ICP-OES configuration parameters

Equipment Configuration
Nebulizer: Sea Spray
Spray chamber: cyclonic
Sample pump tubing: White/White
Waste pump tubing: Blue/Blue
Rinse solution: 3% Nitric acid
Torch: High solids with sheath gas
Sheath gas: Argon at 10mL/min
Power: 1.20 kW
Plasma flow: 15.0 L/min
Auxiliary flow: 1.50 L/min
Nebulizer flow: 0.75 L/min
Replicate read time: 6.00s
Instrument stabilization delay: 15s
Sample uptake delay: 30s
Pump rate: 15 rpm
Rinse time: 120s
Fast pump: yes
Replicates: 5

Line Selection for Standards, Samples, and Blanks: Select the best line(s) and average for each element.
Al: 396.152, 394.401, 309.271, and 257.509.
Ca: 393.366, 370.602, 318.127, 317.933, 315.887, 219.779, and 210.324.
Fe: 273.358, 261.187, 260.709, 259.940, and 238.204.
Mg: 285.213, 280.270, 279.553, and 202.582.
K: 766.491 and 769.897.
Na: 589.592 and 588.995.

Calibration Varian Axial ICP-OES
Type: Linear for all elements.
Linear-Maximum percent error of 10% and Confidence limit of 0.99%.
Calibration Standard Selection: Pick NIST or CCRL pozzolan standards that provide a range covering what would likely be expected of the samples being analyzed. Usually a minimum of four should be selected. If any samples fall outside the range of the selected standards more should be selected to expand the range.

Milestone Ethos EZ microwave digestion system

Digestion program used: portcement.mpr

Heat and time: Heat to 200°C and hold temperature during a 30 minute interval. Followed by a 10 minute cooling period

Rotor: SK-10

APPENDIX B
SPECTROSCOPIC DETERMINATION OF SULFUR TRIOXIDE IN FLY ASH OR POZZOLANS

Agilent Radial ICP-OES configuration parameters

Equipment Configuration
Nebulizer: OneNeb
Spray chamber: cyclonic
Sample pump tubing: White/White
Waste pump tubing: Blue/Blue
Rinse solution: 3% Nitric acid
Torch: High solids
Power: 1.00 kW
Plasma flow: 15.00 L/min
Auxiliary flow: 1.50 L/min
Nebulizer flow: 0.75 L/min
Viewing height: 10 mm
Replicate read time: 10.00 s
Instrument stabilization delay: 15s
Sample uptake delay: 30s
Pump rate: 15rpm
Rinse time: 10s
Fast pump: yes
Replicates: 3

Line Selection for Standards, Samples, and Blanks: Select the best line(s) and average for each element.
S : 180.669, 181.972

Calibration Agilent Radial ICP-OES
Type: Linear for all elements.
Linear-Maximum percent error of 10% and Confidence limit of 0.99%.
Calibration Standard Selection: Pick NIST or CCRL pozzolan standards that provide a range covering what would likely be expected of the samples being analyzed. Usually a minimum of four should be selected. If any samples fall outside the range of the selected standards more should be selected to expand the range.

APPENDIX C
SPECTROSCOPIC DETERMINATION OF SILICON DIOXIDE IN FLY ASH OR POZZOLANS

Agilent Radial ICP-OES configuration parameters

Equipment Configuration
Nebulizer: OneNeb
Spray chamber: cyclonic
Sample pump tubing: White/White
Waste pump tubing: Blue/Blue
Rinse solution: 3% Nitric acid
Torch: High solids
Power: 1.10 kW
Plasma flow: 15.00 L/min
Auxiliary flow: 1.50 L/min
Nebulizer flow: 0.75 L/min
Viewing height: 10 mm
Replicate read time: 10.00 s
Instrument stabilization delay: 15s
Sample uptake delay: 45s
Pump rate: 15rpm
Rinse time: 10s
Fast pump: yes
Replicates: 3

Line Selection for Standards, Samples, and Blanks: Select the best line(s) and average for each element.
Si : 212.412

Calibration Agilent Radial ICP-OES
Type: Linear for all elements.
Linear-Maximum percent error of 10% and Confidence limit of 0.99%.
Calibration Standard Selection: Pick NIST or CCRL pozzolan standards that provide a range covering what would likely be expected of the samples being analyzed. Usually a minimum of four should be selected. If any samples fall outside the range of the selected standards more should be selected to expand the range.

METHODS OF SAMPLING AND TESTING
MT 534-16
CHEMICAL ANALYSIS OF PORTLAND CEMENT
(Montana Method)

1 Scope

1.1 This test method describes the procedures used to determine the concentration of elemental oxides and sulfur trioxide of Portland cement. Two test procedures are described in this document:

1.1.1 Spectroscopic Determination of Elemental Oxides in Portland Cement

1.1.2 Spectroscopic Determination of Sulfur Trioxide in Portland Cement

1.2 This test method also denotes reference test methods:

1.2.1 Loss on Ignition of Portland Cement – ASTM C114, Section 18

1.2.2 Insoluble Residue of Portland Cement – ASTM C114, Section 7

1.2.3 Carbon Dioxide Determination in Portland Cement – ASTM C114, Section 24

1.2.4 Sulfide Determination in Portland Cement – ASTM C114, Section 17

1.2.5 Halogen Determination in Portland Cement – No current validated method

1.3 This standard does not purport to address all of the safety concerns, if any, associated with its use. It is the responsibility of the user of this standard to establish appropriate safety and health practices and determine the applicability of regulatory limitations prior to use.

2 Referenced Documents

ASTM
C114 Standard Test Methods for Chemical Analysis of Hydraulic Cement
C150 Standard Specifications for Portland Cement
E29 Practice for Using Significant Digits in Test Data to Determine Conformance with Specifications
E542 Practice for Calibration of Laboratory Volumetric Apparatus
E694 Standard Specification for Laboratory Glass Volumetric Apparatus
STP 985 Rapid Methods for Chemical Analysis of Hydraulic Cement

FHWA
FHWA-RD-72-41 A New Method for Rapid Cement Analysis (Atomic Absorption Spectrophotometry)

MT Materials Manual
MT 108 Sampling and Certification of Portland Cement
MT 607 Procedure for Reducing Field Samples to Testing Size

3 Summary of Test Method

3.1 *Spectroscopic Determination of Elemental Oxides in Portland Cement Summary of Test Method*
In this test method, Portland cement is dissolved in a combination of acids via a microwave digestion system. The solution is then diluted and analyzed by an Inductively Coupled Plasma – Optical Emission Spectrophotometer (ICP-OES). The following analytes are quantified as oxides: calcium, magnesium, silicon, iron, aluminum, potassium, titanium, sodium, manganese, zinc, chromium, and phosphorus.

3.2 *Spectroscopic Determination of Sulfur Trioxide in Portland Cement Summary of Test Method* This test method is substantially based on the publications STP 985, FHWA-RD-72-41, and ASTM C114. In this method, sulfur is extracted from Portland cement using nitric acid and hydrogen peroxide and then quantified via ICP-OES analysis. This procedure is valid for the analysis and reporting of sulfur trioxide.

4 Significance and Use

4.1 This procedure is primarily used to provide quality assurance for the Portland cement submittals for suppliers on the MDT Qualified Product List as well as provide analytical information for design applications using Portland cement.

5 Apparatus

5.1 *Inductively Coupled Plasma-Optical Emission Spectrophotometer* (ICP-OES)

5.2 *Microwave digestion system* – Capable of heating samples to 200°C and maintaining that temperature for at least 30 minutes.

5.3 *Labware* – Glassware, Teflon, and Plasticware containers that have been properly cleaned and stored filled with dilute nitric acid solution (1 – 5%) for at least 2 days.

5.4 *Analytical Balances* – For the initial weighing of samples and standards, a balance with a precision of 0.0001 g should be used. For weighing material over 210 g, a balance with a precision of 0.01 g should be used.

6 Reagents and Materials

6.1 Trace metal grade (TMG) hydrochloric acid (HCl) – Any commercially available brand at a concentration of 32-38%.

6.2 TMG nitric acid (HNO_3) – Any commercially available brand at a concentration of 65-70%.

6.3 Fluoroboric acid (HBF_4) – Any commercially available brand at a concentration of 46-54%.

6.4 Hydrogen Peroxide (H_2O_2) – Any commercially available brand at a concentration of 30-38%.

6.5 Reagent Water – Purified with a polishing system such that ASTM Type II water or better is obtained.

6.6 Filter paper – Particle retention of 20 – 25 µm and a medium flowrate.

7 Sampling

7.1 Cement samples are to be collected in accordance with MT 108 and split in accordance with MT 607. A 50 mL sample should be provided to the Chemistry Lab for analysis.

SPECTROSCOPIC DETERMINATION OF ELEMENTAL OXIDES IN PORTLAND CEMENT

8 Calibration and Standardization

Follow manufacturer's specifications for calibrating and standardizing the ICP-OES. Appendix A provides calibrating and standardizing specifications for an Agilent Radial ICP-OES for the determination of elemental oxides.

9 Procedure

9.1 Weigh 0.2000 g ± 0.0005 g Portland cement onto tared waxed paper or small weighing boat. Record the mass.

9.2 Transfer the sample to a Teflon insert for microwave digestion. Reweigh the waxed paper or weighing boat and note the residual mass from the sample. Record the residual mass and calculate the mass transferred to the Teflon insert.

9.3 In a ventilation hood, add 10 mL TMG Hydrochloric acid, 4 mL TMG Nitric acid, and 4 mL Fluoroboric acid to the Teflon insert using autopipets with disposable tips. Place the Teflon insert in the carousel.

9.4 Assemble all components required for proper microwave digestion according to the manufacturer's instructions and then run the digestion. MDT's parameters for a Milestone Ethos EZ microwave digestion system are in Appendix A.

9.5 After completion of the digestion process, allow the carousel to cool before removing. The carousel may be left overnight to cool.

9.6 Remove the digestion vessel and open it. Rinse the sample into a clean Teflon beaker or other suitable cleaned container. Tare an appropriate storage container on the analytical balance. Rinse the sample into the storage container. Place the storage container back onto the analytical balance and dilute with reagent water until a mass of 100.00 g ± 0.05. Record the mass to nearest 0.01 g.

9.9 Label the sample bottle with the sample number, date, analyst initials, and as Portland cement stock solution.

9.10 Using the stock solution, prepare a dilute solution for the analysis of silicon and calcium oxides. In a centrifuge tube, dilute the stock solution at a ratio of 1:5 with reagent water. Label the centrifuge tube with the sample number, date, analyst initials, and as Portland cement dilute solution.

9.11 Once all the samples have been prepared, analyze the dilute and stock solutions on an ICP-OES.

SPECTROSCOPIC DETERMINATION OF SULFUR TRIOXIDE IN PORTLAND CEMENT

10 Calibration and Standardization

Follow manufacturer's specifications for calibrating and standardizing the ICP-OES. Appendix B provides calibrating and standardizing specifications for an Agilent Radial ICP-OES for the determination of sulfur trioxide.

11 Procedure

11.1 Weigh 0.5000 g ± 0.0005 g Portland cement directly into a dry 250 mL beaker.

Note – If a thick walled beaker is used that is too heavy for the balance, the cement can be weighed on waxed paper or a small weighing boat and transferred. Reweigh the waxed paper or weighing to account for any cement that may have stuck to it.

11.2 Add 5.0 mL of hydrogen peroxide using an autopipet to the beaker.

11.3 Bring the solution to the 100 mL mark on the beaker with reagent water.

11.4 Add 10.0 mL of nitric acid to the beaker using an autopipet.

11.5 Add a Teflon stir bar and place on a stir plate to agitate for a minimum of 60 minutes. A good stir rate is about two revolutions a second.

11.6 Quantitatively filter the sample into a 500 mL glass volumetric flask rinsing many times with reagent water.

11.7 Bring to volume with reagent water.

11.8 Transfer the solution to a 500 mL HDPE bottle. Label with the sample number, the date, analyst initials, and analyte of interest.

11.9 Once all the samples are prepared, analyze the solutions using the ICP-OES.

12 Calculation or Interpretation of Results

12.1 Portland Cement Potential Phase Composition Calculations

12.1.1 Refer to ASTM C150 Annex A1.

12.2 Portland Cement Limestone Content Calculation

12.2.1 Refer to ASTM C150 Annex A2.

12.3 Equivalent Alkalis Calculation for Portland Cement

12.3.1 Refer to ASTM C150 Section 4 Table 2.

13 Report

13.1 Data Reporting for Portland Cement will be reported as shown below:

Analyte	Reported As	Significance
Ca	CaO	XX.XX
Al	Al_2O_3	X.XX
Fe	Fe_2O_3	X.XX
Mg	MgO	X.XX
Si	SiO_2	XX.XX
Ti	TiO_2	0.XX
Cr	Cr_2O_3	0.0XX
K	K_2O	X.XXX
Mn	Mn_2O_3	0.XXX
Na	Na_2O	0.XXX
P	P_2O_5	0.XXX
Zn	ZnO	0.XXX
S	SO_3	X.XX
S-	S-	X.XX
LOI	LOI	X.XX
ISR	ISR	0.XX
CO_2	CO_2	X.XX
Lime Content	Lime Content	X.X
C_3S	C_3S	XX.X
C_2S	C_2S	XX.X
C_3A	C_3A	X.X
C_4AF	C_4AF	XX.X
Alkalinity	Alkalinity	X.XX
Cl-	Cl-	0.0XX
F-	F-	0.XX

14 Validation

14.1 For validation data quality control information consult ASTM C114 and ensure all instruments meet its conditions.

APPENDIX A
SPECTROSCOPIC DETERMINATION OF ELEMENTAL OXIDES IN PORTLAND CEMENT

Milestone Ethos EZ microwave digestion system

Digestion program used: portcement.mpr

Heat and time: Heat to 200°C and hold temperature during a 30 minute interval. Followed by a 10 minute cooling period

Rotor: SK-10

Agilent Radial ICP-OES configuration parameters

Equipment Configuration for Ca and Si

a. Nebulizer: One Neb
b. Spray chamber: cyclonic
c. Sample pump tubing: Gray/Gray
d. Waste pump tubing: Blue/Blue
e. Rinse solution: 5% Nitric acid
f. Torch: High solids
g. Power: 1.20 kW
h. Plasma flow: 15.00 L/min
i. Auxiliary flow: 1.50 L/min
j. Nebulizer flow: 0.60 L/min
k. Viewing height: 10 mm
l. Replicate read time: 1.00 s
m. Instrument stabilization delay: 15 s
n. Sample uptake delay: 30 s
o. Pump rate: 15 rpm
p. Rinse time: 10 s
q. Fast pump: yes
r. Replicates: 8

Equipment Configuration for all other analytes

a. Nebulizer: One Neb
b. Spray chamber: cyclonic
c. Sample pump tubing: White/White
d. Waste pump tubing: Blue/Blue
e. Rinse solution: 5% Nitric acid
f. Torch: High solids
g. Power: 1.15 kW
h. Plasma flow: 15.00 L/min
i. Auxiliary flow: 1.50 L/min
j. Nebulizer flow: 0.75 L/min
k. Viewing height: 8 mm
l. Replicate read time: 1.00 s
m. Instrument stabilization delay: 15 s
n. Sample uptake delay: 45 s
o. Pump rate: 15 rpm
p. Rinse time: 40 s
q. Fast pump: yes
r. Replicates: 5

Line Selection for Standards, Samples, and Blanks: Select the best line(s) and average for each element.

a. Ca : 210.324, 219.779, 315.887, 317.933, 318.127, 370.602, 393.366
b. Al: 309.271
c. Fe: 261.187
d. Mg: 280.270
e. Si: 185.005, 185.185, 250.690, 251.611, 251.920, 252.411, 252.851, 288.158
f. Ti: 334.941
g. Cr: 267.716
h. K: 766.491
i. Mn: 257.610
j. Na: 589.592
k. P: 213.618
l. Zn: 213.857

Calibration Agilent Radial ICP-OES

a. Type: Linear for all elements.
b. Linear-Maximum percent error of 10% and Confidence limit of 0.99%.
c. Calibration Standard Selection: Pick NIST or CCRL Portland cement standards that provide a range covering what would likely be expected of the samples being analyzed. Usually a minimum of four should be selected. If any samples fall outside the range of the selected standards more should be selected to expand the range.

APPENDIX B
SPECTROSCOPIC DETERMINATION OF SULFUR TRIOXIDE IN PORTLAND CEMENT

Agilent Radial ICP-OES configuration parameters

Equipment Configuration

a. Nebulizer: OneNeb
b. Spray chamber: cyclonic
c. Sample pump tubing: White/White
d. Waste pump tubing: Blue/Blue
e. Rinse solution: 5% Nitric acid
f. Torch: High solids
g. Power: 1.45 kW
h. Plasma flow: 15.00 L/min
i. Auxiliary flow: 1.50 L/min
j. Nebulizer flow: 0.55 L/min
k. Viewing height: 6 mm
l. Replicate read time: 3.00 s
m. Instrument stabilization delay: 15 s
n. Sample uptake delay: 30 s
o. Pump rate: 15 rpm
p. Rinse time: 10 s
q. Fast pump: yes
r. Replicates: 3

Line Selection for Standards, Samples, and Blanks: Select the best line(s) and average for each element

a. S : 180.669, 181.972

Calibration Agilent Radial ICP-OES

a. Type: Linear for all elements.
b. Linear-Maximum percent error of 10% and Confidence limit of 0.99%.
c. Calibration Standard Selection: Pick NIST or CCRL Portland cement standards that provide a range covering what would likely be expected of the samples being analyzed. Usually a minimum of four should be selected. If any samples fall outside the range of the selected standards more should be selected to expand the range.

METHODS OF SAMPLING AND TESTING
MT 535-16
BRIDGE DECK CRACK SEALANT IR TEST

THIS PROCEDURE IS IN DEVELOPMENT

METHODS OF SAMPLING AND TESTING
MT 536-16
CHEMICAL ANALYSIS OF SILICA FUME
(Montana Method)

1 Scope

1.1 This method describes the procedures to be used for determining chemical analytes in silica fume as recommended by AASHTO M 307 Standard Specification for Silica Fume Used in Cementitious Mixtures.

1.2 Spectroscopic Determination of Silicon Dioxide in Silica Fume – MT 533 Chemical Analysis of Fly Ash and Pozzolans

1.3 Moisture Content of Silica Fume – ASTM C311 sections 11 and 12

1.4 Loss on Ignition (LOI) of Silica Fume – ASTM C311 sections 13 and 14

1.5 This standard does not purport to address all of the safety concerns, if any, associated with its use. It is the responsibility of the user of this standard to establish appropriate safety and health practices and determine the applicability of regulatory limitations prior to use.

2 Referenced Documents

ASTM
C114 Standard Test Methods for Chemical Analysis of Hydraulic Cement
C311 Standard Test Methods for Sampling and Testing Fly Ash or Natural Pozzolans for Use in Portland-Cement Concrete

AASHTO
M 307 Standard Specification for Silica Fume Used in Cementitious Mixtures

MT Materials Manual
MT 108 Sampling and Certification of Portland Cement
MT 533 Chemical Analysis of Fly Ash and Pozzolans
MT 607 Procedure for Reducing Field Samples to Testing Size

3 Significance and Use

3.1 This procedure is primarily used to provide quality assurance for the silica fume submittals for suppliers on the MDT Qualified Product List as well as provide analytical information for design applications using silica fume.

4 Report

4.1 Data Reporting and Retention for Silica Fume will be reported as shown below:

Analyte	Report As	Significance
Si	SiO_2	XX.XX
Moisture	Moisture	X.XX
LOI	LOI	X.XX

5 Validation

5.1 For validation data and quality control information consult ASTM C114 and ensure all instruments meet its conditions.

METHODS OF SAMPLING AND TESTING
MT 537-16
CHEMICAL ANALYSIS OF GROUND GRANULATED BLAST-FURNACE SLAG
(Montana Method)

1 Scope

1.1 This method describes the procedures to be used for determining chemical analytes of ground granulated blast-furnace slag (GGBFS) as recommended by AASHTO M 302 Slag Cement for Use in Concrete Mortars.

1.1.1 This method includes the procedures for the determination of chloride by Ion Chromatography (IC) and the following reference methods.

1.2 This test method also denotes reference test methods:

1.2.1 Spectroscopic Determination of Sulfur Trioxide – MT 533 Chemical Analysis of Fly Ash and Pozzolans

1.2.2 Sulfide Determination – Reference method in ASTM C114 Section 17.2.

1.3 This standard does not purport to address all of the safety concerns, if any, associated with its use. It is the responsibility of the user of this standard to establish appropriate safety and health practices and determine the applicability of regulatory limitations prior to use.

2 Referenced Documents

ASTM
C114 Standard Test Methods for Chemical Analysis of Hydraulic Cement

AASHTO
M 302 Slag Cement for Use in Concrete Mortars

MT Materials Manual
MT 108 Sampling and Certification of Portland Cement
MT 533 Chemical Analysis of Fly Ash and Pozzolans
MT 607 Procedure for Reducing Field Samples to Testing Size

3 Summary of Test Method

3.1 Chloride ions are extracted from GGBFS with nitric acid. The resulting sample solutions are analyzed on an Ion Chromatograph.

4 Significance and Use

4.1 This procedure is primarily used to provide quality assurance for the GGBFS submittals by suppliers for inclusion on the MDT Qualified Product List as well as provide analytical information for design applications using GGBFS.

5 Apparatus

5.1 *Ion Chromatograph (IC)*

5.2 *Analytical Balance* – A balance with a precision of 0.0001 g should be used.

6 Reagents and Materials

6.1 *Trace metal grade (TMG) Nitric acid (HNO_3)*, concentrated (65-70%)

6.2 *Sodium Hydroxide (NaOH)*, concentration of 0.7 Molar

6.2 *Reagent Water* – Purified with a polishing system such that ASTM Type II water or better is obtained.

6.3 *Syringe filters* - particle retention of 0.2 µm

6.4 *Litmus paper* - capable of indicating basicity or acidity

7 Sampling

7.1 GGBFS samples are to be collected in accordance with MT 108 and split in accordance with MT 607. A 50 mL sample should be provided to the Chemistry Lab for analysis.

8 Calibration and Standardization

Follow manufacturer's specifications for calibrating and standardizing the IC. Appendix A provides calibrating and standardizing specifications for a Metrohm 883 Basic IC plus for the determination of chloride.

9 Procedure

9.1 Weigh 0.2500 g ± 0.0005 g GGBFS into a 50 mL beaker. Record the mass.

9.2 Gently tap the materials to thinly spread it over the bottom of the beaker.

9.3 Mix 1 mL of reagent water and 200 µL of TMG Nitric Acid.

9.3 Add the acid/water mixture to the sample in a hood and gently break apart clumps using a glass rod.

9.4 Set the mixture on a warm hot plate for five minutes, intermittently grinding any clumps so the slag completely dissolves.

9.5 Remove the sample from the hot plate; let it cool for 10 minutes.

9.6 Add 1 mL of 0.7 M sodium hydroxide to the sample. Check the pH with litmus paper; continue adding sodium hydroxide or nitric acid until the pH is neutral.

9.7 Transfer the sample to a 100 mL volumetric flask and bring to volume with reagent water.

9.8 Using a syringe filter, transfer a sufficient amount of the sample to a vial for the IC.

9.9 Analyze the sample on the IC.

10 Report

10.1 Data Reporting and Retention for GGBFS will be reported as shown below:

Analyte	Report As	Significance
S	SO_3	X.XX
S-	S-	X.XX
Cl-	Cl-	0.0XX

11 Validation

11.1 For validation data and quality control information consult ASTM C114 and ensure all instruments meet its conditions.

APPENDIX A
CHLORIDE DETERMINATION IN GGBFS USING ION CHROMATOGRAPHY

Metrohm 883 Basic IC Plus configuration parameters

Equipment Configuration
Run time: 20 minutes
Injection volume: 20µL
Eluent: 3.2 mM sodium carbonate and 1.0 mM sodium bicarbonate

METHODS OF SAMPLING AND TESTING
MT 538-12
CHEMICAL ANALYSIS OF BLENDED CEMENT

THIS PROCEDURE IS IN DEVELOPMENT

METHODS OF SAMPLING AND TESTING
MT 548-16
METHOD OF TEST FOR ANALYSIS OF TRAFFIC PAINT
(*Montana Method*)

1. Scope

1.1 This method describes the procedures for analyzing physical and chemical properties of traffic paint samples including:

1.1.1 Color and Contrast Ratio – Modified ASTM D2805 and E1347

1.1.2 Viscosity – ASTM D562

1.1.3 Density – Modified ASTM D1475

1.1.4 Freeze-Thaw – primarily Modified ASTM D562 and D2243

1.1.5 Static Heat Stability

1.1.6 Bleeding Ratio – primarily Modified ASTM D868

1.1.7 Skinning and Lumps

1.1.8 Settling

1.1.9 Skinning

1.1.10 FTIR Spectra Verification – Modified ASTM D7588

1.1.11 Cracking

1.1.12 Determination of Heavy Metals

1.2 This standard involves hazardous materials, operations, and equipment. This standard does not purport to address all of the safety concerns associated with its use. It is the responsibility of the user of this procedure to establish appropriate safety and health practices and to determine the applicability of regulatory limitations prior to use.

2 Referenced Documents

ASTM Standards

D562 Standard Test Method for Consistency of Paints Measuring Krebs Unit (KU) Viscosity Using a Stormer-Type Viscometer
D660 Standard Test Method for Evaluating Degree of Checking of Exterior Paints
D661 Standard Test Method for Evaluating Degree of Cracking of Exterior Paints
D823 Standard Practices for Producing Films of Uniform Thickness of Paint, Varnish, and Related Products on Test Panels
D868 Standard Practice for Determination of Degree of Bleeding of Traffic Paint
D1475 Standard Test Method for Density of Liquid Coatings, Inks, and Related Products
D2243 Standard Test Method for Freeze-Thaw Resistance of Water-Borne Coatings
D2805 Standard Test Method for Hiding Power of Paints by Reflectometry
D7588 Standard Guide for FTIR Fingerprinting of a Non-Aqueous Liquid Paint as Supplied in the Manufacturer's Container
E77 Standard Test Method for Inspection and Verification of Thermometers
E1347 Test Method for Color and Color-Difference Measurement by Tristimulus Colorimetry

3 Summary of Test Methods

3.1 The Static Heat test involves storing paint at an elevated temperature for a week then conducting a viscosity test on the paint.

3.2 The Skinning and Lumps test involves storing paint at ambient conditions then straining the paint with a 100 mesh screen.

3.3 The Settling test involves centrifuging paint to produce a separation of the paint components.

3.4 The Skinning test involves partially filling a container with paint and inspecting it after two days to see if the paint has formed a skin.

3.5 The Cracking test involves casting a paint film over asphalt saturated felt and examining the film for cracks after it has dried.

3.6 For the determination of heavy metals, the paint is analyzed for the presence of antimony (Sb), arsenic (As), cadmium (Cd), chromium (Cr), cobalt (Co), lead (Pb), mercury (Hg), and tin (Sn). Paint samples are prepared through a microwave digestion system using nitric and fluoroboric acids. The samples are then analyzed for mercury with a cold vapor technique using a vapor generation assembly (VGA) outfitted onto a flame atomic absorption spectrometer (FAAS) and for the remainder of the analytes by an inductively coupled plasma optical emission spectrometer (ICP-OES).

4 Significance and Use

4.1 This procedure is primarily used to provide quality assurance for traffic paint used within the Montana Department of Transportation's oversight.

5 Apparatus

5.1 *Analytical Balance* – Capable of measuring to 0.0001 g.

5.2 *Microwave digestion system* – Capable of heating samples to 200°C and maintaining that temperature for at least 10 minutes. The system must use sealable vessels that prevent the escape of vapors.

5.3 *ICP-OES* – Capable of measuring trace elements to low parts per billion (ppb) levels.

5.4 *FAAS* – Outfitted with a hollow cathode lamp (HCL) for measuring Hg and capable of being outfitted with a VGA.

5.5 *VGA* – Capable of cold vapor techniques for detecting mercury at low ppb to high parts per trillion (ppt) levels.

5.6 *Plasticware* – Suitable for trace element analysis. Properly cleaned and stored filled with dilute nitric acid solution (1 – 5%) for at least 2 days.

5.7 *Centrifuge* – Capable of a centrifugal force of 1112 Newtons.

5.8 *Asphalt Felt Paper* – 15 pound saturated asphalt felt paper.

5.9 *Cans* – Pint sized, lined and unlined.

5.10 *Screens* – 100 mesh screen capable of accommodating paint.

5.11 *Leneta 5C form* – an opacity chart containing a white section and a black section paint films can be applied to.

5.12 *Oven* – Capable of maintaining 60°C ± 1°C.

6 Reagents and Materials

6.1 Trace metal grade (TMG) hydrochloric acid (HCl) – Any commercially available brand at a concentration of 32-38%.

6.2 TMG nitric acid (HNO_3) – Any commercially available brand at a concentration of 63-70%.

6.3 Fluoroboric acid (HBF_4) – Any commercially available brand at a concentration of 46-54%.

6.4 Stannous chloride ($SnCl_2$) solution – 10% stannous chloride w/v and 20% TMG hydrochloric acid.

6.5 1+1 hydrochloric acid – Made with TMG HCl (e.g., Add 500 ml TMG HCl to 400 ml reagent water and dilute to 1 L).

6.6 *Reagent Water* – Purified with a polishing system such that ASTM Type II water or better is obtained.

7 Calibration and Standardization

7.1 Follow manufacturer's instructions for calibrating and standardizing the ICP-OES. Appendix A provides parameters for a Varian Axial ICP-OES used by MDT.

7.2 Follow manufacturer's instructions for calibrating and standardizing the FAAS and VGA. Appendix A provides parameters for a Varian FAAS used by MDT.

7.3 Check the calibration of the oven every 6 month with a thermometer verified in accordance with ASTM E77.

PROCEDURES

8 Color and Contrast Ratio

8.1 The paint shall be tested in accordance with ASTM D2805 and ASTM E1347 except for the following stipulations.

8.1.1 Rescind ASTM D2805 Sections 7.1.3 through 7.8 and replace with "15 mil films shall be cast on Leneta 5C opacity charts or equivalent and dried for a minimum of 2 hours." Use a colorimeter to determine coordinates per ASTM E1347. Use Y, x, and y coordinates with illuminant and observer settings of C and 2° when collecting readings. Record Y, x and y coordinates. Use these coordinates to calculate contrast ratio via ASTM D2805.

9 Viscosity

9.1 The paint shall be tested in accordance with ASTM D562.

10 Density

10.1 The paint shall be tested in accordance with ASTM D1475 including the following modification.

10.1.1 Add "Stir the sample until homogeneous." at the beginning of ASTM D1475 Section 9.1.

11 Freeze-Thaw

11.1 The paint shall be tested in accordance with ASTM D2243. Repeat procedures for 3 freeze-thaw cycles (ASTM D2243 Section 7.3). MDT does not require a control sample as described in ASTM D2243 Section 7.1.

11.2 After completion of the freeze-thaw procedures, visually examine the sample and note any signs of livering, hard settling, coagulating, lumps or coarse particles. Then determine the viscosity of the freeze-thaw sample per ASTM D562. Compare the original viscosity to the freeze-thaw viscosity and determine if there was an increase or decrease in viscosity.

12 Static Heat Stability

12.1 Pour paint into a pint container to within 6.4 mm (0.25 inches) of the top. Close the container, seal it with tape, and place the container in an oven maintained at 60°C ± 1°C (140°F ± 2°F) for 7 days.

12.2 After 7 days, remove the container from the oven. Equilibrate the paint at standard conditions and gently stir the paint for a minimum of 5 minutes. Visually examine the sample and note any signs of livering, hard settling, coagulating, lumps or coarse particles. Then determine the viscosity of the static heat sample per ASTM D562. Compare the original viscosity to the static heat viscosity and determine if there was an increase or decrease in viscosity.

13 Bleeding Ratio

13.1 The paint shall be tested in accordance with ASTM D868, except in section 7.4.1.1, replace the CIE L* value with the reflectance coordinate Y.

14 Skinning and Lumps

14.1 Fill a pint container ¾ full and seal it tightly. Allow the container and sample to sit for 72 hours at ambient laboratory conditions then strain the paint through a 100 mesh screen. Note if any lumps or skin is retained on the screen.

15 Settling

15.1 Fill a centrifuge tube with paint and revolve it for 2 hours at a speed producing a centrifugal force of 1112 Newtons (250 pound-force). Note the amount of separation of the components; there shouldn't be more than 13 mm of separation.

16 Skinning

16.1 Fill a lined paint can ¾ full with paint and seal tightly. Invert the can momentarily, and then turn it upright. Place the can in an area where the temperature is 21°C to 32°C for 48 hours. Do not agitate or disturb the sample. After 48 hours, open the can and inspect the paint for the presence or absence of a skin.

17 FTIR Spectra Verification

17.1 The paint shall be tested in accordance with ASTM D7588. Compare the acquired absorbance spectrum to a previously measured spectrum or one provided by the manufacturer. Note any significant differences between the spectra. For multicomponent paints, determine a spectrum for each component separately.

18 Cracking

18.1 The film shall be cast with a 380 micron (15 mil) drawdown blade on 15-pound saturated asphalt felt paper. Allow the film to dry for 24 ours then examine the paint for cracking. Cracking is understood to be any break extending through the paint film to the surface it is applied to. Partial breakthroughs known as checking are not categorized as cracking and are not addressed in this test. Consult ASTM D660 and ASTM D661 to better understand definitions of cracking and checking.

19 Heavy Metals Determination

19.1 Procedure

19.1.1 Weigh 0.50 g of paint or a paint component into a Teflon insert of a high pressure sample rotor system for microwave digestion. Make note of the mass to 0.0001 g.

19.1.2 In a properly functioning ventilation hood add 8 mL TMG nitric acid and 2 mL of fluoroboric acid to the Teflon inserts. Place the Teflon insert in the carousel.

19.1.3 Assemble all components required for proper microwave digestion according to the manufacturer's instructions and then run the digestion. MDT's parameters for a Milestone Ethos EZ microwave digestion system are in Appendix A.

19.1.4 Following the manufacturer's instructions, remove and cool the digestion vessel and open it. Rinse the sample into a clean Teflon beaker or other suitable cleaned container. Tare an appropriate storage container on the analytical balance. Rinse the sample into the storage container. Place the storage container back onto the analytical balance and dilute with reagent water to a mass of 100 g. Record the mass to nearest 0.01 g.

Note – If titanium dioxide is present in the sample, the sample should be filtered with a syringe filter prior to analyzing in order to remove small particles that could block the nebulizer.

19.1.5 Once all the samples have been prepared, analyze them on an ICP-OES and a FAAS outfitted with a VGA.

19.2 Calculation or Interpretation of Results

19.2.1 For elements Sb, As, Cd, Cr, Co, Pb, and Sn measured in mg/kg on the spectrometer, the sample concentration is calculated by multiplying the measured value by the ratio of the solution weight and then dividing by the sample weight.

19.2.2 For Hg measured in µg/kg on the spectrometer, the sample concentration (mg/kg) is calculated by multiplying the measured value by the ratio of the solution weight then dividing by the sample weight then dividing by 1000.

19.3 Report

19.3.1 Elements Sb, As, Cd, Cr, Co, Pb, Hg, and Sn are to be reported in the units mg/kg.

APPENDIX A

Varian Axial ICP-OES configuration parameters

Equipment Configuration

a. Nebulizer: Sea Spray
b. Spray chamber: cyclonic
c. Sample pump tubing: White/White
d. Waste pump tubing: Blue/Blue
e. Rinse Solution: 3% Nitric Acid
f. Torch: High solids with sheath gas
g. Sheath gas: Argon at 10mL/min
h. Power: 1.40 kW
i. Plasma flow: 15.0 L/min
j. Auxiliary flow: 1.50 L/min
k. Nebulizer flow: 0.55 L/min
l. Replicate Read time: 10.00 s
m. Instrument stabilization delay: 15.00s
n. Sample uptake delay: 30.00s
o. Pump rate: 15 rpm
p. Rinse time: 100s
q. Fast pump: yes
r. Replicates: 3

Line Selection for Standard, Samples, and Blanks

a. As 188.980, 193.696
b. Cd 214.439
c. Co 230.786, 231.160
d. Cr 267.716
e. Pb 220.353
f. Sb 217.582, 231.146
g. Sn 189.925, 283.998

Calibration Varian Axial ICP-OES

a. Type: Linear for all elements
b. Linear-Maximum percent error of 5% except Cd that can be 15% and confidence limit of 0.99%
c. Calibration standards: Prepare calibration standards and blanks so that the sample matrices are being mimicked by compensating for the content of acids in the case of analyzing the amine component of two component paints. Prepare a total of one standard blank and three standards with varying concentrations of each desired analyte. For other paint types or components standard additions will need to be made by adding 3 differing spikes to a known portion of sample solution kept at a constant portion of each solution followed by a dilution with no spike.

An example for a stock solution taken to 500 g for standard addition spikes is as follows:

Analyte	Starting Concentration (mg/kg)	Mass Added (g)	Standard Concentration (mg/kg)
As	1000	0.5	1.0
Cd	1000	0.01	0.02
Co	1000	0.5	1.0
Cr	1000	0.1	0.2
Pb	1000	0.5	1.0
Sb	1000	0.5	1.0
Sn	1000	0.5	1.0

40 mL of TMG nitric acid and 10 mL of fluoroboric acid would added to keep the analytes stable.

Varian AA 240FS and VGA configuration parameters

Equipment configuration

a. Measurement time: 10.00s
b. Read delay: 115s
c. Sample tubing: Purple/black
d. Acid and reductant tubing: black/black
e. Replicates standards: 3
f. Replicates samples: 3
g. Precision % standards: 1.0
h. Precision % samples: 1.0
i. Lamp Current: Recommended current on Hg lamp
j. Slit width: 0.5R nm
k. Reslope rate: 50
l. Reslope standard: number 2

Wavelength selection for standards, samples, and blanks

a. 253.7 nm

Calibration Varian AA 240FS and VGA

a. Type: Linear
b. Calibration standards: Prepare calibration standards and blanks so that the acid content of the sample matrices are mimicked. However do not compensate for hydrogen peroxide as it seems to keep the analysis from working properly. Prepare a total of one standard blank and three standards with varying concentrations of each desired analyte

Milestone Ethos EZ microwave digestion system

Heat and time: Heat to 200°C and hold temperature during a 20 minute interval. Followed by a 10 minute cooling period

Microwave power: 1200W (500 W for 3 vessels or less)

Rotor: SK-10

CURRENT DATE OF REVISION
MT 600 SECTION
INFORMATION AND FIELD SAMPLING PROCEDURES

Test Method No.	Title	Pages	Date of Publication or Revision
MT 601	Materials Sampling, Testing and Acceptance Guide Index	146 pp.	Sep 2016
MT 602	Independent Assurance and Final Record Sampling	6 pp.	Apr 2013
MT 603	Definitions (formerly MT 501)	8 pp.	Jun 2010
MT 604	Conversion Tables (formerly MT 502)	1 pp.	Jun 2004
MT 605	Samples and Certifications (formerly MT 503)	1 pp.	Jun 2004
MT 606	Random Sampling Techniques (formerly MT 416)	8 pp.	Jun 2004
MT 607	Procedure for Reducing Field Samples to Testing Size (formerly MT 417)	3 pp.	Jun 2004
MT 608	Voids Table (formerly MT 505)	1 pp.	Jun 2004
MT 609	Field Numbering Concrete Cylinders (formerly MT 510)	2 pp.	Feb 2016
MT 610	Numbering Subgrade Material, Surfacing Material, Bituminous Treated Material and Liquid Asphalt (formerly MT 512)	1 pp.	Jun 2004
MT 611	A Guide for Laboratory Forms (formerly MT 513)	2 pp.	Jun 2004

METHODS OF SAMPLING AND TESTING
MT 601-16
MATERIALS SAMPLING, TESTING AND ACCEPTANCE GUIDE

1 Scope

This procedure is intended to assist in determining the basis of sampling, testing, inspecting, and accepting various materials and products commonly used on highway projects.

Within this procedure is a table informing the user what tests should be performed on a particular material; the sample size; rate and frequency of sampling; responsibility for sampling, testing, collecting certification, or visually inspecting the material; and special instructions or information.

2 General

Various materials are listed in the MT 601 Table. The basis of acceptance for these materials may vary depending on the specifications, procedures or circumstances relating to these materials.

The MT 601 Table is divided into material categories, such as Aggregate, Aggregate Surfacing, etc. The user is able to click on a category to expose a table containing materials that fall within that category. Also included on each page is a link to MDT Specifications. MT 601 Table contains:

- Name of the material.
- The material code that corresponds to SiteManager.
- Tests that are routinely performed on materials for project acceptance. When possible, tests are hyperlinked to their procedure.
- Sample size required to perform the testing.
- Rate and frequency samples are to be collected.
- Responsible party for witnessing/collecting samples, collecting certifications, visually inspecting material and/or testing material.
- Notes containing special instructions or information.

3 Material Acceptance Methods

There are numerous methods for determining if a material is acceptable (i.e., meet contract requirements). The basis for acceptance of a material is defined in the contract. The SiteManager term for each acceptance method is provided in parentheses.

- Sample/Test Results (Test Results): Utilized when only test results are required to verify material quality.
- Sample/Test Results and Certification (Test Results & Certification): Utilized when test results and certification and/or visual inspection are required to verify material quality.
- Qualified Products (Approved Materials): Utilized for materials that have been approved for inclusion on MDT's QPL.
- Certification/Visual Inspection (Certification/Visual Inspection): Utilized when there is only a certification and/or visual inspection required.
- Final Record: Sample and tests taken from completed portions of a project to spot check the results obtained for contract compliance.
- Pre-Inspection: Utilized for materials tested and inspected prior to project delivery
- Mix Design: Utilized for the approval or verification of material properties and mix proportions

3.1 Sample/Test Results

Assure that the material to be incorporated into the work is sampled at the appropriate frequency. The contractor is responsible for collecting a representative sample when applicable.

All major items to be sampled and tested are listed by category in the MT 601 Table with instructions for sample size, rate/frequency of testing, sampling/witnessing and testing

responsibility, and any special instructions. Whenever a conflict exists between a particular test method and MT 601, MT 601 will govern.

Acceptance - Department personnel or authorized representative will witness samples collected by the contractor.

Quality Assurance (QA) **–** Perform sampling for QA according to the Montana Materials Manual of Test Procedures, Montana Standard Specifications for Road and Bridge Construction manual and any applicable Supplemental Specifications for the item to be sampled. Department personnel or authorized representative will witness samples collected by the contractor.

Independent Assurance (IA) **-** The Department requires all witnessing/sampling and testing for Independent Assurance purposes be accomplished by Department personnel or authorized representatives. IA samples must be collected under the direct supervision of the Materials Supervisor or their authorized representative and must not be scheduled on such an inflexible and regular routine that its frequency can be predicted; however, sufficient samples must be submitted to satisfy the frequency intended. There are two types of IA's: Comparison Testing and Procedural Checks. Independent Assurance is highlighted within the MT 601 Table in blue. Specifics on the IA procedure can be found in MT 602 Acceptance, Independent Assurance and Final Record Sampling.

3.1.1 Small Quantity Items

Projects requiring only small quantities of materials may not require standard acceptance sampling and testing. Items such as Commercial Plant Mix under 500 tons, paint less than 25 gallons and minor quantities of concrete are examples. When items are designated as small quantities by the Project Manager, their acceptance will be based upon proper documentation, such as concrete mix design approvals, air and slump test results, aggregate gradation results, etc. The Project Manager will document in SiteManager (in the Contract Sampling and Testing window) the reason items or materials are accepted on small quantities. Buy America requirements apply to items designated as Small Quantities.

3.1.2 Optional Samples

All materials incorporated into the project, whether represented by actual samples or by certification, are subject to final field inspection and acceptance by the Project Manager. MDT's Project Manager has the option to obtain more than the required minimum number of samples and to submit as many additional samples as deemed necessary to ensure conformance to specifications.

3.1.3 Maintenance Samples

Assure the material to be incorporated into the work is sampled at the appropriate interval and/or certification of materials provided meet requirements of the maintenance contract.

3.1.4 Preconstruction Samples

Samples taken prior to contract work beginning for the planning and developing of construction projects.

3.2 Sample/Test Results and Certification

Assure that the material to be incorporated into the work is sampled at the appropriate interval and the contractor is responsible for taking a representative sample. Contractor provided certification of material is required for project acceptance.

3.3 Qualified Products (Approved Materials)

The Materials Bureau maintains the Qualified Products List (QPL). MDT confirms the materials appearing on the QPL meet the specifications described in the product specific item. Some

materials may be accepted through the QPL or by product specific testing. Materials that are required to be on the QPL are highlighted in yellow within the table. Specifics on the QPL program can be found at the following link: MDT's Qualified Products List.

3.4 Certification/Visual Inspection

Acceptance of an established product may be made by the field, based on Certificate of Compliance (Cert of Comp) or Product Data Sheet (Data Sheet), visual inspection of the material's condition and/or previous satisfactory field performance. When a Cert of Comp or Data Sheet is required, the inspector must verify that the material received matches the Cert of Comp or Data Sheet and meets the contract requirements.

- **Certificates of Compliance** – state the material meets the contract requirements. A manufacturer's authorized representative **must <u>sign</u>** the certificate. Clearly identify each lot of certified materials or assemblies delivered to the work in the Certificate of Compliance. Materials or assemblies used on the basis of Certificates of Compliance may be sampled and tested at any time. Materials not meeting contract requirements will be rejected.

- **Product Data Sheets** – describes the mechanical, thermal, physical, chemical, and specific properties of the product. Product Data Sheets must contain relevant standards, test methods, and results for applicable materials and subcomponents showing products to be in compliance with contract requirements.

3.4.1 Buy America

Standard Specification 106.09, 23 USC Section 313, and 23 CFR 635.410 apply to all steel and iron items designated for permanent incorporation into all MDT projects. Items designated as Category 1 or 2 will be verified as described below. For all other items documentation will be required upon request.

- Items designated as ***Category 1*** require supporting documentation showing all steps of manufacturing as being completed in the U.S. This includes the Mill Test Report from the original producing steel mill and certifications documenting the manufacturing processes for all subsequent fabrication, including coatings.

- Items designated as ***Category 2*** must have all manufacturing processes completed in the U.S.; however, to address concerns with excessive documentation, products may be certified as domestic by the fabricator. Certification by the fabricator must consist of a statement that all materials have been melted and manufactured in the U.S. and are required to be **<u>signed</u>** by a fabricator representative. The Department reserves the right to request additional information and documentation to verify accuracy of statement.

Material requirements for Buy America are identified on the Index table and are highlighted in gray within the table. Tests labeled as Steel Cert Category 1 and 2 are linked to MDT's Form 406 - Contractors Certificate of Compliance for Miscellaneous Steel and Iron Items.

3.5 Final Records

Final Record (FR) **-** Samples must be taken by or under the direct supervision of the Materials Supervisor or their authorized representative and must not be scheduled on such an inflexible and regular routine that its frequency can be predicted, but sufficient samples must be submitted to satisfy the frequency intended. FR samples are to be taken in accordance with the following link: MT 602 Acceptance, Independent Assurance and Final Record Sampling.

3.6 Pre-Inspection

Pre-Inspected items consist of products that undergo detailed inspections at the point of manufacture or products that are fabricated by Department Certified Plants as listed on the QPL. The purpose of Pre-Inspection is to verify that processes and materials used during fabrication meet Department requirements. One process the Department uses to accomplish this is by

having a Department representative present during production to witness, sample, and test materials used. Another process the Department uses is Department Certified Plants. Department Certified Plants are producers employing internal quality control measures with an acceptable track record relating to product quality. The Department assures quality products are being produced at Department Certified Plants by implementing a combination of plant inspections, quality control system reviews, and Department witnessed or Department performed sampling and testing.

The Department representative performing pre-inspection of precast concrete products and prefabricated steel products verifies the fabricator is maintaining the supporting documentation regarding steel materials. Pre-inspected precast and prefabricated products delivered to the project must be accompanied by certification from the manufacturer stating all steel used in the product has been melted and manufactured in the United States and the fabricator has maintained supporting documentation. The Contractor is required to submit a Form 406 is when inspection of the product is made at the point of production and with certification by the plant that all steel incorporated has been melted and manufactured in the United States. All supporting documentation must be maintained by the fabricator.

Pre-inspection does not constitute project acceptance. The field is responsible for final inspection and acceptance; pre-inspected products identified as not meeting contract requirements may be subject to rejection.

3.7 Mix Designs

Mix designs are submitted to MDT Helena Materials Bureau for verification and/or approval. Samples are submitted to determine if the quality of the materials and mix proportions conform to the plans and specifications. Mix Designs are highlighted within the tables in green.

4 Submittals, Documentation and Reports

A Sampling Checklist Report in SiteManager will be generated at the beginning of each contract. This report will show the material to bid item association. It will also show who is responsible for witnessing/sampling and testing the material, the sample size per unit, how many samples need to be taken, how many samples have been taken, and if there are any sample deficiencies.

Once an individual takes or witnesses a sample, a sample record is created using the Sample Information window in SiteManager. When a sample or certification must be sent to the District/Area lab or the Helena Materials Bureau, a screenshot of the “Basic Sample Data” tab is printed out and included with/or attached to the material and/or any required certification sheets . Materials are tested and the results are entered in the Test tab of the Sample Information window in SiteManager.

Once the sample record is authorized, a report will be generated containing the test results. These reports are e-mailed to the appropriate personnel per a distribution list.

MATERIAL INDEX

C - Requires Certificate of Compliance
D - Requires Product Data Sheet
BAC1 - Requires Buy America Category 1 Certification
BAC2 - Requires Buy America Category 2 Certification
QPL - Accepted only from the Qualified Products List

			Material Code	Aggregate (AGGR)	Page
			701.01.01.01	Fine Concrete Aggregate - During Production	13
			701.01.01.01	Fine Concrete Aggregate - Source	13
			701.01.02.01	Coarse Concrete Aggregate Grade 2 - During Production	14
			701.01.02.01	Coarse Concrete Aggregate Grade 2 - Source	14
			701.01.02.02	Coarse Concrete Aggregate Grade 4 - During Production	15
			701.01.02.02	Coarse Concrete Aggregate Grade 4 - Source	15
			701.01.03.01	Combined/Intermediate Concrete Aggregate - During Production	16
			701.01.03.01	Combined/Intermediate Concrete Aggregate - Source	16
			701.04.01.01	Bedding Material	17
			701.04.02.01	Foundation Material	17
			701.05.00.01	Filter Material Number 1	18
			701.05.00.02	Filter Material Number 2	18
			701.06.02.01	Rip Rap Class 1	18
			701.06.02.02	Rip Rap Class 2	18
			701.06.02.03	Rip Rap Class 3	18
			701.07.00.01	Bank Protection Type 1	19
			701.07.00.02	Bank Protection Type 2	19
			701.07.00.03	Bank Protection Type 3	19
			701.07.00.04	Bank Protection Type 4	19
			701.08.00.01	Sand - Gravel Cushion	20
			701.10.00.01	Drain Aggregate	20
C			701.11.00.01	Glass Cullet	20
			701.09.00.01	Retaining Wall Backfill	21
			701.09.00.02	MSE Wall Backfill	22
			701.13.00.01	Bridge End Backfill Type 1	23
			701.13.00.02	Bridge End Backfill Type 2	23
			701.13.00.03	Bridge End Backfill Type 3	24
			PC 1	Proposed Surfacing (Gravel Pit)	25
			PC 2	Soils for Soil Survey	26

			Material Code	Aggregate Surfacing (AGGS)	Page
			301.03.06.01	Shoulder Gravel	27
			302.03.01.01	Pulverize/Milled Bituminous Pavement	27
				Traffic Gravel	27
			701.02.03.01	Sand Surfacing Grade 4	28
			701.02.04.01	Crushed Base Coarse Grade 5A	29
			701.02.04.02	Crushed Base Coarse Grade 6A	30
			701.02.06.01	Crushed Top Surfacing Grade 2A	31
			701.02.07.01	Crushed Top Surfacing Grade 3B	32
			701.02.08.01	Crushed Cover Aggregate Type 2 (old Grade 2A)	33
			701.02.08.02	Crushed Cover Aggregate Type 1 (old Grade 4A)	34
			701.02.08.05	Crushed Cover Aggregate Type 3	35
			701.02.08.03	Slurry Seal Aggregate	36
			701.02.08.04	Microsurfacing Aggregate	36
			701.02.09.01	Cement Treated Base	37

MATERIAL INDEX

			Material Code	Bearing Devices (BEAR)	Page
D	BAC2		565.02.00.01	Elastomeric Bearing Devices	38
D			565.02.00.02	Polytetrafluoroethylene (PTFE)	38
D			565.02.00.03	Fiber Reinforced Pads	38

			Material Code	Bituminous (BITM)	Page
C			702.02.01.01	Anionic Slow Set Emulsion SS-1	39
C			702.02.01.02	Cationic Slow Set Emulsion CSS-1	39
C			702.02.01.03	Cationic Slow Set Emulsion CSS-1H	40
C			702.02.05.01	Medium Curing Liquid Asphalt MC-800	40
C		QPL	702.02.05.02	Medium Curing Liquid Asphalt MC-70	41
C			702.02.07.01	High Float Emulsion HF-100	41
C			702.02.08.01	Polymer Mod. Cat. Rapid Set Emulsion CRS-2P	41
C			702.02.08.02	Cationic Rapid Setting Emulsion CRS-2	42
C			702.02.08.03	Cationic Quick Setting Emulsion CQS-1h	42
C			702.02.09.06	Performance Graded Asphalt Binder 58-28	43
C			702.02.09.09	Performance Graded Asphalt Binder 64-22	44
C			702.02.09.10	Performance Graded Asphalt Binder 64-28	45
C			702.02.09.12	Performance Graded Asphalt Binder 70-28	46

			Material Code	Bituminous Prime and Tack Coat (BPTC)	Page
			407.02.02.01	Blotter Material	47

			Material Code	Concrete and Structures (CONC)	Page
D		QPL	551.02.01.01	Portland Cement	48
D		QPL	551.02.01.02	Blended Cement	48
D		QPL	551.02.03.01	Concrete Admixture	48
D			551.02.04.01	Epoxy Adhesives	48
D		QPL	551.02.10.01	Fly Ash	48
D		QPL	551.02.11.01	Microsilica/Silica Fume	48
D		QPL	551.02.12.01	Metakaolin	49
D		QPL	551.02.13.01	Ground Granulated Blast Furnace Slag (GGBFS)	49
			551.03.02.01	Shotcrete	49
			551.03.02.02	Class General Concrete	50
			551.03.02.03	Class Pave Concrete	51
			551.03.02.04	Class Pre Concrete	53
			551.03.02.05	Class SCC Concrete	54
			551.03.02.06	Class Deck Concrete	56
			551.03.02.07	Class Overlay-SF Concrete	57
			551.03.02.08	Class Overlay-LM Concrete	58
			551.03.02.09	Class Structure Concrete	59
			551.03.02.10	Class Drilled Shaft Concrete	60
			551.03.02.11	Controlled Low Strength Material-Excav	61
			551.03.02.12	Controlled Low Strength Material-Non-Excav	61
D			551.03.02.13	Pre-Packaged Concrete	62
			551.03.02.14	Lean Concrete	62
D			552.02.01.01	Epoxy Resin Grout	62
			552.03.16.01	Deck Drains	62
C	BAC2		553.02.08.01	Precast Prestressed Deck Sections	63
C	BAC2		553.02.09.01	Prestressed Beam	63
C	BAC2		554.04.03.01	Precast Concrete Bridge Members	64

MATERIAL INDEX

	BAC2		554.04.04.01	Cattle Guard Bases	64
C	**BAC2**		554.04.06.01	Precast Concrete Product - Structural	65
	BAC2		554.04.06.02	Precast Concrete Product - Non Structural	65
D			563.02.01.08	Waterproof Membrane	65

			Material Code	**Concrete Sealant (CONS)**	**Page**
D			717.01.03.01	Liquid Membrane-Forming Concrete Curing Compound	66
D			717.01.04.01	Concrete Cure and Seal Compounds	66
D		**QPL**	717.02.02.01	High Molecular Weight Methacrylate (HMWM)	66
D		**QPL**	717.02.03.01	Epoxy Bridge Deck Crack Sealant	66
D		**QPL**	717.02.01.01	Silane Sealer	67
D			717.02.04.01	Deck Sealant Sand	67

			Material Code	**Crack Sealing (CRKS)**	**Page**
D		**QPL**	403.02.00.01	Crack Sealant	68
D		**QPL**	403.02.00.02	Backer Rod	68

			Material Code	**Excavation (EXC)**	**Page**
			203.01.01.02	Special Borrow	69
			203.01.02.01	Embankment	70
			203.03.01.01	Stemming Aggregate for Blasting	71

			Material Code	**Fencing (FNC)**	**Page**
			607.02.01.01	Snow Fence Material	72
D	**BAC2**		712.01.02.01	Chain Link Fabric	72
D	**BAC2**		712.01.03.01	Chain Link Steel Post	72
D			712.01.03.03	Chain Link Aluminum Post	72
D	**BAC2**		712.01.06.01	Cable/Tie/Brace Wire	73
D	**BAC2**		712.01.08.01	Chain Link Gate	73
D	**BAC2**		712.02.00.01	Fence Wire	73
D	**BAC2**		712.02.07.01	Steel Fence Post	73
			712.02.08.01	Wood Fence Post/Brace Rail	74
D	**BAC2**		712.02.09.01	Metal Gate	74
D			712.02.12.01	Deadman/Anchor	74

			Material Code	**Geotextile (GEOT)**	**Page**
C			622.01.01.01	Geogrid - Subgrade/Foundation	75
C			622.01.01.02	Geogrid - Slope Reinforcement	75
C			622.01.01.03	Geogrid - Wall Reinforcement	75
C			622.02.01.01	Geocomposite Drain	75
D			713.06.00.01	Weed Control Mat	76
C/D		**QPL**	713.12.00.04	Turf Reinforcement Mat - Synthetic Fiber	76
C/D		**QPL**	713.12.00.05	Turf Reinforcement Mat - Natural Fiber	76
C/D		**QPL**	713.12.00.06	Short Term Rolled Erosion Control Blanket	76
C/D		**QPL**	713.12.00.07	Long Term Rolled Erosion Control Blanket	76
C/D		**QPL**	713.12.00.08	High Performance Rolled Erosion Control Blanket	77
C			716.02.00.01	Geotextile Separation High Survivability	77
C			716.02.00.02	Geotextile Separation Moderate Survivability	77
C			716.03.00.01	Geotextile Stabilization - High Survivability	78
C			716.04.00.01	Geotextile Sub Drain Class A-High Survivability	78
C			716.04.00.02	Geotextile Sub Drain Class B-High Survivability	78
C			716.04.00.03	Geotextile Sub Drain Class C-High Survivability	79
C			716.04.00.04	Geotextile Sub Drain Class A-Moderate Survivability	79
C			716.04.00.05	Geotextile Sub Drain Class B-Moderate Survivability	79

MATERIAL INDEX

C			716.04.00.06	Geotextile Sub Drain Class C-Moderate Survivability	80
C			716.04.00.07	Geosynthetic Clay Liner	80
C			716.04.00.08	Geomembrane Liner	80
C			716.05.00.01	Geotextile Permanent Erosion Control Class-A High Survivability	80
C			716.05.00.02	Geotextile Permanent Erosion Control Class-B High Survivability	81
C			716.05.00.03	Geotextile Permanent Erosion Control Class-C High Survivability	81
C			716.05.00.04	Geotextile Permanent Erosion Control Class-A Moderate Survivability	81
C			716.05.00.05	Geotextile Permanent Erosion Control Class-B Moderate Survivability	82
C			716.05.00.06	Geotextile Permanent Erosion Control Class-C Moderate Survivability	82
D			716.06.00.00	Temporary Silt Fence	82

			Material Code	Guardrail (GRD)	Page
D	BAC1		705.01.01.01	Box Beam Guardrail	83
D	BAC2		705.01.01.02	Wire Rope	83
D	BAC1		705.01.01.03	Steel Beam Guardrail	83
D	BAC2		705.01.01.05	Miscellaneous Guardrail	83
			705.01.02.01	Wood Guardrail Post/Blockouts	84
C			705.01.02.02	Non-Wood Blockouts	84
C	BAC2		705.01.05.01	Steel Guardrail Post	84
D		QPL	606.02.00.01	Mash W-Beam Terminal Section	84
C			606.03.00.01	Cert of Comp for Guardrail Items	85

			Material Code	Joint Material (JNT)	Page
D		QPL	707.01.01.01	Expansion Joint Fillers - Cork	86
D		QPL	707.01.01.02	Joint Sealing Material	86
D			707.01.02.02	Silicone Joint Seal	86
D			707.01.02.03	Fabric Reinforced Neoprene Joint Seal	86
C/D	BAC2		707.01.02.04	Expansion Joint System	86
D			707.01.02.05	Expansion Joint Asphalt Plug	87
D			707.01.03.01	Preformed Expansion Joint Filler	87
D			707.02.01.01	Gasket	87
D			707.02.02.01	Flexible Joint Sealer	87

			Material Code	Lighting, Signals & Communication (LSM)	Page
D				Variable Message Sign	88
D				Antenna	88
D	Varies		703.01.00.01	Electrical Submittal	88
D				PVC Conduit	88
D				HDPE Conduit	88
	BAC2			Steel Conduit	88
D	BAC2			Pull Boxes	89
D	BAC2			Signal Standards Type 2/3	89
D	BAC2			Luminaire Standard Type 10	89
D	BAC2			Signal Standards Type 1	89
D				Conductor	90
D				Cable	90
D				Service & Control Assembly	90
D				Traffic Signal Cabinet	90
D				Traffic Signal Indication	90
D				LED Traffic Signal	90
D				Pedestrian Signal Indication	90
D				Detector Loop	91

MATERIAL INDEX

D				Pedestrian Push Buttons	91
D				Luminaire Assembly	91
D				Emergency Vehicle Preemption	91
			703.16.00.01	Class 4 Treated Wood Poles	91
D				Guys & Anchors	91

			Material Code	Maintenance (MAIN)	Page
D			MT 1	8A-R Salt (Maintenance)	92
D			MT 3	8A-B Salt (Maintenance)	92
D			MT 10	8B Salt (Maintenance)	92
			MT 2	Salt Brine - NaCl (Maintenance)	93
D			MT 6	Corrosion Inhibitor (Maintenance)	94
D			MT 7	De-Icer - $MgCl_2$ (Maintenance)	95
D			MT 8	De-Icer - $CaCl_2$ (Maintenance)	96
D			MT 4	Sanding Material	96
D			MT 9	Cold Mix Asphalt Patching Material	97
D			MT 5	Engine Oil Analysis	97

			Material Code	Miscellaneous (MISC)	Page
D			405.01.01.01	Quick Lime	98
D	BAC2	QPL	608.03.02.01	Detectable Warning Devices	98
C	BAC2		611.02.04.01	Cattle Guard (Grate)	98
D			613.03.05.01	Concrete Filled Bag/Scrim Bag	98
D		QPL	623.02.00.01	Mail Box	99
			706.01.00.01	Structural Timber	99
D			710.02.00.01	Miscellaneous Paint	99
D			710.02.00.02	Aluminum Epoxy	99
D			710.02.00.03	Pipe Pile Epoxy	99
D			710.02.03.01	Zinc Rich Primer	100
C			710.03.00.01	Powder Coating	100
D		QPL	710.04.00.01	Anti-Graffiti Coating	100
C/D			713.00.00.00	Miscellaneous Material Accepted on Cert	100
			713.01.00.01	Water for Concrete	100
D			713.02.00.01	Hydrated Lime	101
D			713.03.00.01	Calcium Chloride	101
D			713.03.00.02	Magnesium Chloride	101
D			713.04.01.01	Mortar Sand	101
D			713.04.01.02	Cement Grout	102
			713.05.02.01	Topsoil	102
			713.05.02.02	Landscape Grade Topsoil	102
D			713.08.01.01	Seed	102
D			713.09.00.01	Fertilizer	103
C/D		QPL	713.10.01.01	Mulch	103
			713.10.03.01	Fabricated Netting	103
D			713.11.00.01	Sod	103
C/D		QPL	713.13.01.01	Compost	103
			MCS 1	Dyed Diesel	103

			Material Code	Pavement Markings (PMM)	Page
D		QPL	714.03.00.02	Temporary Paint	104
D		QPL	714.04.00.03	Waterborne Paint (previously 714.07.01.01)	104
D		QPL	714.05.00.03	High Durable Waterborne Paint	104

MATERIAL INDEX

D		QPL	714.06.00.02	Epoxy Paint (previously 714.08.00.01)	104
D			714.07.00.01	Preformed Plastic (previously 714.03.00.01)	104
D		QPL	714.08.00.02	Reflective Glass Beads - MT Type 1	105
D		QPL	714.08.00.03	Reflective Glass Beads - MT Type 2	105

			Material Code	Pile (PILE)	Page
C	BAC2		559.04.06.01	Pile Driving Point	106
C	BAC2		559.04.06.02	Pile Cutting Shoe	106
C	BAC1		711.10.01.01	Structural Steel Piles	106
C	BAC1		711.10.02.01	Steel Pipe Piles	107
C	BAC1		711.10.03.01	Steel Fluted Piles	107

			Material Code	Pipes (PIPE)	Page
	BAC2		708.01.01.01	Reinforced Concrete Pipe	108
	BAC2		708.02.00.01	Concrete Pressure Pipe	108
D			708.05	Plastic Pipe	108
D			708.06	Plastic Pipe	108
D			708.07	Plastic Pipe	108
D			708.08	Plastic Pipe	108
D	BAC2		709.01.01.01	Ductile Iron Water Pipe	109
C/D	BAC2		709.01.02.01	Steel Water Pipe	109
D	BAC2		709.02.00.01	Corrugated Steel Pipe	109
D	BAC2		709.03.00.01	Steel Structural Plate Pipe	109
D			709.07.00.01	Corr Aluminum Pipe Culvert	110
C/D	BAC2		709.09.00.01	Seamless Steel Pipe	110
D			709.10.00.01	Copper Pipe	110
			PC 3	Pipe Inspection for Pipe Survey	110

			Material Code	Plant Mix Pavement (PMP)	Page
D		QPL	401.02.04.01	Warm Mix Additives	111
D			401.02.05.01	Anti-Stripping Additive	111
			401.03.01.01	Plant Mix Surfacing Grade S (3/4")	112
			401.03.01.02	Plant Mix Surfacing Grade S (1/2")	115
			401.03.01.06	Plant Mix Surfacing Grade S (3/8")	118
			401.03.01.03	Plant Mix Surfacing Grade D	121
			401.03.01.05	Plant Mix Seal Course	124
C			401.03.02.01	EPA Specification Used Oil Fuel	126
			405.01.21.01	Cold Recycled Plant Mix	126
C			405.02.01.01	Cold In-Place Recycled - Engr Emulsion	126
			PC 4	Cores for Stripping Analysis	126

			Material Code	Signing (SIGN)	Page
D			619.03.08.02	Snow Pole	127
D			704.01.01.01	Signing Sheet Aluminum	127
D	BAC2		704.01.04.01	Steel Sign Posts	127
D	BAC2		704.01.04.02	Structural Steel Sign Posts	127
D			704.01.04.05	Aluminum Sign Posts	127
D	BAC2	QPL	704.01.04.06	Breakaway Devices	128
			704.01.06.01	Wood Posts & Poles	128

MATERIAL INDEX

	BAC1		704.01.08.01	Overhead Structures	128
D			704.01.10.01	Retro-Reflective Sheeting	128
D		QPL	704.03.00.01	Surface Mount Flexible Delineators	129
D	BAC2	QPL	704.03.00.02	Drivable Flexible Delineators	129
			Material Code	**Steel (STL)**	**Page**
D	BAC2	QPL	501.02.03.01	Smooth Dowel Bars	130
D			501.02.03.02	Dowel Bar Sleeve	130
D	BAC2	QPL	501.02.04.01	Tie Bars, Grade 40	130
D	BAC2	QPL	711.01.01.01	Rebar Grade 40	130
D	BAC2	QPL	711.01.01.02	Rebar Grade 60	130
D	BAC2	QPL	711.01.01.04	Rebar Grade 75	131
D	BAC2		711.01.01.03	Mechanical Rebar Connectors	131
D		QPL	711.01.02.01	Rebar Epoxy Coating	131
D	BAC2	QPL	711.01.03.01	Reinforcing Wire, Wire Mesh	131
C/D	BAC1		711.02.00.01	Structural Steel	131
C/D	BAC1		711.03.00.01	Structural Steel Tubing	132
D	BAC1		711.04.00.01	Pins & Rollers	132
	BAC2		711.06.00.01	High Tensile Strength Bolts	132
			711.07.00.01	Bolts, Nuts, Threaded Rod	132
D	BAC2		711.08.00.01	Galvanized Metal	133
C/D	BAC2		711.09.00.01	Welded Stud Shear Connectors	133
D	BAC2		711.11.00.01	Prestressing Steel	133
D	BAC2		711.12.01.01	Steel Castings	134
D	BAC2		711.12.03.01	Miscellaneous Drainage Castings	134
D	BAC2	QPL	711.12.03.02	Cast Inlet Grates	134
D	BAC2		711.13.00.01	Structural Anchor Bolts	134
D	BAC2		711.17.00.01	Metal Bin-Type Retaining Walls	134
D	BAC2		711.18.00.01	Rock/Soil Anchor	135
D	BAC2		711.21.00.01	High Strength Wire Rockfall Mesh	135
			Material Code	**Stream Preservation (STPR)**	**Page**
C/D			208.02.00.01	Temporary Rolled Erosion Control	136
D			208.02.01.01	Plants - Trees & Shrubs	136
			208.02.02.01	Log	136
			208.02.02.02	Root Wad	136
			208.02.02.03	Stream Preservation	136
			208.02.03.01	Streambed Aggregate	136
			Material Code	**Crash Testing (CRSH)**	**Page**
C			618.03.02.01	Cert of Comp for Traffic Control/Mailbox	137
				Building Materials (BM)	
			Material Code	**Structure Material (STR)**	**Page**
			BM.699.01.01	Bird Spikes	138
D			BM.699.01.02	Glue Laminated Beams	138
D			BM.699.01.03	Insulation	138
D	BAC2		BM.699.01.04	Metal Roofing	138
D	BAC2		BM.699.01.05	Metal Siding & Soffit	138
D			BM.699.01.06	Picnic Shelter (Non Precast)	139
D			BM.699.01.07	Quarry Tile	139
D	BAC2		BM.699.01.08	Roof Joist	139
D			BM.699.01.09	Interior/Exterior Building Tape & Paint	139

MATERIAL INDEX

			BM.699.01.10	Masonry/Through Wall Flashing	140
D			BM.699.01.11	Pre-Packaged Mortar	140
D			BM.699.01.12	CMU	140
D			BM.699.01.13	SRW Block	140
D			BM.699.01.14	Masonry Siding	141
D			BM.699.01.15	Interior/Exterior Glass and Glazing	141
			Material Code	**Electrical/Mechanical (ELMC)**	**Page**
D			BM.699.02.01	Electrical	141
D			BM.699.02.02	HVAC System	141
			BM.699.02.03	Interior Fixtures & Features	142
D	BAC2		BM.699.02.04	Propane Tank	142
			Material Code	**Plumbing (PLMB)**	**Page**
D			BM.699.03.01	Irrigation System	142
D			BM.699.03.02	Plumbing	142
D			BM.699.03.03	Waste Water Treatment System	143
D			BM.699.03.04	Waste Water Utility Pipe & Appurtenance	143
D			BM.699.03.05	Waste Water Pumps, Fittings & Valves	143
D			BM.699.03.07	Well Pumps, Fittings & Valves	143
			Material Code	**Accessories (ACC)**	**Page**
D			BM.699.04.01	Benches (Non Precast)	143
D			BM.699.04.02	Picnic Tables (Non Precast)	144
D			BM.699.04.03	Trash Receptacles (Non Precast)	144
D			BM.699.04.04	Fire Extinguishers & Cabinets	144
D			BM.699.04.05	Flag Poles (Aluminum)	144
			BM.699.04.06	Toilet Room Accessories	144
			Material Code	**Door/Display (DRDP)**	**Page**
D			BM.699.05.01	Aluminum Storefront	145
D			BM.699.05.02	Display Cases	145
			BM.699.05.03	Hollow Metal Doors & Frames	145
D			BM.699.05.04	Overhead Garage Doors	145
			Material Code	**Scale Site Specific (SSS)**	**Page**
D	BAC2		BM.699.06.01	Scale Pit Structural Items	146
D			BM.699.06.02	Scale Electronics, Transducers, and Displays	146

MATERIAL/ MATERIAL CODE	TESTS	SAMPLE SIZE	SAMPLE/TEST FREQUENCY	FIELD	DISTRICT/ AREA LAB	MDT HQ LAB	NOTES
FINE CONCRETE AGGREGATE - DURING PRODUCTION 701.01.01.01	MT 201 SAMPLING	30 LBS (14 KG)	PAVING: ONE TEST PER EVERY 1000 CU YDS (750 M^3) OTHER: ONE SAMPLE FOR EACH 200 CU YDS (150 M^3) OF CONCRETE WITH A MINIMUM OF ONE SAMPLE PER PROJECT	SAMPLE			
	MT 202 SIEVE ANALYSIS			TEST			
	INDEPENDENT ASSURANCE (COMPARISON TESTING)			**FIELD**	**DISTRICT/ AREA LAB**	**MDT HQ LAB**	**NOTES**
	MT 202 SIEVE ANALYSIS	USE FIELD TESTED SAMPLE	PAVING: ONE SAMPLE FOR EACH TWO LANE MILE (1.6 KM), MINIMUM OF ONE SAMPLE FOR PROJECTS LESS THAN ONE MILE OTHER: AT LEAST ONE SAMPLE FOR EVERY 4 SAMPLES, MINIMUM OF ONE PER PROJECT/CONTRACT		TEST	TEST	

MATERIAL/ MATERIAL CODE	TESTS	SAMPLE SIZE	SAMPLE/TEST FREQUENCY	FIELD	DISTRICT/ AREA LAB	MDT HQ LAB	NOTES
FINE CONCRETE AGGREGATE - SOURCE 701.01.01.01	MT 201 SAMPLING	50 LBS (23 KG)	PROPOSED SOURCE: THREE 50 LB (23 KG) COMPOSITE SAMPLES FROM EACH SOURCE		SAMPLE		
	MT 202 SIEVE ANALYSIS				TEST	TEST	
	AASHTO T 21 ORGANIC IMPURITIES IN FINE AGGREGATE						
	MT 203 UNIT WEIGHT						
	MT 204 SPECIFIC GRAVITY						
	AASHTO T 104 SOUNDNESS SODIUM SULFATE (FINE AGG)						

MATERIAL/ MATERIAL CODE	TESTS	SAMPLE SIZE	SAMPLE/TEST FREQUENCY	FIELD	DISTRICT/ AREA LAB	MDT HQ LAB	NOTES
COARSE CONCRETE AGGREGATE GRADE 2 - DURING PRODUCTION 701.01.02.01	MT 201 SAMPLING	30 LBS (14 KG)	PAVING: ONE TEST PER EVERY 1000 CU YDS (750 M^3) OTHER: ONE SAMPLE FOR EACH 200 CU YDS (150 M^3) OF CONCRETE WITH A MINIMUM OF ONE SAMPLE PER PROJECT	SAMPLE			
	MT 202 SIEVE ANALYSIS			TEST			
	INDEPENDENT ASSURANCE (COMPARISON TESTING)			**FIELD**	**DISTRICT/ AREA LAB**	**MDT HQ LAB**	**NOTES**
	MT 202 SIEVE ANALYSIS	USE FIELD TESTED SAMPLE	PAVING: ONE SAMPLE OF EACH SIZE FOR EACH TWO LANE MILE (1.6 KM), MINIMUM OF ONE SAMPLE FOR PROJECTS LESS THAN ONE MILE OTHER: AT LEAST ONE SAMPLE FOR EVERY 4 SAMPLES, MINIMUM OF ONE PER PROJECT/CONTRACT		TEST	TEST	

MATERIAL/ MATERIAL CODE	TESTS	SAMPLE SIZE	SAMPLE/TEST FREQUENCY	FIELD	DISTRICT/ AREA LAB	MDT HQ LAB	NOTES
COARSE CONCRETE AGGREGATE GRADE 2 - SOURCE 701.01.02.01	MT 201 SAMPLING	50 LBS (23 KG)	PROPOSED SOURCE: THREE 50 LB (23 KG) COMPOSITE SAMPLES FROM EACH SOURCE		SAMPLE		
	MT 202 SIEVE ANALYSIS				TEST	TEST	
	MT 203 UNIT WEIGHT						
	AASHTO T 104 SOUNDNESS SODIUM SULFATE						
	MT 205 SPECIFIC GRAVITY						
	MT 209 LOS ANGELES ABRASION						

MATERIAL/ MATERIAL CODE	TESTS	SAMPLE SIZE	SAMPLE/TEST FREQUENCY	FIELD	DISTRICT/ AREA LAB	MDT HQ LAB	NOTES
COARSE CONCRETE AGGREGATE GRADE 4 - DURING PRODUCTION 701.01.02.02	MT 201 SAMPLING	30 LBS (14 KG)	ONE SAMPLE FOR EACH 200 CU YDS (150 M^3) OF CONCRETE WITH A MINIMUM OF ONE SAMPLE PER PROJECT	SAMPLE			
	MT 202 SIEVE ANALYSIS			TEST			
	INDEPENDENT ASSURANCE (COMPARISON TESTING)			**FIELD**	**DISTRICT/ AREA LAB**	**MDT HQ LAB**	**NOTES**
	MT 202 SIEVE ANALYSIS	USE FIELD TESTED SAMPLE	PAVING: ONE SAMPLE OF EACH SIZE FOR EACH TWO LANE MILE (1.6 KM), MINIMUM OF ONE SAMPLE FOR PROJECTS LESS THAN ONE MILE STRUCTURES: AT LEAST ONE SAMPLE FOR EVERY 4 SAMPLES, MINIMUM OF ONE PER PROJECT/CONTRACT		TEST	TEST	

MATERIAL/ MATERIAL CODE	TESTS	SAMPLE SIZE	SAMPLE/TEST FREQUENCY	FIELD	DISTRICT/ AREA LAB	MDT HQ LAB	NOTES
COARSE CONCRETE AGGREGATE GRADE 4 - SOURCE 701.01.02.02	MT 201 SAMPLING	50 LBS (23 KG)	PROPOSED SOURCE: THREE 50 LB (23 KG) COMPOSITE SAMPLES FROM EACH SOURCE		SAMPLE		
	MT 202 SIEVE ANALYSIS				TEST	TEST	
	MT 203 UNIT WEIGHT						
	AASHTO T 104 SOUNDNESS SODIUM SULFATE						
	MT 205 SPECIFIC GRAVITY						
	MT 209 LOS ANGELES ABRASION						

MATERIAL/ MATERIAL CODE	TESTS	SAMPLE SIZE	SAMPLE/TEST FREQUENCY	FIELD	DISTRICT/ AREA LAB	MDT HQ LAB	NOTES
COMBINED/ INTERMEDIATE CONCRETE AGGREGATE - DURING PRODUCTION 701.01.03.01	MT 201 SAMPLING	30 LBS (14 KG)	PAVING: ONE TEST PER EVERY 1000 CU YDS (750 M^3) OTHER: ONE SAMPLE FOR EACH 200 CU YDS (150 M^3) OF CONCRETE WITH A MINIMUM OF ONE SAMPLE PER PROJECT	SAMPLE			
	MT 202 SIEVE ANALYSIS			TEST			
	INDEPENDENT ASSURANCE (COMPARISON TESTING)			**FIELD**	**DISTRICT/ AREA LAB**	**MDT HQ LAB**	**NOTES**
	MT 202 SIEVE ANALYSIS	USE FIELD TESTED SAMPLE	PAVING: ONE SAMPLE OF EACH SIZE FOR EACH TWO LANE MILE (1.6 KM), MINIMUM OF ONE SAMPLE FOR PROJECTS LESS THAN ONE MILE OTHER: AT LEAST ONE SAMPLE FOR EVERY 4 SAMPLES, MINIMUM OF ONE PER PROJECT/CONTRACT		TEST	TEST	

MATERIAL/ MATERIAL CODE	TESTS	SAMPLE SIZE	SAMPLE/TEST FREQUENCY	FIELD	DISTRICT/ AREA LAB	MDT HQ LAB	NOTES
COMBINED/ INTERMEDIATE CONCRETE AGGREGATE - SOURCE 701.01.03.01	MT 201 SAMPLING	50 LBS (23 KG)	PROPOSED SOURCE: THREE 50 LB (23 KG) COMPOSITE SAMPLES FROM EACH SOURCE		SAMPLE		
	MT 202 SIEVE ANALYSIS				TEST	TEST	
	MT 203 UNIT WEIGHT						
	AASHTO T 104 SOUNDNESS SODIUM SULFATE						
	MT 205 SPECIFIC GRAVITY						
	MT 209 LOS ANGELES ABRASION						

MATERIAL/ MATERIAL CODE	TESTS	SAMPLE SIZE	SAMPLE/TEST FREQUENCY	FIELD	DISTRICT/ AREA LAB	MDT HQ LAB	NOTES
BEDDING MATERIAL 701.04.01.01	MT 201 SAMPLING	77 LBS (35 KG)	ONE TEST PER SOURCE	SAMPLE			
	MT 202 SIEVE ANALYSIS				TEST		
	MT 210 (5.5LB) PROCTOR						
	MT 230 (10LB) PROCTOR						
	MT 231 COARSE PARTICLE CORRECTION						PERFORMED WHEN REQUIRED PER MT 210 OR MT 230
	MT 212 COMPACTION AND % MOISTURE (IN-PLACE DENSITY)	N/A	MINIMUM OF ONE TEST PER INSTALLATION AND PER LIFT	TEST			

MATERIAL/ MATERIAL CODE	TESTS	SAMPLE SIZE	SAMPLE/TEST FREQUENCY	FIELD	DISTRICT/ AREA LAB	MDT HQ LAB	NOTES
FOUNDATION MATERIAL 701.04.02.01	MT 201 SAMPLING	77 LBS (35 KG)	ONE TEST PER SOURCE	SAMPLE			
	MT 202 SIEVE ANALYSIS				TEST		
	MT 210 (5.5LB) PROCTOR						
	MT 230 (10LB) PROCTOR						
	MT 231 COARSE PARTICLE CORRECTION						PERFORMED WHEN REQUIRED PER MT 210 OR MT 230
	MT 212 COMPACTION AND % MOISTURE (IN-PLACE DENSITY)	N/A	MINIMUM OF ONE TEST PER INSTALLATION AND PER LIFT	TEST			

MATERIAL/ MATERIAL CODE	TESTS	SAMPLE SIZE	SAMPLE/TEST FREQUENCY	FIELD	DISTRICT/ AREA LAB	MDT HQ LAB	NOTES
FILTER MATERIAL NUMBER 1 701.05.00.01	MT 201 SAMPLING	30 LBS (14 KG)	ONE TEST PER SOURCE	SAMPLE			
	MT 202 SIEVE ANALYSIS			TEST			

MATERIAL/ MATERIAL CODE	TESTS	SAMPLE SIZE	SAMPLE/TEST FREQUENCY	FIELD	DISTRICT/ AREA LAB	MDT HQ LAB	NOTES
FILTER MATERIAL NUMBER 2 701.05.00.02	MT 201 SAMPLING	77 LBS (35 KG)	ONE TEST PER SOURCE	SAMPLE			
	MT 202 SIEVE ANALYSIS			TEST			

MATERIAL/ MATERIAL CODE	TESTS	SAMPLE SIZE	SAMPLE/TEST FREQUENCY	FIELD	DISTRICT/ AREA LAB	MDT HQ LAB	NOTES
RIP RAP CLASS 1 701.06.02.01	SPEC TABLE 701-21 RANDOM RIP RAP	N/A	ONE TEST PER PROJECT	TEST			
	MDT FORM 127 RIP RAP	N/A	ONE TEST PER SOURCE	TEST			

MATERIAL/ MATERIAL CODE	TESTS	SAMPLE SIZE	SAMPLE/TEST FREQUENCY	FIELD	DISTRICT/ AREA LAB	MDT HQ LAB	NOTES
RIP RAP CLASS 2 701.06.02.02	SPEC TABLE 701-21 RANDOM RIP RAP	N/A	ONE TEST PER PROJECT	TEST			
	MDT FORM 127 RIP RAP	N/A	ONE TEST PER SOURCE	TEST			

MATERIAL/ MATERIAL CODE	TESTS	SAMPLE SIZE	SAMPLE/TEST FREQUENCY	FIELD	DISTRICT/ AREA LAB	MDT HQ LAB	NOTES
RIP RAP CLASS 3 701.06.02.03	SPEC TABLE 701-21 RANDOM RIP RAP	N/A	ONE TEST PER PROJECT	TEST			
	MDT FORM 127 RIP RAP	N/A	ONE TEST PER SOURCE	TEST			

MATERIAL/ MATERIAL CODE	TESTS	SAMPLE SIZE	SAMPLE/TEST FREQUENCY	FIELD	DISTRICT/ AREA LAB	MDT HQ LAB	NOTES
BANK PROTECTION TYPE 1 701.07.00.01	SPEC TABLE 701-22 BANK PROTECTION	N/A	ONE TEST PER PROJECT	TEST			
	CERT/VISUAL INSPECTION	N/A	ONE TEST PER SOURCE	VISUAL			

MATERIAL/ MATERIAL CODE	TESTS	SAMPLE SIZE	SAMPLE/TEST FREQUENCY	FIELD	DISTRICT/ AREA LAB	MDT HQ LAB	NOTES
BANK PROTECTION TYPE 2 701.07.00.02	SPEC TABLE 701-22 BANK PROTECTION	N/A	ONE TEST PER PROJECT	TEST			
	CERT/VISUAL INSPECTION	N/A	ONE TEST PER SOURCE	VISUAL			

MATERIAL/ MATERIAL CODE	TESTS	SAMPLE SIZE	SAMPLE/TEST FREQUENCY	FIELD	DISTRICT/ AREA LAB	MDT HQ LAB	NOTES
BANK PROTECTION TYPE 3 701.07.00.03	SPEC TABLE 701-22 BANK PROTECTION	N/A	ONE TEST PER PROJECT	TEST			
	CERT/VISUAL INSPECTION	N/A	ONE TEST PER SOURCE	VISUAL			

MATERIAL/ MATERIAL CODE	TESTS	SAMPLE SIZE	SAMPLE/TEST FREQUENCY	FIELD	DISTRICT/ AREA LAB	MDT HQ LAB	NOTES
BANK PROTECTION TYPE 4 701.07.00.04	SPEC TABLE 701-22 BANK PROTECTION	N/A	ONE TEST PER PROJECT	TEST			
	CERT/VISUAL INSPECTION	N/A	ONE TEST PER SOURCE	VISUAL			

MATERIAL/ MATERIAL CODE	TESTS	SAMPLE SIZE	SAMPLE/TEST FREQUENCY	FIELD	DISTRICT/ AREA LAB	MDT HQ LAB	NOTES
SAND - GRAVEL CUSHION 701.08.00.01	MT 201 SAMPLING	77 LBS (35 KG)	ONE TEST PER SOURCE	SAMPLE			
	MT 202 SIEVE ANALYSIS				TEST		
	MT 210 (5.5LB) PROCTOR						
	MT 230 (10LB) PROCTOR						
	MT 231 COARSE PARTICLE CORRECTION						PERFORMED WHEN REQUIRED PER MT 210 OR MT 230
	MT 212 COMPACTION AND % MOISTURE (IN-PLACE DENSITY)	N/A	MINIMUM OF ONE TEST PER INSTALLATION	TEST			

MATERIAL/ MATERIAL CODE	TESTS	SAMPLE SIZE	SAMPLE/TEST FREQUENCY	FIELD	DISTRICT/ AREA LAB	MDT HQ LAB	NOTES
DRAIN AGGREGATE 701.10.00.01	MT 201 SAMPLING	77 LBS (35 KG)	ONE TEST PER PROJECT	SAMPLE			
	MT 202 SIEVE ANALYSIS				TEST		

MATERIAL/ MATERIAL CODE	TESTS	SAMPLE SIZE	SAMPLE/TEST FREQUENCY	FIELD	DISTRICT/ AREA LAB	MDT HQ LAB	NOTES
GLASS CULLET 701.11.00.01	CERT/ VISUAL INSPECTION	1 EACH	ONE PER PROJECT	CERT OF COMP			

MATERIAL/ MATERIAL CODE	TESTS	SAMPLE SIZE	SAMPLE/TEST FREQUENCY	FIELD	DISTRICT/ AREA LAB	MDT HQ LAB	NOTES
RETAINING WALL BACKFILL 701.09.00.01	MT 201 SAMPLING	77 LBS (35 KG)	ONE TEST PER SOURCE	SAMPLE			
	MT 202 SIEVE ANALYSIS				TEST		
	MT 208 LIQUID LIMIT						
	MT 208A PLASTIC LIMIT & PLASTICITY INDEX						
	MT 217 FRACTURE						
	MT 214 SOIL CLASS						
	MT 210 (5.5LB) PROCTOR						
	MT 230 (10LB) PROCTOR						
	MT 231 COARSE PARTICLE CORRECTION						PERFORMED WHEN REQUIRED PER MT 210 OR MT 230
	AASHTO T 104 SOUNDNESS SODIUM SULFATE	30 LBS (14 KG)	ONE TEST PER SOURCE	SAMPLE		TEST	TEST MAY BE REQUIRED PER SPECIAL PROVISION
	AASHTO T 267 ORGANIC CONTENT IN SOILS						
	AASHTO T 288 SOIL RESISTIVITY						
	AASHTO T 289 pH OF SOIL						
	AASHTO T 290 SULFATE CONTENT IN SOIL						
	AASHTO T 291 CHLORIDE IN SOIL						
	MT 212 COMPACTION AND % MOISTURE (IN-PLACE DENSITY)	N/A	MINIMUM OF ONE TEST PER INSTALLATION AND PER LIFT	TEST			

MATERIAL/ MATERIAL CODE	TESTS	SAMPLE SIZE	SAMPLE/TEST FREQUENCY	FIELD	DISTRICT/ AREA LAB	MDT HQ LAB	NOTES
MSE WALL BACKFILL 701.09.00.02	MT 201 SAMPLING	77 LBS (35 KG)	ONE TEST PER SOURCE	SAMPLE			
	MT 202 SIEVE ANALYSIS				TEST		
	MT 208 LIQUID LIMIT						
	MT 208A PLASTIC LIMIT & PLASTICITY INDEX						
	MT 217 FRACTURE						
	MT 214 SOIL CLASS						
	MT 210 (5.5LB) PROCTOR						
	MT 230 (10LB) PROCTOR						
	MT 231 COARSE PARTICLE CORRECTION						PERFORMED WHEN REQUIRED PER MT 210 OR MT 230
	AASHTO T 104 SOUNDNESS SODIUM SULFATE	30 LBS (14 KG) SAMPLE MUST INCLUDE A MINIMUM OF 6 KG OF MINUS 10 MESH	ONE TEST PER SOURCE	SAMPLE		TEST	TEST MAY BE REQUIRED PER SPECIAL PROVISION
	AASHTO T 267 ORGANIC CONTENT IN SOILS						
	AASHTO T 288 SOIL RESISTIVITY						
	AASHTO T 289 pH OF SOIL						
	AASHTO T 290 SULFATE CONTENT IN SOIL						
	AASHTO T 291 CHLORIDE IN SOIL						
	MT 212 COMPACTION AND % MOISTURE (IN-PLACE DENSITY)	N/A	MINIMUM OF ONE TEST PER INSTALLATION AND PER LIFT	TEST			

MATERIAL/ MATERIAL CODE	TESTS	SAMPLE SIZE	SAMPLE/TEST FREQUENCY	FIELD	DISTRICT/ AREA LAB	MDT HQ LAB	NOTES
BRIDGE END BACKFILL TYPE 1 701.13.00.01	MT 201 SAMPLING	77 LBS (35 KG)	ONE TEST PER SOURCE	SAMPLE			
	MT 202 SIEVE ANALYSIS				TEST		
	MT 217 FRACTURE						
	MT 210 (5.5LB) PROCTOR						
	MT 230 (10LB) PROCTOR						
	MT 231 COARSE PARTICLE CORRECTION						PERFORMED WHEN REQUIRED PER MT 210 OR MT 230
	MT 212 COMPACTION AND % MOISTURE (IN-PLACE DENSITY)	N/A	MINIMUM OF ONE TEST PER INSTALLATION AND PER LIFT	TEST			

MATERIAL/ MATERIAL CODE	TESTS	SAMPLE SIZE	SAMPLE/TEST FREQUENCY	FIELD	DISTRICT/ AREA LAB	MDT HQ LAB	NOTES
BRIDGE END BACKFILL TYPE 2 701.13.00.02	MT 201 SAMPLING	77 LBS (35 KG)	ONE TEST PER SOURCE	SAMPLE			
	MT 202 SIEVE ANALYSIS				TEST		
	MT 210 (5.5LB) PROCTOR						
	MT 230 (10LB) PROCTOR						
	MT 231 COARSE PARTICLE CORRECTION						PERFORMED WHEN REQUIRED PER MT 210 OR MT 230
	MT 212 COMPACTION AND % MOISTURE (IN-PLACE DENSITY)	N/A	MINIMUM OF ONE TEST PER INSTALLATION AND PER LIFT	TEST			

MATERIAL/ MATERIAL CODE	TESTS	SAMPLE SIZE	SAMPLE/TEST FREQUENCY	FIELD	DISTRICT/ AREA LAB	MDT HQ LAB	NOTES
BRIDGE END BACKFILL TYPE 3 701.13.00.03	MT 201 SAMPLING	77 LBS (35 KG)	ONE TEST PER SOURCE	SAMPLE			
	MT 202 SIEVE ANALYSIS				TEST		
	MT 208 LIQUID LIMIT						
	MT 208A PLASTIC LIMIT & PLASTICITY INDEX						
	MT 214 SOIL CLASS						
	MT 210 (5.5LB) PROCTOR						
	MT 230 (10LB) PROCTOR						
	MT 231 COARSE PARTICLE CORRECTION						PERFORMED WHEN REQUIRED PER MT 210 OR MT 230
	MT 212 COMPACTION AND % MOISTURE (IN-PLACE DENSITY)	N/A	MINIMUM OF ONE TEST PER INSTALLATION AND PER LIFT	TEST			

	TESTS	SAMPLE SIZE	SAMPLE/TEST FREQUENCY	FIELD	DISTRICT/ AREA LAB	MDT HQ LAB	NOTES
PROPOSED SURFACING (GRAVEL PIT) PC 1	MT 200 PREPARATION	SAMPLE PER MT 201	ONE TEST PER SOURCE		VISUAL		
	MT 201 SAMPLING				SAMPLE		
	MT 202 SIEVE ANALYSIS				TEST		
	MT 208 LIQUID LIMIT						
	MT 208A PLASTIC LIMIT & PLASTICITY INDEX						
	MT 214 SOIL CLASS					TEST	
	MT 209 LOS ANGELES ABRASION						
	MT 223 CLAY LUMPS & FRIABLE PARTICLES						
	MT 233 MICRO-DEVAL						
	MT 305 VOLUME SWELL-CALIPER/MERCURY						
	MT 322 ADHESION						
	AASHTO T 104 SOUNDNESS SODIUM SULFATE						
	AASHTO T 190 R-VALUE						

MATERIAL/ MATERIAL CODE	TESTS	SAMPLE SIZE	SAMPLE/TEST FREQUENCY	FIELD	DISTRICT/ AREA LAB	MDT HQ LAB	NOTES
SOILS FOR SOIL SURVEY PC 2	MT 200 PREPARATION	SAMPLE PER MT 207	ONE TEST PER LOCATION		VISUAL		THIS INFORMATION IS FOR DESIGN
	MT 207 CENTERLINE SOIL SURVEY				SAMPLE		
	MT 201 SAMPLING						
	MT 202 SIEVE ANALYSIS				TEST		
	MT 208 LIQUID LIMIT						
	MT 208A PLASTIC LIMIT & PLASTICITY INDEX						
	MT 210 (5.5LB) PROCTOR						
	MT 230 (10LB) PROCTOR						
	MT 231 COARSE PARTICLE CORRECTION						PERFORMED WHEN REQUIRED PER MT 210 OR MT 230
	MT 214 SOIL CLASS						
	MT 220 SPECIFIC GRAVITY OF SOILS					TEST	
	MT 232 SOILS CORROSION						
	AASHTO T 190 R-VALUE						

MATERIAL/ MATERIAL CODE	TESTS	SAMPLE SIZE	SAMPLE/TEST FREQUENCY	FIELD	DISTRICT/ AREA LAB	MDT HQ LAB	NOTES
SHOULDER GRAVEL 301.03.06.01C 301.03.06.01T	MT 201 SAMPLING	30 LBS (14 KG)	ONE TEST PER PROJECT RESAMPLE IF MATERIAL CHANGES	SAMPLE			
	MT 202 SIEVE ANALYSIS				TEST		

MATERIAL/ MATERIAL CODE	TESTS	SAMPLE SIZE	SAMPLE/TEST FREQUENCY	FIELD	DISTRICT/ AREA LAB	MDT HQ LAB	NOTES
PULVERIZED/ MILLED BITUMINOUS PAVEMENT 302.03.01.01	CERT/ VISUAL INSPECTION	N/A	ONE PER PROJECT	VISUAL			VISUALLY INSPECT SO THAT 100% OF MATERIAL PASSES 2-INCH (50 MM) SIEVE
	MT 202 SIEVE ANALYSIS	77 LBS (35 KG)	VISUALLY INSPECT UNLESS QUESTIONABLE	TEST			
	MT 230 (10LB) PROCTOR		TWO TESTS PER MATERIAL TYPE RESAMPLE IF MATERIAL CHANGES	SAMPLE	TEST		
	MT 231 COARSE PARTICLE CORRECTION						PERFORMED WHEN REQUIRED PER MT 210 OR MT 230
	MT 219 CONTROL-STRIP TEST SECTION	N/A	WHEN RATIO OF BLENDED MATERIAL CHANGES BY MORE THAN 20% OR CHARACTERISTICS OR SITE CONDITIONS CHANGE	TEST			
	MT 212 COMPACTION AND % MOISTURE (IN-PLACE DENSITY)	N/A	10 TESTS PER 2000 FT (610 M)	TEST			

MATERIAL/ MATERIAL CODE	TESTS	SAMPLE SIZE	SAMPLE/TEST FREQUENCY	FIELD	DISTRICT/ AREA LAB	MDT HQ LAB	NOTES
TRAFFIC GRAVEL	MT 201 SAMPLING	77 LBS (35 KG)	ONE TEST PER PROJECT RESAMPLE IF MATERIAL CHANGES	SAMPLE			
	MT 202 SIEVE ANALYSIS			TEST			

MATERIAL/ MATERIAL CODE	TESTS	SAMPLE SIZE	SAMPLE/TEST FREQUENCY	FIELD	DISTRICT/ AREA LAB	MDT HQ LAB	NOTES
SAND SURFACING GRADE 4 701.02.03.01	MT 201 SAMPLING	30 LBS (14 KG)	1 SAMPLE FOR EACH 2,500 TONS (MT) (1,250 CU YDS (M^3)), 1 LOT = 5 SAMPLES OR APPROX. 12,500 TONS (MT) (6,250 CU YDS (M^3))	SAMPLE			
	MT 202 SIEVE ANALYSIS			TEST			
	MT 208 LIQUID LIMIT		ONE TEST PER PROJECT RESAMPLE IF MATERIAL CHANGES		TEST		
	MT 208A PLASTIC LIMIT & PLASTICITY INDEX						
	MT 210 (5.5LB) PROCTOR						
	MT 230 (10LB) PROCTOR						
	MT 231 COARSE PARTICLE CORRECTION						PERFORMED WHEN REQUIRED PER MT 210 OR MT 230
	MT 212 COMPACTION AND % MOISTURE (IN-PLACE DENSITY)	N/A	10 TESTS PER 2000 FT (610 M)	TEST			
	INDEPENDENT ASSURANCE (COMPARISON TESTING)			**FIELD**	**DISTRICT/ AREA LAB**	**MDT HQ LAB**	**NOTES**
	MT 202 SIEVE ANALYSIS	USE FIELD TESTED SAMPLE	1 SAMPLE FOR EACH 5 LOTS, MINIMUM OF 1 SAMPLE PER SOURCE		TEST	TEST	

MATERIAL/ MATERIAL CODE	TESTS	SAMPLE SIZE	SAMPLE/TEST FREQUENCY	FIELD	DISTRICT/ AREA LAB	MDT HQ LAB	NOTES
CRUSHED BASE COURSE GRADE 5A 701.02.04.01C 701.02.04.01T	MT 201 SAMPLING	77 LBS (35 KG)	1 SAMPLE FOR EACH 2,500 TONS (MT) (1,250 CU YDS (M^3)), 1 LOT = 5 SAMPLES OR APPROX. 12,500 TONS (MT) (6,250 CU YDS or (M^3))	SAMPLE			
	MT 202 SIEVE ANALYSIS			TEST			
	MT 217 FRACTURE						
	MT 208 LIQUID LIMIT	77 LBS (35 KG)	TWO TESTS PER MATERIAL TYPE RESAMPLE IF MATERIAL CHANGES	SAMPLE	TEST		
	MT 208A PLASTIC LIMIT & PLASTICITY INDEX						
	MT 230 (10LB) PROCTOR						
	MT 231 COARSE PARTICLE CORRECTION						PERFORMED WHEN REQUIRED PER MT 210 OR MT 230
	MT 212 COMPACTION AND % MOISTURE (IN-PLACE DENSITY)	N/A	10 TESTS PER 2000 FT (610 M)	TEST			
	INDEPENDENT ASSURANCE (COMPARISON TESTING)			**FIELD**	**DISTRICT/ AREA LAB**	**MDT HQ LAB**	**NOTES**
	MT 202 SIEVE ANALYSIS	USE FIELD TESTED SAMPLE	1 SAMPLE FOR EACH 5 LOTS, MINIMUM OF 1 SAMPLE PER SOURCE		TEST	TEST	
	MT 217 FRACTURE						
	MT 208 LIQUID LIMIT		1 SAMPLE PER PROJECT PER SOURCE				
	MT 208A PLASTIC LIMIT & PLASTICITY INDEX						

MATERIAL/ MATERIAL CODE	TESTS	SAMPLE SIZE	SAMPLE/TEST FREQUENCY	FIELD	DISTRICT/ AREA LAB	MDT HQ LAB	NOTES
CRUSHED BASE COURSE GRADE 6A 701.02.04.02C 701.02.04.02T	MT 201 SAMPLING	77 LBS (35 KG)	1 SAMPLE FOR EACH 2,500 TONS (MT) (1,250 CU YDS (M^3)), 1 LOT = 5 SAMPLES OR APPROX. 12,500 TONS (MT) (6,250 CU YDS or (M^3))	SAMPLE			
	MT 202 SIEVE ANALYSIS			TEST			
	MT 217 FRACTURE						
	MT 208 LIQUID LIMIT	77 LBS (35 KG)	TWO TESTS PER MATERIAL TYPE RESAMPLE IF MATERIAL CHANGES	SAMPLE	TEST		
	MT 208A PLASTIC LIMIT & PLASTICITY INDEX						
	MT 230 (10LB) PROCTOR						
	MT 231 COARSE PARTICLE CORRECTION						PERFORMED WHEN REQUIRED PER MT 210 OR MT 230
	MT 212 COMPACTION AND % MOISTURE (IN-PLACE DENSITY)	N/A	10 TESTS PER 2000 FT (610 M)	TEST			
	INDEPENDENT ASSURANCE (COMPARISON TESTING)			**FIELD**	**DISTRICT/ AREA LAB**	**MDT HQ LAB**	**NOTES**
	MT 202 SIEVE ANALYSIS	USE FIELD TESTED SAMPLE	1 SAMPLE FOR EACH 5 LOTS, MINIMUM OF 1 SAMPLE PER SOURCE		TEST	TEST	
	MT 217 FRACTURE						
	MT 208 LIQUID LIMIT		1 SAMPLE PER PROJECT PER SOURCE				
	MT 208A PLASTIC LIMIT & PLASTICITY INDEX						

MATERIAL/ MATERIAL CODE	TESTS	SAMPLE SIZE	SAMPLE/TEST FREQUENCY	FIELD	DISTRICT/ AREA LAB	MDT HQ LAB	NOTES
CRUSHED TOP SURFACING GRADE 2A 701.02.06.01C 701.02.06.01T	MT 201 SAMPLING	30 LBS (14 KG)	1 SAMPLE FOR EACH 2,500 TONS (MT) (1,250 CU YDS (M3)), 1 LOT = 5 SAMPLES OR APPROX. 12,500 TONS (MT) (6,250 CU YDS or (M3))	SAMPLE			
	MT 202 SIEVE ANALYSIS			TEST			
	MT 217 FRACTURE						
	SPEC 701.02.6 DUST RATIO						
	MT 208 LIQUID LIMIT	30 LBS (14 KG)	TWO TESTS PER MATERIAL TYPE RESAMPLE IF MATERIAL CHANGES	SAMPLE	TEST		
	MT 208A PLASTIC LIMIT & PLASTICITY INDEX						
	MT 210 (5.5LB) PROCTOR						
	MT 230 (10LB) PROCTOR						
	MT 231 COARSE PARTICLE CORRECTION						PERFORMED WHEN REQUIRED PER MT 210 OR MT 230
	MT 212 COMPACTION AND % MOISTURE (IN-PLACE DENSITY)	N/A	10 TESTS PER 2000 FT (610 M)	TEST			
	INDEPENDENT ASSURANCE (COMPARISON TESTING)			**FIELD**	**DISTRICT/ AREA LAB**	**MDT HQ LAB**	**NOTES**
	MT 202 SIEVE ANALYSIS	USE FIELD TESTED SAMPLE	1 SAMPLE FOR EACH 5 LOTS, MINIMUM OF 1 SAMPLE PER SOURCE		TEST	TEST	
	MT 217 FRACTURE						
	MT 208 LIQUID LIMIT		1 SAMPLE PER PROJECT PER SOURCE				
	MT 208A PLASTIC LIMIT & PLASTICITY INDEX						

MATERIAL/ MATERIAL CODE	TESTS	SAMPLE SIZE	SAMPLE/TEST FREQUENCY	FIELD	DISTRICT/ AREA LAB	MDT HQ LAB	NOTES
CRUSHED TOP SURFACING GRADE 3B 701.02.07.01C 701.02.07.01T	MT 201 SAMPLING	30 LBS (14 KG)	1 SAMPLE FOR EACH 2,500 TONS (MT) (1,250 CU YDS (M3)), 1 LOT = 5 SAMPLES OR APPROX. 12,500 TONS (MT) (6,250 CU YDS or (M3))	SAMPLE			
	MT 202 SIEVE ANALYSIS			TEST			
	MT 217 FRACTURE						
	SPEC 701.02.7 DUST RATIO						
	MT 208 LIQUID LIMIT	30 LBS (14 KG)	TWO TESTS PER MATERIAL TYPE RESAMPLE IF MATERIAL CHANGES	SAMPLE	TEST		
	MT 208A PLASTIC LIMIT & PLASTICITY INDEX						
	MT 210 (5.5LB) PROCTOR						
	MT 230 (10LB) PROCTOR						
	MT 231 COARSE PARTICLE CORRECTION						PERFORMED WHEN REQUIRED PER MT 210 OR MT 230
	MT 212 COMPACTION AND % MOISTURE (IN-PLACE DENSITY)	N/A	10 TESTS PER 2000 FT (610 M)	TEST			
	INDEPENDENT ASSURANCE (COMPARISON TESTING)			**FIELD**	**DISTRICT/ AREA LAB**	**MDT HQ LAB**	**NOTES**
	MT 202 SIEVE ANALYSIS	USE FIELD TESTED SAMPLE	1 SAMPLE FOR EACH 5 LOTS, MINIMUM OF 1 SAMPLE PER SOURCE		TEST	TEST	
	MT 217 FRACTURE						
	MT 208 LIQUID LIMIT		1 SAMPLE PER PROJECT PER SOURCE				
	MT 208A PLASTIC LIMIT & PLASTICITY INDEX						

MATERIAL/ MATERIAL CODE	TESTS	SAMPLE SIZE	SAMPLE/TEST FREQUENCY	FIELD	DISTRICT/ AREA LAB	MDT HQ LAB	NOTES
CRUSHED COVER AGGREGATE TYPE 2 (OLD GRADE 2A) 701.02.08.01	MT 201 SAMPLING	30 LBS (14 KG)	1 SAMPLE FOR EACH 38,500 SQ YDS (32,000 M^2), 5 SAMPLES = 1 LOT OR APPROX. 192,500 SQ YDS (160,000 M^2)	SAMPLE			
	MT 202 SIEVE ANALYSIS			TEST			
	MT 217 FRACTURE						
	INDEPENDENT ASSURANCE (COMPARISON TESTING)			**FIELD**	**DISTRICT/ AREA LAB**	**MDT HQ LAB**	**NOTES**
	MT 202 SIEVE ANALYSIS	USE FIELD TESTED SAMPLE	ONE TEST FOR EACH LOT		TEST	TEST	
	MT 217 FRACTURE						
	Mix Design			**FIELD**	**DISTRICT/ AREA LAB**	**MDT HQ LAB**	**NOTES**
	CERT/ VISUAL INSPECTION	1 EACH	ONE MIX DESIGN PER SOURCE	MIX DESIGN			CERTIFICATION IS THE CONTRACTOR'S MIX DESIGN. APPLICATION RATES AND COMPATIBILITY TEST RESULTS ARE SUBMITTED IN THE CONTRACTOR'S MIX DESIGN. ADHESION RESULTS (MT 322) ARE AN ACCEPTABLE METHOD FOR COMPATABILITY.

MATERIAL/ MATERIAL CODE	TESTS	SAMPLE SIZE	SAMPLE/TEST FREQUENCY	FIELD	DISTRICT/ AREA LAB	MDT HQ LAB	NOTES
CRUSHED COVER AGGREGATE TYPE 1 (OLD GRADE 4A) 701.02.08.02	MT 201 SAMPLING	30 LBS (14 KG)	1 SAMPLE FOR EACH 38,500 SQ YDS (32,000 M^2), 5 SAMPLES = 1 LOT OR APPROX. 192,500 SQ YDS (160,000 M^2)	SAMPLE			
	MT 202 SIEVE ANALYSIS			TEST			
	MT 217 FRACTURE						
	INDEPENDENT ASSURANCE (COMPARISON TESTING)			**FIELD**	**DISTRICT/ AREA LAB**	**MDT HQ LAB**	**NOTES**
	MT 202 SIEVE ANALYSIS	USE FIELD TESTED SAMPLE	ONE TEST FOR EACH LOT		TEST	TEST	
	MT 217 FRACTURE						
	Mix Design			**FIELD**	**DISTRICT/ AREA LAB**	**MDT HQ LAB**	**NOTES**
	CERT/ VISUAL INSPECTION	1 EACH	ONE MIX DESIGN PER SOURCE	MIX DESIGN			CERTIFICATION IS THE CONTRACTOR'S MIX DESIGN. APPLICATION RATES AND COMPATIBILITY TEST RESULTS ARE SUBMITTED IN THE CONTRACTOR'S MIX DESIGN. ADHESION RESULTS (MT 322) ARE AN ACCEPTABLE METHOD FOR COMPATABILITY.

MATERIAL/ MATERIAL CODE	TESTS	SAMPLE SIZE	SAMPLE/TEST FREQUENCY	FIELD	DISTRICT/ AREA LAB	MDT HQ LAB	NOTES
CRUSHED COVER AGGREGATE TYPE 3 701.02.08.05	MT 201 SAMPLING	30 LBS (14 KG)	1 SAMPLE FOR EACH 38,500 SQ YDS (32,000 M^2), 5 SAMPLES = 1 LOT OR APPROX. 192,500 SQ YDS (160,000 M^2)	SAMPLE			
	MT 202 SIEVE ANALYSIS			TEST			
	MT 217 FRACTURE						
	INDEPENDENT ASSURANCE (COMPARISON TESTING)			**FIELD**	**DISTRICT/ AREA LAB**	**MDT HQ LAB**	**NOTES**
	MT 202 SIEVE ANALYSIS	USE FIELD TESTED SAMPLE	ONE TEST FOR EACH LOT		TEST	TEST	
	MT 217 FRACTURE						
	Mix Design			**FIELD**	**DISTRICT/ AREA LAB**	**MDT HQ LAB**	**NOTES**
	CERT/ VISUAL INSPECTION	1 EACH	ONE MIX DESIGN PER SOURCE	MIX DESIGN			CERTIFICATION IS THE CONTRACTOR'S MIX DESIGN. APPLICATION RATES AND COMPATIBILITY TEST RESULTS ARE SUBMITTED IN THE CONTRACTOR'S MIX DESIGN. ADHESION RESULTS (MT 322) ARE AN ACCEPTABLE METHOD FOR COMPATABILITY.

MATERIAL/ MATERIAL CODE	TESTS	SAMPLE SIZE	SAMPLE/TEST FREQUENCY	FIELD	DISTRICT/ AREA LAB	MDT HQ LAB	NOTES
SLURRY SEAL AGGREGATE 701.02.08.03	MT 201 SAMPLING	30 LBS (14 KG)	1 SAMPLE FOR EACH 38,500 SQ YDS (32,000 M^2), 5 SAMPLES = 1 LOT OR APPROX. 192,500 SQ YDS (160,000 M^2)	SAMPLE			
	MT 202 SIEVE ANALYSIS			TEST			
	MT 217 FRACTURE						
	INDEPENDENT ASSURANCE (COMPARISON TESTING)			**FIELD**	**DISTRICT/ AREA LAB**	**MDT HQ LAB**	**NOTES**
	MT 202 SIEVE ANALYSIS	USE FIELD TESTED SAMPLE	ONE TEST FOR EACH LOT		TEST	TEST	
	MT 217 FRACTURE						
	Mix Design			**FIELD**	**DISTRICT/ AREA LAB**	**MDT HQ LAB**	**NOTES**
	CERT/ VISUAL INSPECTION	1 EACH	ONE MIX DESIGN PER SOURCE	MIX DESIGN			CERTIFICATION IS THE CONTRACTOR'S MIX DESIGN

MATERIAL/ MATERIAL CODE	TESTS	SAMPLE SIZE	SAMPLE/TEST FREQUENCY	FIELD	DISTRICT/ AREA LAB	MDT HQ LAB	NOTES
MICROSURFACING AGGREGATE 701.02.08.04	MT 201 SAMPLING	30 LBS (14 KG)	1 SAMPLE FOR EACH 500 TONS (MT), 5 SAMPLES = 1 LOT OR APPROX. 2,500 TONS (MT)	SAMPLE			
	MT 202 SIEVE ANALYSIS			TEST			
	MT 217 FRACTURE						
	INDEPENDENT ASSURANCE (COMPARISON TESTING)			**FIELD**	**DISTRICT/ AREA LAB**	**MDT HQ LAB**	**NOTES**
	MT 202 SIEVE ANALYSIS	USE FIELD TESTED SAMPLE	ONE TEST FOR EACH LOT		TEST	TEST	
	MT 217 FRACTURE						
	Mix Design			**FIELD**	**DISTRICT/ AREA LAB**	**MDT HQ LAB**	**NOTES**
	CERT/ VISUAL INSPECTION	1 EACH	ONE MIX DESIGN PER SOURCE	MIX DESIGN			CERTIFICATION IS THE CONTRACTOR'S MIX DESIGN

MATERIAL/ MATERIAL CODE	TESTS	SAMPLE SIZE	SAMPLE/TEST FREQUENCY	FIELD	DISTRICT/ AREA LAB	MDT HQ LAB	NOTES
CEMENT TREATED BASE 701.02.09.01	MT 201 SAMPLING	30 LBS (14 KG)	1 SAMPLE FOR EACH 1,500 TONS (MT) (750 CU YDS (575 M^3)), 5 SAMPLES = 1 LOT	SAMPLE			
	MT 202 SIEVE ANALYSIS			TEST			
	MT 208 LIQUID LIMIT		ONE TEST PER PROJECT RESAMPLE IF MATERIAL CHANGES	SAMPLE	TEST		
	MT 208A PLASTIC LIMIT & PLASTICITY INDEX						
	MT 211 MOISTURE - DENSITY RELATIONS OF SOIL-CEMENT						
	MT 216 SAMPLE CTB	30 LB (14 KG)	1 SET OF CYLINDERS PER 750 CU YDS (575 M^3) 5 SAMPLES = 1 LOT	SAMPLE			
	ASTM D1633 COMPRESSIVE STRENGTH OF MOLDED SOIL-CEMENT CYLINDERS					TEST	
	MT 212 COMPACTION AND % MOISTURE (IN-PLACE DENSITY)	N/A	1 TEST PER 750 CU YDS (575 M^3) 5 SAMPLES = 1 LOT	TEST			IF COMPACTION TEST FAILS, 2 ADDITIONAL TESTS ARE TO BE COMPLETED AND THE AVERAGE OF 3 TESTS IS THE RECORDED RESULTS
	INDEPENDENT ASSURANCE (COMPARISON TESTING)			**FIELD**	**DISTRICT/ AREA LAB**	**MDT HQ LAB**	**NOTES**
	MT 202 SIEVE ANALYSIS	USE FIELD TESTED SAMPLE	1 SAMPLE FOR EACH 5 LOTS, MINIMUM OF 1 SAMPLE PER SOURCE		TEST	TEST	
	MT 208 LIQUID LIMIT		1 SAMPLE PER PROJECT PER SOURCE				
	MT 208A PLASTIC LIMIT & PLASTICITY INDEX						
	Mix Design			**FIELD**	**DISTRICT/ AREA LAB**	**MDT HQ LAB**	**NOTES**
	CERT/ VISUAL INSPECTION	1 EACH	ONE MIX DESIGN PER SOURCE	MIX DESIGN			CERTIFICATION IS THE CONTRACTOR'S MIX DESIGN

BEARING DEVICES

SPECIALS, SUPPLEMENTAL AND STANDARD SPECS, DETAILED DWGS

MATERIAL/ MATERIAL CODE	TESTS	SAMPLE SIZE	SAMPLE/TEST FREQUENCY	FIELD	DISTRICT/ AREA LAB	MDT HQ LAB	NOTES
ELASTOMERIC BEARING DEVICES 565.02.00.01	CERT/ VISUAL INSPECTION	1 EACH	ONE PER LOT/ITEM	DATA SHEET			
	STEEL CERT CATEGORY 2	1 EACH	ONE PER FORM 406	FORM 406			MANDATORY SUBMITTAL OF DOCUMENTATION PER SPECIFICATION 106.09

MATERIAL/ MATERIAL CODE	TESTS	SAMPLE SIZE	SAMPLE/TEST FREQUENCY	FIELD	DISTRICT/ AREA LAB	MDT HQ LAB	NOTES
POLYTETRAFLUORO ETHYLENE (PTFE) 565.02.00.02	CERT/ VISUAL INSPECTION	1 EACH	ONE PER LOT/BATCH	DATA SHEET			VERIFY ITEM MEETS MDT REQUIREMENTS AND ATTACH APPLICABLE CERT

MATERIAL/ MATERIAL CODE	TESTS	SAMPLE SIZE	SAMPLE/TEST FREQUENCY	FIELD	DISTRICT/ AREA LAB	MDT HQ LAB	NOTES
FIBER REINFORCED PADS 565.02.00.03	CERT/ VISUAL INSPECTION	1 EACH	ONE PER LOT/BATCH	DATA SHEET			VERIFY ITEM MEETS MDT REQUIREMENTS AND ATTACH APPLICABLE CERT

MATERIAL/ MATERIAL CODE	TESTS	SAMPLE SIZE	SAMPLE/TEST FREQUENCY	FIELD	DISTRICT/ AREA LAB	MDT HQ LAB	NOTES
ANIONIC SLOW SET EMULSION SS-1 702.02.01.01	CERT/ VISUAL INSPECTION	1 EACH	ONE PER SHIPMENT	CERT OF COMP			QUALIFIED PRODUCTS LIST
	MT 302 SAMPLING	2 - 1 QT (2 - 1 L) SPECIMEN IN PLASTIC BOTTLES	ONE SAMPLE PER TANKER OR TRAILER	SAMPLE			SAMPLE REQUIRED ONLY IF NOT ON THE QUALIFIED PRODUCTS LIST
	AASHTO T 72 SAYBOLT VISCOSITY					TEST	MINIMUM OF ONE TEST PER PROJECT
	AASHTO T 49 PENETRATION OF BITUMINOUS MATERIALS						
	AASHTO T 59 EMULSIFIED ASPHALTS						**PRIMARY TEST METHOD** EVAPORATIVE DISTILLATION **SECONDARY TEST METHOD** HIGH TEMPERATURE DISTILLATION

MATERIAL/ MATERIAL CODE	TESTS	SAMPLE SIZE	SAMPLE/TEST FREQUENCY	FIELD	DISTRICT/ AREA LAB	MDT HQ LAB	NOTES
CATIONIC SLOW SET EMULSION CSS-1 702.02.01.02	CERT/ VISUAL INSPECTION	1 EACH	ONE PER SHIPMENT	CERT OF COMP			QUALIFIED PRODUCTS LIST
	MT 302 SAMPLING	2 - 1 QT (2 - 1 L) SPECIMEN IN PLASTIC BOTTLES	ONE SAMPLE PER TANKER OR TRAILER	SAMPLE			SAMPLE REQUIRED ONLY IF NOT ON THE QUALIFIED PRODUCTS LIST
	AASHTO T 72 SAYBOLT VISCOSITY					TEST	MINIMUM OF ONE TEST PER PROJECT
	AASHTO T 49 PENETRATION OF BITUMINOUS MATERIALS						
	AASHTO T 59 EMULSIFIED ASPHALTS						**PRIMARY TEST METHOD** EVAPORATIVE DISTILLATION **SECONDARY TEST METHOD** HIGH TEMPERATURE DISTILLATION

MATERIAL/ MATERIAL CODE	TESTS	SAMPLE SIZE	SAMPLE/TEST FREQUENCY	FIELD	DISTRICT/ AREA LAB	MDT HQ LAB	NOTES
CATIONIC SLOW SET EMULSION CSS-1H 702.02.01.03	CERT/ VISUAL INSPECTION	1 EACH	ONE PER SHIPMENT	CERT OF COMP			QUALIFIED PRODUCTS LIST
	MT 302 SAMPLING	2 - 1 QT (2 - 1 L) SPECIMEN IN PLASTIC BOTTLES	ONE SAMPLE PER TANKER OR TRAILER	SAMPLE			SAMPLE REQUIRED ONLY IF NOT ON THE QUALIFIED PRODUCTS LIST
	AASHTO T 72 SAYBOLT VISCOSITY					TEST	MINIMUM OF ONE TEST PER PROJECT
	AASHTO T 49 PENETRATION OF BITUMINOUS MATERIALS						
	AASHTO T 59 EMULSIFIED ASPHALTS						**PRIMARY TEST METHOD** EVAPORATIVE DISTILLATION **SECONDARY TEST METHOD** HIGH TEMPERATURE DISTILLATION

MATERIAL/ MATERIAL CODE	TESTS	SAMPLE SIZE	SAMPLE/TEST FREQUENCY	FIELD	DISTRICT/ AREA LAB	MDT HQ LAB	NOTES
MEDIUM CURING LIQUID ASPHALT MC-800 702.02.05.01	CERT/ VISUAL INSPECTION	1 EACH	ONE PER SHIPMENT	CERT OF COMP			
	MT 302 SAMPLING	2 - 1 QT (2 - 1 L) SPECIMEN IN METAL CANS	ONE SAMPLE PER TANKER OR TRAILER	SAMPLE			
	AASHTO T 201 KINEMATIC VISCOSITY					TEST	
	AASHTO T 78 DISTILLATION OF CUTBACK ASPHALT						
	AASHTO T 49 PENETRATION OF BITUMINOUS MATERIALS						

MATERIAL/ MATERIAL CODE	TESTS	SAMPLE SIZE	SAMPLE/TEST FREQUENCY	FIELD	DISTRICT/ AREA LAB	MDT HQ LAB	NOTES
MEDIUM CURING LIQUID ASPHALT MC-70 702.02.05.02	CERT/ VISUAL INSPECTION	1 EACH	ONE PER SHIPMENT	CERT OF COMP			ACCEPTANCE ONLY FROM THE QUALIFIED PRODUCTS LIST

MATERIAL/ MATERIAL CODE	TESTS	SAMPLE SIZE	SAMPLE/TEST FREQUENCY	FIELD	DISTRICT/ AREA LAB	MDT HQ LAB	NOTES
HIGH FLOAT EMULSION HF-100 702.02.07.01	CERT/ VISUAL INSPECTION	1 EACH	ONE PER SHIPMENT	CERT OF COMP			
	MT 302 SAMPLING	2 - 1 QT (2 - 1 L) SPECIMEN IN PLASTIC BOTTLES	ONE SAMPLE PER TANKER OR TRAILER	SAMPLE			
	AASHTO T 59 EMULSIFIED ASPHALTS					TEST	
	AASHTO T 72 SAYBOLT VISCOSITY						MINIMUM OF ONE TEST PER PROJECT

MATERIAL/ MATERIAL CODE	TESTS	SAMPLE SIZE	SAMPLE/TEST FREQUENCY	FIELD	DISTRICT/ AREA LAB	MDT HQ LAB	NOTES
POLYMER MODIFIED CATIONIC RAPID SET EMULSION CRS-2P 702.02.08.01	CERT/ VISUAL INSPECTION	1 EACH	ONE PER SHIPMENT	CERT OF COMP			
	MT 302 SAMPLING	2 - 1 QT (2 - 1 L) SPECIMEN IN PLASTIC BOTTLES	ONE SAMPLE PER TANKER OR TRAILER	SAMPLE			
	AASHTO T 72 SAYBOLT VISCOSITY					TEST	MINIMUM OF ONE TEST PER PROJECT
	AASHTO T 49 PENETRATION OF BITUMINOUS MATERIALS						
	AASHTO T 59 TESTING EMULSIFIED ASPHALTS						PARTICLE CHARGE TEST IS PERFORMED **PRIMARY TEST METHOD** EVAPORATIVE DISTILLATION **SECONDARY TEST METHOD** HIGH TEMPERATURE DISTILLATION

MATERIAL/ MATERIAL CODE	TESTS	SAMPLE SIZE	SAMPLE/TEST FREQUENCY	FIELD	DISTRICT/ AREA LAB	MDT HQ LAB	NOTES
CATIONIC RAPID SETTING EMULSION CRS-2 702.02.08.02	CERT/ VISUAL INSPECTION	1 EACH	ONE PER SHIPMENT	CERT OF COMP			
	MT 302 SAMPLING	2 - 1 QT (2 - 1 L) SPECIMEN IN PLASTIC BOTTLES	ONE SAMPLE PER TANKER OR TRAILER	SAMPLE			
	AASHTO T 72 SAYBOLT VISCOSITY					TEST	MINIMUM OF ONE TEST PER PROJECT
	AASHTO T 49 PENETRATION OF BITUMINOUS MATERIALS						
	AASHTO T 59 TESTING EMULSIFIED ASPHALTS						PARTICLE CHARGE TEST IS PERFORMED **PRIMARY TEST METHOD** EVAPORATIVE DISTILLATION **SECONDARY TEST METHOD** HIGH TEMPERATURE DISTILLATION

MATERIAL/ MATERIAL CODE	TESTS	SAMPLE SIZE	SAMPLE/TEST FREQUENCY	FIELD	DISTRICT/ AREA LAB	MDT HQ LAB	NOTES
CATIONIC QUICK SETTING EMULSION CQS-1h 702.02.08.03	CERT/ VISUAL INSPECTION	1 EACH	ONE PER SHIPMENT	CERT OF COMP			
	MT 302 SAMPLING	2 - 1 QT (2 - 1 L) SPECIMEN IN PLASTIC BOTTLES	ONE SAMPLE PER TANKER OR TRAILER	SAMPLE			
	AASHTO T 72 SAYBOLT VISCOSITY					TEST	MINIMUM OF ONE TEST PER PROJECT
	AASHTO T 49 PENETRATION OF BITUMINOUS MATERIALS						
	AASHTO T 59 TESTING EMULSIFIED ASPHALTS						PARTICLE CHARGE TEST IS PERFORMED **PRIMARY TEST METHOD** EVAPORATIVE DISTILLATION **SECONDARY TEST METHOD** HIGH TEMPERATURE DISTILLATION

MATERIAL/ MATERIAL CODE	TESTS	SAMPLE SIZE	SAMPLE/TEST FREQUENCY	FIELD	DISTRICT/ AREA LAB	MDT HQ LAB	NOTES
PERFORMANCE GRADED ASPHALT BINDER 58-28 702.02.09.06	CERT/ VISUAL INSPECTION	1 EACH	ONE PER SHIPMENT	CERT OF COMP			
	MT 302 SAMPLING	2 - 1 PINT (2-500 mL) SPECIMEN IN METAL CANS	1 SAMPLE PER 25 TONS (MT) OF ASPHALT BINDER (1 LOT = 150 TONS (MT) OF ASPHALT BINDER) **COMMERCIAL MIXES** 1 SAMPLE PER 450 TONS (MT) OF PLANT MIX SURFACING (1 LOT = 2700 TONS (MT) OF PLANT MIX SURFACING)	SAMPLE			
	AASHTO T 316 VISCOSITY BY ROTATIONAL VISCOMETER					TEST	
	AASHTO T 48 CLEVELAND OPEN CUP						
	AASHTO T 228 SPECIFIC GRAVITY OF ASPHALT MATERIALS						
	AASHTO T 315 DYNAMIC SHEAR RHEOMETER						
	AASHTO T 240 ROLLING THIN-FILM OVEN						
	AASHTO R 28 PRESSURIZED AGING VESSEL						
	AASHTO T 313 BENDING BEAM RHEOMETER						
	AASHTO T 51 DUCTILITY OF ASPHALT						
	INDEPENDENT ASSURANCE (PROCEDURAL CHECK)			**FIELD**	**DISTRICT/ AREA LAB**	**MDT HQ LAB**	
	MT 302 SAMPLING	N/A	1 PER 5 LOTS, MINIMUM OF 1 PER PROJECT (750 TONS OF ASPHALT BINDER)		CHECK		

MATERIAL/ MATERIAL CODE	TESTS	SAMPLE SIZE	SAMPLE/TEST FREQUENCY	FIELD	DISTRICT/ AREA LAB	MDT HQ LAB	NOTES
PERFORMANCE GRADED ASPHALT BINDER 64-22 702.02.09.09	CERT/ VISUAL INSPECTION	1 EACH	ONE PER SHIPMENT	CERT OF COMP			
	MT 302 SAMPLING	2 - 1 PINT (2-500 mL) SPECIMEN IN METAL CANS	1 SAMPLE PER 25 TONS (MT) OF ASPHALT BINDER (1 LOT = 150 TONS (MT) OF ASPHALT BINDER) **COMMERCIAL MIXES** 1 SAMPLE PER 450 TONS (MT) OF PLANT MIX SURFACING (1 LOT = 2700 TONS (MT) OF PLANT MIX SURFACING)	SAMPLE			
	AASHTO T 316 VISCOSITY BY ROTATIONAL VISCOMETER					TEST	
	AASHTO T 48 CLEVELAND OPEN CUP						
	AASHTO T 228 SPECIFIC GRAVITY OF ASPHALT MATERIALS						
	AASHTO T 315 DYNAMIC SHEAR RHEOMETER						
	AASHTO T 240 ROLLING THIN-FILM OVEN						
	AASHTO R 28 PRESSURIZED AGING VESSEL						
	AASHTO T 313 BENDING BEAM RHEOMETER						
	AASHTO T 51 DUCTILITY OF ASPHALT						
	INDEPENDENT ASSURANCE (PROCEDURAL CHECK)			**FIELD**	**DISTRICT/ AREA LAB**	**MDT HQ LAB**	
	MT 302 SAMPLING	N/A	1 PER 5 LOTS, MINIMUM OF 1 PER PROJECT (750 TONS OF ASPHALT BINDER)		CHECK		

MATERIAL/ MATERIAL CODE	TESTS	SAMPLE SIZE	SAMPLE/TEST FREQUENCY	FIELD	DISTRICT/ AREA LAB	MDT HQ LAB	NOTES
PERFORMANCE GRADED ASPHALT BINDER 64-28 702.02.09.10	CERT/ VISUAL INSPECTION	1 EACH	ONE PER SHIPMENT	CERT OF COMP			
	MT 302 SAMPLING	2 - 1 PINT (2-500 mL) SPECIMEN IN METAL CANS	1 SAMPLE PER 25 TONS (MT) OF ASPHALT BINDER (1 LOT = 150 TONS (MT) OF ASPHALT BINDER) **COMMERCIAL MIXES** 1 SAMPLE PER 450 TONS (MT) OF PLANT MIX SURFACING (1 LOT = 2700 TONS (MT) OF PLANT MIX SURFACING)	SAMPLE			
	AASHTO T 316 VISCOSITY BY ROTATIONAL VISCOMETER					TEST	
	AASHTO T 48 CLEVELAND OPEN CUP						
	AASHTO T 228 SPECIFIC GRAVITY OF ASPHALT MATERIALS						
	AASHTO T 315 DYNAMIC SHEAR RHEOMETER						
	AASHTO T 240 ROLLING THIN-FILM OVEN						
	AASHTO R 28 PRESSURIZED AGING VESSEL						
	AASHTO T 313 BENDING BEAM RHEOMETER						
	AASHTO T 51 DUCTILITY OF ASPHALT						
	INDEPENDENT ASSURANCE (PROCEDURAL CHECK)			**FIELD**	**DISTRICT/ AREA LAB**	**MDT HQ LAB**	
	MT 302 SAMPLING	N/A	1 PER 5 LOTS, MINIMUM OF 1 PER PROJECT (750 TONS OF ASPHALT BINDER)		CHECK		

MATERIAL/ MATERIAL CODE	TESTS	SAMPLE SIZE	SAMPLE/TEST FREQUENCY	FIELD	DISTRICT/ AREA LAB	MDT HQ LAB	NOTES
PERFORMANCE GRADED ASPHALT BINDER 70-28 702.02.09.12	CERT/ VISUAL INSPECTION	1 EACH	ONE PER SHIPMENT	CERT OF COMP			
	MT 302 SAMPLING	2 - 1 PINT (2-500 mL) SPECIMEN IN METAL CANS	1 SAMPLE PER 25 TONS (MT) OF ASPHALT BINDER (1 LOT = 150 TONS (MT) OF ASPHALT BINDER) **COMMERCIAL MIXES** 1 SAMPLE PER 450 TONS (MT) OF PLANT MIX SURFACING (1 LOT = 2700 TONS (MT) OF PLANT MIX SURFACING)	SAMPLE			
	AASHTO T 316 VISCOSITY BY ROTATIONAL VISCOMETER					TEST	
	AASHTO T 48 CLEVELAND OPEN CUP						
	AASHTO T 228 SPECIFIC GRAVITY OF ASPHALT MATERIALS						
	AASHTO T 315 DYNAMIC SHEAR RHEOMETER						
	AASHTO T 240 ROLLING THIN-FILM OVEN						
	AASHTO R 28 PRESSURIZED AGING VESSEL						
	AASHTO T 313 BENDING BEAM RHEOMETER						
	AASHTO T 51 DUCTILITY OF ASPHALT						
	INDEPENDENT ASSURANCE (PROCEDURAL CHECK)			**FIELD**	**DISTRICT/ AREA LAB**	**MDT HQ LAB**	
	MT 302 SAMPLING	N/A	1 PER 5 LOTS, MINIMUM OF 1 PER PROJECT (750 TONS OF ASPHALT BINDER)		CHECK		

BITUMINOUS PRIME & TACK COAT

SPECIALS, SUPPLEMENTAL AND STANDARD SPECS, DETAILED DWGS

MATERIAL/ MATERIAL CODE	TESTS	SAMPLE SIZE	SAMPLE/TEST FREQUENCY	FIELD	DISTRICT/ AREA LAB	MDT HQ LAB	NOTES
BLOTTER MATERIAL 407.02.02.01C 407.02.02.01T	MT 201 SAMPLING	30 LBS (14 KG)	ONE TEST PER PROJECT	SAMPLE			
	MT 202 SIEVE ANALYSIS				TEST		
	MT 208 LIQUID LIMIT						
	MT 208A PLASTIC LIMIT & PLASTICITY INDEX						

MATERIAL/ MATERIAL CODE	TESTS	SAMPLE SIZE	SAMPLE/TEST FREQUENCY	FIELD	DISTRICT/ AREA LAB	MDT HQ LAB	NOTES
PORTLAND CEMENT 551.02.01.01	CERT/ VISUAL INSPECTION	1 EACH	ONE PER GRIND/BIN/SHIPMENT	DATA SHEET			ACCEPTANCE ONLY FROM THE QUALIFIED PRODUCTS LIST

MATERIAL/ MATERIAL CODE	TESTS	SAMPLE SIZE	SAMPLE/TEST FREQUENCY	FIELD	DISTRICT/ AREA LAB	MDT HQ LAB	NOTES
BLENDED CEMENT 551.02.01.02	CERT/ VISUAL INSPECTION	1 EACH	ONE PER GRIND/BIN/SHIPMENT	DATA SHEET			ACCEPTANCE ONLY FROM THE QUALIFIED PRODUCTS LIST VERIFY MATERIAL USED IS INCLUDED IN THE CONCRETE MIX DESIGN

MATERIAL/ MATERIAL CODE	TESTS	SAMPLE SIZE	SAMPLE/TEST FREQUENCY	FIELD	DISTRICT/ AREA LAB	MDT HQ LAB	NOTES
CONCRETE ADMIXTURE 551.02.03.01	CERT/ VISUAL INSPECTION	1 EACH	ONE PER TYPE OF ADMIXTURE	DATA SHEET			ACCEPTANCE ONLY FROM THE QUALIFIED PRODUCTS LIST VERIFY MATERIAL USED IS INCLUDED IN THE CONCRETE MIX DESIGN

MATERIAL/ MATERIAL CODE	TESTS	SAMPLE SIZE	SAMPLE/TEST FREQUENCY	FIELD	DISTRICT/ AREA LAB	MDT HQ LAB	NOTES
EPOXY ADHESIVES 551.02.04.01	CERT/ VISUAL INSPECTION	1 EACH	ONE PER EPOXY TYPE	DATA SHEET			

MATERIAL/ MATERIAL CODE	TESTS	SAMPLE SIZE	SAMPLE/TEST FREQUENCY	FIELD	DISTRICT/ AREA LAB	MDT HQ LAB	NOTES
FLY ASH 551.02.10.01	CERT/ VISUAL INSPECTION	1 EACH	ONE PER GRIND/BIN/SHIPMENT	DATA SHEET			ACCEPTANCE ONLY FROM THE QUALIFIED PRODUCTS LIST VERIFY MATERIAL USED IS INCLUDED IN THE CONCRETE MIX DESIGN

MATERIAL/ MATERIAL CODE	TESTS	SAMPLE SIZE	SAMPLE/TEST FREQUENCY	FIELD	DISTRICT/ AREA LAB	MDT HQ LAB	NOTES
MICROSILICA /SILICA FUME 551.02.11.01	CERT/ VISUAL INSPECTION	1 EACH	ONE PER GRIND/BIN/SHIPMENT	DATA SHEET			ACCEPTANCE ONLY FROM THE QUALIFIED PRODUCTS LIST VERIFY MATERIAL USED IS INCLUDED IN THE CONCRETE MIX DESIGN

MATERIAL/ MATERIAL CODE	TESTS	SAMPLE SIZE	SAMPLE/TEST FREQUENCY	FIELD	DISTRICT/ AREA LAB	MDT HQ LAB	NOTES
METAKAOLIN 551.02.12.01	CERT/ VISUAL INSPECTION	1 EACH	ONE PER GRIND/BIN/SHIPMENT	DATA SHEET			ACCEPTANCE ONLY FROM THE QUALIFIED PRODUCTS LIST VERIFY MATERIAL USED IS INCLUDED IN THE CONCRETE MIX DESIGN

MATERIAL/ MATERIAL CODE	TESTS	SAMPLE SIZE	SAMPLE/TEST FREQUENCY	FIELD	DISTRICT/ AREA LAB	MDT HQ LAB	NOTES
GROUND GRANULATED BLAST FURNACE SLAG (GGBFS) 551.02.13.01	CERT/ VISUAL INSPECTION	1 EACH	ONE PER GRIND/BIN/SHIPMENT	DATA SHEET			ACCEPTANCE ONLY FROM THE QUALIFIED PRODUCTS LIST VERIFY MATERIAL USED IS INCLUDED IN THE CONCRETE MIX DESIGN

MATERIAL/ MATERIAL CODE	TESTS	SAMPLE SIZE	SAMPLE/TEST FREQUENCY	FIELD	DISTRICT/ AREA LAB	MDT HQ LAB	NOTES
SHOTCRETE 551.03.02.01	AASHTO R 60 SAMPLING FRESH CONCRETE	REFER TO TEST FOR SIZE		SAMPLE			
	ASTM C1140 SHOTCRETE PANELS	24"X24"X4" (600 MM X 600 MM X 100 MM) PANEL	TWO SETS OF THREE CORES PER LOT (1 LOT = 100 CU YDS (75 M^3)) (SMALL QUANTITES TESTED EVERY 25 CY (M^3)) MINIMUM OF ONE TEST/PANEL PER INSTALLATION	SAMPLE		TEST	
	AASHTO T 24 OBTAIN & TEST CONCRETE CORES						
	AASHTO T 152 AIR CONTENT	1 CU FT (0.03 M^3)	ONE TEST FOR THE FIRST LOAD AND ONE TEST EVERY 16 CU YDS (12 M^3)	TEST			
	Mix Design			**FIELD**	**DISTRICT/ AREA LAB**	**MDT HQ LAB**	**NOTES**
	CERT/ VISUAL INSPECTION	1 EACH	ONE MIX DESIGN PER BID ITEM	MIX DESIGN		APPROVAL	CERTIFICATION IS THE CONTRACTOR'S MIX DESIGN. SEPARATE MIX DESIGNS NEEDED ONLY WHEN CONCRETE REQUIREMENTS VARY.

MATERIAL/ MATERIAL CODE	TESTS	SAMPLE SIZE	SAMPLE/TEST FREQUENCY	FIELD	DISTRICT/ AREA LAB	MDT HQ LAB	NOTES
CLASS GENERAL CONCRETE 551.03.02.02	AASHTO R 60 SAMPLING FRESH CONCRETE	REFER TO TEST FOR SIZE		SAMPLE			
	MT 101 COMPRESSIVE STRENGTH CYLINDERS	1 CU FT (0.03 M^3)	MINIMUM OF 2 SETS PER LOT (200 YD^3 (150 M^3) OR EACH DAY'S POUR WHICHEVER IS LESS)	SAMPLE		TEST	1 SET MAY REPRESENT POURS OF 30 YD^3 (23 M^3) OR LESS [551.03.8(B)(1)(a)]
	AASHTO T 152 AIR CONTENT	1 CU FT (0.03 M^3)	ONE TEST EVERY 24 YD^3 (18 M^3) AND WHEN COMPRESSIVE STRENGTH CYLINDERS ARE MADE	SAMPLE TEST			INCLUDE IN QA
	AASHTO T 119 SLUMP						TEST EACH LOAD WHEN INCONSISTENT OR FAILING TEST RESULTS ARE ENCOUNTERED
	AASHTO T 309 TEMPERATURE OF FRESHLY MIXED CONCRETE						
	AASHTO T 121 UNIT WEIGHT						FOR INFORMATION ONLY
	INDEPENDENT ASSURANCE (PROCEDURAL CHECK)			**FIELD**	**DISTRICT/ AREA LAB**	**MDT HQ LAB**	**NOTES**
	AASHTO R 60 SAMPLING FRESH CONCRETE	USE FIELD TESTED SAMPLE	ONE PER 400 CU YDS (300 M^3) OR A MINIMUM OF ONE PER PROJECT		CHECK	CHECK	PROCEDURAL CHECK MAY BE PERFORMED BY THE DISTRICT/AREA LAB
	AASHTO T 152 AIR CONTENT						
	AASHTO T 119 SLUMP						
	MT 101 COMPRESSIVE STRENGTH CYLINDERS		ONE SET OF FOUR CYLINDERS PER 400 CU YDS (300 M^3) OR A MINIMUM OF ONE SET PER PROJECT				
	Mix Design			**FIELD**	**DISTRICT/ AREA LAB**	**MDT HQ LAB**	**NOTES**
	CERT/ VISUAL INSPECTION	1 EACH	ONE MIX DESIGN PER BID ITEM	MIX DESIGN		APPROVAL	CERTIFICATION IS THE CONTRACTOR'S MIX DESIGN. SEPARATE MIX DESIGNS NEEDED ONLY WHEN CONCRETE REQUIREMENTS VARY.

MATERIAL/ MATERIAL CODE	TESTS	SAMPLE SIZE	SAMPLE/TEST FREQUENCY	FIELD	DISTRICT/ AREA LAB	MDT HQ LAB	NOTES
CLASS PAVE CONCRETE 551.03.02.03	AASHTO R 60 SAMPLING FRESH CONCRETE	REFER TO TEST FOR SIZE		SAMPLE			
	MT 101 COMPRESSIVE STRENGTH CYLINDERS	1 CU FT (0.03 M^3)	MINIMUM OF 2 SETS PER LOT (1000 YD^3 (750 M^3) OR EACH DAY'S POUR WHICHEVER IS LESS)	SAMPLE		TEST	1 SET MAY REPRESENT POURS OF 30 YD^3 (23 M^3) OR LESS [551.03.8(B)(1)(a)]
	AASHTO T 152 AIR CONTENT	1 CU FT (0.03 M^3)	ONE TEST EVERY 24 YD^3 (18 M^3) AND WHEN COMPRESSIVE STRENGTH CYLINDERS ARE MADE	SAMPLE TEST			INCLUDE IN QA
	AASHTO T 119 SLUMP						TEST EACH LOAD WHEN INCONSISTENT OR FAILING TEST RESULTS ARE ENCOUNTERED
	AASHTO T 309 TEMPERATURE OF FRESHLY MIXED CONCRETE						
	MT 103 THICKNESS OF CONCRETE USING A THICKNESS GAUGE	N/A	MIN OF ONE TEST PER 1000 FEET (300 M) OF TRAFFIC LANE OF PAVEMENT PLACED	SAMPLE TEST			PRIMARY TEST
	AASHTO T 148 MEASURING LENGTH OF CORES						SECONDARY TEST NOTE: USE ONLY IF THIN SECTIONS ARE IDENTIFIED PER MT 103 DEFICIENCIES ARE IDENTIFIED IN MDT STANDARD SPECS SECTION 501.03.20
	AASHTO T 24 OBTAIN AND TEST CONCRETE CORES						
	AASHTO T 121 UNIT WEIGHT						FOR INFORMATION ONLY

	INDEPENDENT ASSURANCE (PROCEDURAL CHECK)			FIELD	DISTRICT/ AREA LAB	MDT HQ LAB	NOTES
CLASS PAVE CONCRETE 551.03.02.03	AASHTO R 60 SAMPLING FRESH CONCRETE	USE FIELD TESTED SAMPLE	ONE PER 5000 CU YDS (3800 M^3) OR A MINIMUM OF ONE PER PROJECT		CHECK	CHECK	PROCEDURAL CHECK MAY BE PERFORMED BY THE DISTRICT/AREA LAB
	AASHTO T 152 AIR CONTENT						
	AASHTO T 119 SLUMP						
	MT 101 COMPRESSIVE STRENGTH CYLINDERS		ONE SET OF FOUR CYLINDERS PER 5000 CU YDS (M^3) OR A MINIMUM OF ONE SET PER PROJECT				
	Mix Design			**FIELD**	**DISTRICT/ AREA LAB**	**MDT HQ LAB**	**NOTES**
	CERT/ VISUAL INSPECTION	1 EACH	ONE MIX DESIGN PER BID ITEM	MIX DESIGN		APPROVAL	CERTIFICATION IS THE CONTRACTOR'S MIX DESIGN. SEPARATE MIX DESIGNS NEEDED ONLY WHEN CONCRETE REQUIREMENTS VARY.

MATERIAL/ MATERIAL CODE	TESTS	SAMPLE SIZE	SAMPLE/TEST FREQUENCY	FIELD	DISTRICT/ AREA LAB	MDT HQ LAB	NOTES
CLASS PRE CONCRETE 551.03.02.04	AASHTO R 60 SAMPLING FRESH CONCRETE	REFER TO TEST FOR SIZE			PRE-INSPECTION		
	MT 101 COMPRESSIVE STRENGTH CYLINDERS	1 CU FT (0.03 M^3)	MINIMUM OF ONE SET OF THREE CYLINDERS PER ITEM				
	AASHTO T 152 AIR CONTENT	1 CU FT (0.03 M^3)	ONE TEST FOR THE FIRST LOAD AND ONE TEST EVERY 16 CU YDS (12 M^3)				TEST EACH LOAD WHEN INCONSISTENT OR FAILING TEST RESULTS ARE ENCOUNTERED
	AASHTO T 119 SLUMP						
	AASHTO T 309 TEMPERATURE OF FRESHLY MIXED CONCRETE						
	AASHTO T 121 UNIT WEIGHT						FOR INFORMATION ONLY
	Mix Design			**FIELD**	**DISTRICT/ AREA LAB**	**MDT HQ LAB**	**NOTES**
	CERT/ VISUAL INSPECTION	1 EACH	ONE MIX DESIGN PER BID ITEM	MIX DESIGN		APPROVAL	CERTIFICATION IS THE CONTRACTOR'S MIX DESIGN. SEPARATE MIX DESIGNS NEEDED ONLY WHEN CONCRETE REQUIREMENTS VARY.

MATERIAL/ MATERIAL CODE	TESTS	SAMPLE SIZE	SAMPLE/TEST FREQUENCY	FIELD	DISTRICT/ AREA LAB	MDT HQ LAB	NOTES
CLASS SCC CONCRETE 551.03.02.05	AASHTO R 60 SAMPLING FRESH CONCRETE	REFER TO TEST FOR SIZE		SAMPLE			
	MT 117 COMPRESSIVE STRENGTH CYLINDERS OF SCC	1 CU FT (0.03 M^3)	MINIMUM OF 2 SETS PER LOT (200 YD^3 (150 M^3) OR EACH DAY'S POUR WHICHEVER IS LESS)	SAMPLE		TEST	1 SET MAY REPRESENT POURS OF 30 YD^3 (23 M^3) OR LESS [551.03.8(B)(1)(a)]
	MT 118 AIR CONTENT SCC	1 CU FT (0.03 M^3)	ONE TEST EVERY 24 YD^3 (18 M^3) AND WHEN COMPRESSIVE STRENGTH CYLINDERS ARE MADE	SAMPLE TEST			INCLUDE IN QA
	AASHTO T 347 SLUMP FLOW SCC						TEST EACH LOAD WHEN INCONSISTENT OR FAILING TEST RESULTS ARE ENCOUNTERED
	AASHTO T 345 PASSING ABILITY OF SCC BY J-RING						
	AASHTO T 309 TEMPERATURE OF FRESHLY MIXED CONCRETE						
	AASHTO T 351 VISUAL STABILITY INDEX (VSI)		DETERMINE VSI EVERY TIME A SLUMP FLOW TEST IS CONDUCTED	VISUAL			
	AASHTO T 121 UNIT WEIGHT			SAMPLE TEST			FOR INFORMATION ONLY

	INDEPENDENT ASSURANCE (PROCEDURAL CHECK)			FIELD	DISTRICT/ AREA LAB	MDT HQ LAB	NOTES
CLASS SCC CONCRETE 551.03.02.05	AASHTO R 60 SAMPLING FRESH CONCRETE	USE FIELD TESTED SAMPLE	ONE PER 400 CU YDS (300 M^3) OR A MINIMUM OF ONE PER PROJECT		CHECK	CHECK	PROCEDURAL CHECK MAY BE PERFORMED BY THE DISTRICT/AREA LAB
	MT 118 AIR CONTENT SCC						
	AASHTO T 347 SLUMP FLOW SCC						
	AASHTO T 345 PASSING ABILITY OF SCC BY J-RING						
	AASHTO T 351 VISUAL STABILITY INDEX						
	MT 117 COMPRESSIVE STRENGTH CYLINDERS OF SCC		ONE SET OF FOUR CYLINDERS PER 400 CU YDS (300 M^3) OR A MINIMUM OF ONE SET PER PROJECT				
	Mix Design			**FIELD**	**DISTRICT/ AREA LAB**	**MDT HQ LAB**	**NOTES**
	CERT/ VISUAL INSPECTION	1 EACH	ONE MIX DESIGN PER BID ITEM	MIX DESIGN		APPROVAL	CERTIFICATION IS THE CONTRACTOR'S MIX DESIGN. SEPARATE MIX DESIGNS NEEDED ONLY WHEN CONCRETE REQUIREMENTS VARY.

MATERIAL/ MATERIAL CODE	TESTS	SAMPLE SIZE	SAMPLE/TEST FREQUENCY	FIELD	DISTRICT/ AREA LAB	MDT HQ LAB	NOTES
CLASS DECK CONCRETE 551.03.02.06	AASHTO R 60 SAMPLING FRESH CONCRETE	REFER TO TEST FOR SIZE		SAMPLE			
	MT 101 COMPRESSIVE STRENGTH CYLINDERS	1 CU FT (0.03 M^3)	MINIMUM OF 2 SETS PER LOT (200 YD^3 (150 M^3) OR EACH DAY'S POUR WHICHEVER IS LESS)	SAMPLE		TEST	1 SET MAY REPRESENT POURS OF 30 YD^3 (23 M^3) OR LESS [551.03.8(B)(1)(a)]
	AASHTO T 358 RESISTIVITY		TEST 3 - 28 DAY COMPRESSIVE STRENGTH CYLINDERS				
	AASHTO T 152 AIR CONTENT	1 CU FT (0.03 M^3)	ONE TEST EVERY 24 YD^3 (18 M^3) AND WHEN COMPRESSIVE STRENGTH CYLINDERS ARE MADE	SAMPLE TEST			INCLUDE IN QA
	AASHTO T 119 SLUMP						TEST EACH LOAD WHEN INCONSISTENT OR FAILING TEST RESULTS ARE ENCOUNTERED
	AASHTO T 309 TEMPERATURE OF FRESHLY MIXED CONCRETE						
	AASHTO T 121 UNIT WEIGHT						FOR INFORMATION ONLY
	INDEPENDENT ASSURANCE (PROCEDURAL CHECK)			**FIELD**	**DISTRICT/ AREA LAB**	**MDT HQ LAB**	**NOTES**
	AASHTO R 60 SAMPLING FRESH CONCRETE	USE FIELD TESTED SAMPLE	ONE PER 400 CU YDS (300 M^3) OR A MINIMUM OF ONE PER PROJECT		CHECK	CHECK	PROCEDURAL CHECK MAY BE PERFORMED BY THE DISTRICT/AREA LAB
	AASHTO T 152 AIR CONTENT						
	AASHTO T 119 SLUMP						
	MT 101 COMPRESSIVE STRENGTH CYLINDERS		ONE SET OF FOUR CYLINDERS PER 400 CU YDS (300 M^3) OR A MINIMUM OF ONE SET PER PROJECT				
	Mix Design			**FIELD**	**DISTRICT/ AREA LAB**	**MDT HQ LAB**	**NOTES**
	CERT/ VISUAL INSPECTION	1 EACH	ONE MIX DESIGN PER BID ITEM	MIX DESIGN		APPROVAL	CERTIFICATION IS THE CONTRACTOR'S MIX DESIGN. SEPARATE MIX DESIGNS NEEDED ONLY WHEN CONCRETE REQUIREMENTS VARY.

MATERIAL/ MATERIAL CODE	TESTS	SAMPLE SIZE	SAMPLE/TEST FREQUENCY	FIELD	DISTRICT/ AREA LAB	MDT HQ LAB	NOTES
CLASS OVERLAY-SF CONCRETE 551.03.02.07	AASHTO R 60 SAMPLING FRESH CONCRETE	REFER TO TEST FOR SIZE		SAMPLE			
	MT 101 COMPRESSIVE STRENGTH CYLINDERS	1 CU FT (0.03 M^3)	MINIMUM OF 2 SETS PER LOT (200 YD^3 (150 M^3) OR EACH DAY'S POUR WHICHEVER IS LESS)	SAMPLE		TEST	1 SET MAY REPRESENT POURS OF 30 YD^3 (23 M^3) OR LESS [551.03.8(B)(1)(a)]
	AASHTO T 358 RESISTIVITY		TEST 3 - 28 DAY COMPRESSIVE STRENGTH CYLINDERS				
	AASHTO T 152 AIR CONTENT	1 CU FT (0.03 M^3)	ONE TEST FOR THE FIRST LOAD AND THEN ONE TEST EVERY 16 CU YDS (12 M^3) THEREAFTER	SAMPLE TEST			INCLUDE IN QA
	AASHTO T 119 SLUMP						TEST EACH LOAD WHEN INCONSISTENT OR FAILING TEST RESULTS ARE ENCOUNTERED
	AASHTO T 309 TEMPERATURE OF FRESHLY MIXED CONCRETE						
	AASHTO T 121 UNIT WEIGHT						FOR INFORMATION ONLY
	Mix Design			**FIELD**	**DISTRICT/ AREA LAB**	**MDT HQ LAB**	**NOTES**
	CERT/ VISUAL INSPECTION	1 EACH	ONE MIX DESIGN PER BID ITEM	MIX DESIGN		APPROVAL	CERTIFICATION IS THE CONTRACTOR'S MIX DESIGN. SEPARATE MIX DESIGNS NEEDED ONLY WHEN CONCRETE REQUIREMENTS VARY.

MATERIAL/ MATERIAL CODE	TESTS	SAMPLE SIZE	SAMPLE/TEST FREQUENCY	FIELD	DISTRICT/ AREA LAB	MDT HQ LAB	NOTES
CLASS OVERLAY-LM CONCRETE 551.03.02.08	CERT/ VISUAL INSPECTION	1 EACH	ONE PER LOT/BATCH	DATA SHEET			VERIFY LATEX MEETS MDT REQUIREMENTS AND ATTACH APPLICABLE CERT
	AASHTO R 60 SAMPLING FRESH CONCRETE	REFER TO TEST FOR SIZE		SAMPLE			
	MT 101 COMPRESSIVE STRENGTH CYLINDERS	1 CU FT (0.03 M^3)	MINIMUM OF 2 SETS PER LOT (200 YD^3 (150 M^3) OR EACH DAY'S POUR WHICHEVER IS LESS)	SAMPLE		TEST	1 SET MAY REPRESENT POURS OF 30 YD^3 (23 M^3) OR LESS [551.03.8(B)(1)(a)]
	AASHTO T 358 RESISTIVITY		TEST 3 - 28 DAY COMPRESSIVE STRENGTH CYLINDERS				
	AASHTO T 152 AIR CONTENT	1 CU FT (0.03 M^3)	ONE TEST PER EACH MOBILE MIXER	SAMPLE TEST			
	AASHTO T 121 UNIT WEIGHT						FOR INFORMATION ONLY

MATERIAL/ MATERIAL CODE	TESTS	SAMPLE SIZE	SAMPLE/TEST FREQUENCY	FIELD	DISTRICT/ AREA LAB	MDT HQ LAB	NOTES
CLASS STRUCTURE CONCRETE 551.03.02.09	AASHTO R 60 SAMPLING FRESH CONCRETE	REFER TO TEST FOR SIZE		SAMPLE			
	MT 101 COMPRESSIVE STRENGTH CYLINDERS	1 CU FT (0.03 M^3)	MINIMUM OF 2 SETS PER LOT (200 YD^3 (150 M^3) OR EACH DAY'S POUR WHICHEVER IS LESS)	SAMPLE		TEST	1 SET MAY REPRESENT POURS OF 30 YD^3 (23 M^3) OR LESS [551.03.8(B)(1)(a)]
	AASHTO T 358 RESISTIVITY		TEST 3 - 28 DAY COMPRESSIVE STRENGTH CYLINDERS				ONLY REQUIRED WHEN CLASS STRUCTURE IS SPECIFIED BY CONTRACT IN LIEU OF CLASS DECK
	AASHTO T 152 AIR CONTENT	1 CU FT (0.03 M^3)	ONE TEST EVERY 24 YD^3 (18 M^3) AND WHEN COMPRESSIVE STRENGTH CYLINDERS ARE MADE	SAMPLE TEST			INCLUDE IN QA
	AASHTO T 119 SLUMP						TEST EACH LOAD WHEN INCONSISTENT OR FAILING TEST RESULTS ARE ENCOUNTERED
	AASHTO T 309 TEMPERATURE OF FRESHLY MIXED CONCRETE						
	AASHTO T 121 UNIT WEIGHT						FOR INFORMATION ONLY
	INDEPENDENT ASSURANCE (PROCEDURAL CHECK)			**FIELD**	**DISTRICT/ AREA LAB**	**MDT HQ LAB**	**NOTES**
	AASHTO R 60 SAMPLING FRESH CONCRETE	USE FIELD TESTED SAMPLE	ONE PER 400 CU YDS (300 M^3) OR A MINIMUM OF ONE PER PROJECT		CHECK	CHECK	PROCEDURAL CHECK MAY BE PERFORMED BY THE DISTRICT/AREA LAB
	AASHTO T 152 AIR CONTENT						
	AASHTO T 119 SLUMP						
	MT 101 COMPRESSIVE STRENGTH CYLINDERS		ONE SET OF FOUR CYLINDERS PER 400 CU YDS (300 M^3) OR A MINIMUM OF ONE SET PER PROJECT				
	Mix Design			**FIELD**	**DISTRICT/ AREA LAB**	**MDT HQ LAB**	**NOTES**
	CERT/ VISUAL INSPECTION	1 EACH	ONE MIX DESIGN PER BID ITEM	MIX DESIGN		APPROVAL	CERTIFICATION IS THE CONTRACTOR'S MIX DESIGN. SEPARATE MIX DESIGNS NEEDED ONLY WHEN CONCRETE REQUIREMENTS VARY.

MATERIAL/ MATERIAL CODE	TESTS	SAMPLE SIZE	SAMPLE/TEST FREQUENCY	FIELD	DISTRICT/ AREA LAB	MDT HQ LAB	NOTES
CLASS DRILLED SHAFT CONCRETE 551.03.02.10	AASHTO R 60 SAMPLING FRESH CONCRETE	REFER TO TEST FOR SIZE		SAMPLE			
	MT 101 COMPRESSIVE STRENGTH CYLINDERS	1 CU FT (0.03 M^3)	MINIMUM OF 2 SETS PER LOT (200 YD^3 (150 M^3) OR EACH DAY'S POUR WHICHEVER IS LESS)	SAMPLE		TEST	1 SET MAY REPRESENT POURS OF 30 YD^3 (23 M^3) OR LESS [551.03.8(B)(1)(a)]
	AASHTO T 152 AIR CONTENT	1 CU FT (0.03 M^3)	ONE TEST EVERY 24 YD^3 (18 M^3) AND WHEN COMPRESSIVE STRENGTH CYLINDERS ARE MADE	SAMPLE TEST			INCLUDE IN QA
	AASHTO T 119 SLUMP						TEST EACH LOAD WHEN INCONSISTENT OR FAILING TEST RESULTS ARE ENCOUNTERED
	AASHTO T 309 TEMPERATURE OF FRESHLY MIXED CONCRETE						
	AASHTO T 121 UNIT WEIGHT						FOR INFORMATION ONLY
	INDEPENDENT ASSURANCE (PROCEDURAL CHECK)			**FIELD**	**DISTRICT/ AREA LAB**	**MDT HQ LAB**	**NOTES**
	AASHTO R 60 SAMPLING FRESH CONCRETE	USE FIELD TESTED SAMPLE	ONE PER 400 CU YDS (300 M^3) OR A MINIMUM OF ONE PER PROJECT		CHECK	CHECK	PROCEDURAL CHECK MAY BE PERFORMED BY THE DISTRICT/AREA LAB
	AASHTO T 152 AIR CONTENT						
	AASHTO T 119 SLUMP						
	MT 101 COMPRESSIVE STRENGTH CYLINDERS		ONE SET OF FOUR CYLINDERS PER 400 CU YDS (300 M^3) OR A MINIMUM OF ONE SET PER PROJECT				
	Mix Design			**FIELD**	**DISTRICT/ AREA LAB**	**MDT HQ LAB**	**NOTES**
	CERT/ VISUAL INSPECTION	1 EACH	ONE MIX DESIGN PER BID ITEM	MIX DESIGN		APPROVAL	CERTIFICATION IS THE CONTRACTOR'S MIX DESIGN. SEPARATE MIX DESIGNS NEEDED ONLY WHEN CONCRETE REQUIREMENTS VARY.

MATERIAL/ MATERIAL CODE	TESTS	SAMPLE SIZE	SAMPLE/TEST FREQUENCY	FIELD	DISTRICT/ AREA LAB	MDT HQ LAB	NOTES
CONTROLLED LOW STRENGTH MATERIAL - EXCAV 551.03.02.11	AASHTO R 60 SAMPLING FRESH CONCRETE	REFER TO TEST FOR SIZE		SAMPLE			
	ASTM D4832 PREPARATION AND TESTING OF CLSM	1 CU FT (0.03 M^3)	MINIMUM OF 1 SET PER LOT (100 YD^3 (100 M^3) OR EACH DAY'S POUR WHICHEVER IS LESS)	SAMPLE		TEST	
	Mix Design			**FIELD**	**DISTRICT/ AREA LAB**	**MDT HQ LAB**	**NOTES**
	CERT/ VISUAL INSPECTION	1 EACH	ONE MIX DESIGN PER BID ITEM	MIX DESIGN		APPROVAL	CERTIFICATION IS THE CONTRACTOR'S MIX DESIGN. SEPARATE MIX DESIGNS NEEDED ONLY WHEN CONCRETE REQUIREMENTS VARY.

MATERIAL/ MATERIAL CODE	TESTS	SAMPLE SIZE	SAMPLE/TEST FREQUENCY	FIELD	DISTRICT/ AREA LAB	MDT HQ LAB	NOTES
CONTROLLED LOW STRENGTH MATERIAL - NON-EXCAV 551.03.02.12	AASHTO R 60 SAMPLING FRESH CONCRETE	REFER TO TEST FOR SIZE		SAMPLE			
	ASTM D4832 PREPARATION AND TESTING OF CLSM	1 CU FT (0.03 M^3)	MINIMUM OF 1 SET PER LOT (100 YD^3 (100 M^3) OR EACH DAY'S POUR WHICHEVER IS LESS)	SAMPLE		TEST	
	Mix Design			**FIELD**	**DISTRICT/ AREA LAB**	**MDT HQ LAB**	**NOTES**
	CERT/ VISUAL INSPECTION	1 EACH	ONE MIX DESIGN PER BID ITEM	MIX DESIGN		APPROVAL	CERTIFICATION IS THE CONTRACTOR'S MIX DESIGN. SEPARATE MIX DESIGNS NEEDED ONLY WHEN CONCRETE REQUIREMENTS VARY.

MATERIAL/ MATERIAL CODE	TESTS	SAMPLE SIZE	SAMPLE/TEST FREQUENCY	FIELD	DISTRICT/ AREA LAB	MDT HQ LAB	NOTES
PRE-PACKAGED CONCRETE 551.03.02.13	CERT/ VISUAL INSPECTION	1 EACH	ONE PER PROJECT, PER TYPE	DATA SHEET			

MATERIAL/ MATERIAL CODE	TESTS	SAMPLE SIZE	SAMPLE/TEST FREQUENCY	FIELD	DISTRICT/ AREA LAB	MDT HQ LAB	NOTES
LEAN CONCRETE 551.03.02.14	CERT/ VISUAL INSPECTION	N/A	ONE PER LOAD	VISUAL			VERIFY ITEM MEETS MDT REQUIREMENTS

MATERIAL/ MATERIAL CODE	TESTS	SAMPLE SIZE	SAMPLE/TEST FREQUENCY	FIELD	DISTRICT/ AREA LAB	MDT HQ LAB	NOTES
EPOXY RESIN GROUT 552.02.01.01	CERT/ VISUAL INSPECTION	1 EACH	ONE PER LOT/BATCH	DATA SHEET			

MATERIAL/ MATERIAL CODE	TESTS	SAMPLE SIZE	SAMPLE/TEST FREQUENCY	FIELD	DISTRICT/ AREA LAB	MDT HQ LAB	NOTES
DECK DRAINS 552.03.16.01	CERT/ VISUAL INSPECTION	1 EACH	ONE PER PROJECT, PER TYPE OF DRAIN	VISUAL			

MATERIAL/ MATERIAL CODE	TESTS	SAMPLE SIZE	SAMPLE/TEST FREQUENCY	FIELD	DISTRICT/ AREA LAB	MDT HQ LAB	NOTES
PRECAST PRESTRESSED DECK SECTIONS 553.02.08.01	CERT/ VISUAL INSPECTION	1 EACH	ONE PER DECK SECTION	CERT OF COMP VISUAL			IF WELDING OCCURS, CERTIFICATE OF COMPLIANCE IS SUBMITTAL OF DOCUMENTATION PER SPECIFICATION 624.03.3
	STEEL CERT CATEGORY 2	1 EACH	ONE PER FORM 406	FORM 406			MANDATORY SUBMITTAL OF DOCUMENTATION PER SPECIFICATION 106.09
	MT 111 PRESTRESSED STRUCTURAL MEMBERS	PER MT 111	ONE PER DECK SECTION		PRE-INSPECTION		

MATERIAL/ MATERIAL CODE	TESTS	SAMPLE SIZE	SAMPLE/TEST FREQUENCY	FIELD	DISTRICT/ AREA LAB	MDT HQ LAB	NOTES
PRESTRESSED BEAM 553.02.09.01	CERT/ VISUAL INSPECTION	1 EACH	ONE PER BEAM	CERT OF COMP VISUAL			IF WELDING OCCURS, CERTIFICATE OF COMPLIANCE IS SUBMITTAL OF DOCUMENTATION PER SPECIFICATION 624.03.3
	STEEL CERT CATEGORY 2	1 EACH	ONE PER FORM 406	FORM 406			MANDATORY SUBMITTAL OF DOCUMENTATION PER SPECIFICATION 106.09
	MT 111 PRESTRESSED STRUCTURAL MEMBERS	PER MT 111	ONE PER BEAM		PRE-INSPECTION		

MATERIAL/ MATERIAL CODE	TESTS	SAMPLE SIZE	SAMPLE/TEST FREQUENCY	FIELD	DISTRICT/ AREA LAB	MDT HQ LAB	NOTES
PRECAST CONCRETE BRIDGE MEMBERS 554.04.03.01	CERT/ VISUAL INSPECTION	1 EACH	ONE PER MEMBER	CERT OF COMP VISUAL			IF WELDING OCCURS, CERTIFICATE OF COMPLIANCE IS SUBMITTAL OF DOCUMENTATION PER SPECIFICATION 624.03.3
	STEEL CERT CATEGORY 2	1 EACH	ONE PER FORM 406	FORM 406			MANDATORY SUBMITTAL OF DOCUMENTATION PER SPECIFICATION 106.09
	ASTM A416 SEVEN WIRE STRAND	8 FT (3 M)	ONE PER LOT	SAMPLE		TEST	REQUIRED ONLY WHEN MEMBER IS POST-TENSIONED
	MT 110 RCP AND ASSOCIATED ITEMS	PER MT 111	ONE PER MEMBER		PRE-INSPECTION		

MATERIAL/ MATERIAL CODE	TESTS	SAMPLE SIZE	SAMPLE/TEST FREQUENCY	FIELD	DISTRICT/ AREA LAB	MDT HQ LAB	NOTES
CATTLE GUARD BASES 554.04.04.01	CERT/ VISUAL INSPECTION	1 EACH	ONE PER EACH	VISUAL			PRE-INSPECTION IS NOT REQUIRED IF ITEM IS PRODUCED AT A CERTIFIED PLANT (QPL)
	STEEL CERT CATEGORY 2	1 EACH	ONE PER FORM 406	FORM 406			
	MT 110 RCP AND ASSOCIATED ITEMS	N/A	REFER TO MT 110 FOR SAMPLE/TEST FREQUENCY		PRE-INSPECTION		

MATERIAL/ MATERIAL CODE	TESTS	SAMPLE SIZE	SAMPLE/TEST FREQUENCY	FIELD	DISTRICT/ AREA LAB	MDT HQ LAB	NOTES
PRECAST CONCRETE PRODUCT - STRUCTURAL 554.04.06.01	CERT/ VISUAL INSPECTION	1 EACH	ONE PER EACH	CERT OF COMP VISUAL			IF WELDING OCCURS, CERTIFICATE OF COMPLIANCE IS SUBMITTAL OF DOCUMENTATION PER SPECIFICATION 624.03.3
	STEEL CERT CATEGORY 2	1 EACH	ONE PER FORM 406	FORM 406			MANDATORY SUBMITTAL OF DOCUMENTATION PER SPECIFICATION 106.09
	MT 110 RCP AND ASSOCIATED ITEMS	N/A	REFER TO MT 110 FOR SAMPLE/TEST FREQUENCY		PRE-INSPECTION		

MATERIAL/ MATERIAL CODE	TESTS	SAMPLE SIZE	SAMPLE/TEST FREQUENCY	FIELD	DISTRICT/ AREA LAB	MDT HQ LAB	NOTES
PRECAST CONCRETE PRODUCT - NON STRUCTURAL 554.04.06.02	CERT/ VISUAL INSPECTION	N/A	ONE PER EACH	VISUAL			
	STEEL CERT CATEGORY 2	1 EACH	ONE PER FORM 406	FORM 406			MANDATORY SUBMITTAL OF DOCUMENTATION PER SPECIFICATION 106.09
	MT 110 RCP AND ASSOCIATED ITEMS	N/A	REFER TO MT 110 FOR SAMPLE/TEST FREQUENCY		PRE-INSPECTION		

MATERIAL/ MATERIAL CODE	TESTS	SAMPLE SIZE	SAMPLE/TEST FREQUENCY	FIELD	DISTRICT/ AREA LAB	MDT HQ LAB	NOTES
WATERPROOF MEMBRANE 563.02.01.08	CERT/ VISUAL INSPECTION	1 EACH	ONE PER PROJECT, PER TYPE	DATA SHEET			

MATERIAL/ MATERIAL CODE	TESTS	SAMPLE SIZE	SAMPLE/TEST FREQUENCY	FIELD	DISTRICT/ AREA LAB	MDT HQ LAB	NOTES
LIQUID MEMBRANE-FORMING CONCRETE CURING COMPOUND 717.01.03.01	CERT/ VISUAL INSPECTION	1 EACH	ONE PER PRODUCT	DATA SHEET			

MATERIAL/ MATERIAL CODE	TESTS	SAMPLE SIZE	SAMPLE/TEST FREQUENCY	FIELD	DISTRICT/ AREA LAB	MDT HQ LAB	NOTES
CONCRETE CURE AND SEAL COMPOUNDS 717.01.04.01	CERT/ VISUAL INSPECTION	1 EACH	ONE PER PRODUCT	DATA SHEET			

MATERIAL/ MATERIAL CODE	TESTS	SAMPLE SIZE	SAMPLE/TEST FREQUENCY	FIELD	DISTRICT/ AREA LAB	MDT HQ LAB	NOTES
HIGH MOLECULAR WEIGHT METHACRYLATE (HMWM) 717.02.02.01	CERT/ VISUAL INSPECTION	1 EACH	ONE PER LOT/BATCH NUMBER	DATA SHEET			ACCEPTANCE ONLY FROM THE QUALIFIED PRODUCTS LIST
	MT 535 HMWM IR TEST	2 - 4 OZ (2 - 120 mL) PLASTIC BOTTLES		SAMPLE		TEST	SAMPLE REQUIRED TO BE TAKEN FROM JOB SITE

MATERIAL/ MATERIAL CODE	TESTS	SAMPLE SIZE	SAMPLE/TEST FREQUENCY	FIELD	DISTRICT/ AREA LAB	MDT HQ LAB	NOTES
EPOXY BRIDGE DECK CRACK SEALANT 717.02.03.01	CERT/ VISUAL INSPECTION	1 EACH	ONE PER LOT/BATCH NUMBER	DATA SHEET			ACCEPTANCE ONLY FROM THE QUALIFIED PRODUCTS LIST

CONCRETE SEALANT

SPECIALS, SUPPLEMENTAL AND STANDARD SPECS, DETAILED DWGS

MATERIAL/ MATERIAL CODE	TESTS	SAMPLE SIZE	SAMPLE/TEST FREQUENCY	FIELD	DISTRICT/ AREA LAB	MDT HQ LAB	NOTES
SILANE SEALER 717.02.01.01	CERT/ VISUAL INSPECTION	1 EACH	ONE PER PRODUCT	DATA SHEET			ACCEPTANCE ONLY FROM THE QUALIFIED PRODUCTS LIST

MATERIAL/ MATERIAL CODE	TESTS	SAMPLE SIZE	SAMPLE/TEST FREQUENCY	FIELD	DISTRICT/ AREA LAB	MDT HQ LAB	NOTES
DECK SEALANT SAND 717.02.04.01	CERT/ VISUAL INSPECTION	1 EACH	ONE PER PROJECT	DATA SHEET			CERTIFICATION IS THE GRADATION ON THE CONTAINER

CRACK SEALING

SPECIALS, SUPPLEMENTAL AND STANDARD SPECS, DETAILED DWGS

MATERIAL/ MATERIAL CODE	TESTS	SAMPLE SIZE	SAMPLE/TEST FREQUENCY	FIELD	DISTRICT/ AREA LAB	MDT HQ LAB	NOTES
CRACK SEALANT 403.02.00.01L 403.02.00.01W	CERT/ VISUAL INSPECTION	1 EACH	ONE PER LOT/BATCH	DATA SHEET			ACCEPTANCE ONLY FROM THE QUALIFIED PRODUCTS LIST
	ASTM D6690	30 LBS	AS REQUESTED	SAMPLE		TEST	

MATERIAL/ MATERIAL CODE	TESTS	SAMPLE SIZE	SAMPLE/TEST FREQUENCY	FIELD	DISTRICT/ AREA LAB	MDT HQ LAB	NOTES
BACKER ROD 403.02.00.02L 403.02.00.02W	CERT/ VISUAL INSPECTION	1 EACH	ONE PER PRODUCT	DATA SHEET			ACCEPTANCE ONLY FROM THE QUALIFIED PRODUCTS LIST

MATERIAL/ MATERIAL CODE	TESTS	SAMPLE SIZE	SAMPLE/TEST FREQUENCY	FIELD	DISTRICT/ AREA LAB	MDT HQ LAB	NOTES
SPECIAL BORROW 203.01.01.02	MT 201 SAMPLING	77 LBS (35 KG)	EACH SOURCE OF SPECIAL BORROW IS SUBJECT TO APPROVAL PRIOR TO PLACEMENT (ONE BORROW SOURCE PER 65,000 CU YDS (50,000 M^3)) MINIMUM EIGHT SAMPLES PER BORROW SOURCE 85% OF THE TESTS MUST MEET SOILS CLASSIFICATION OR R-VALUE REQUIREMENT	SAMPLE			
	MT 202 SIEVE ANALYSIS				TEST		
	MT 208 LIQUID LIMIT						
	MT 208A PLASTIC LIMIT & PLASTICITY INDEX						
	MT 214 SOIL CLASS						
	MT 210 (5.5LB) PROCTOR						
	MT 230 (10LB) PROCTOR						
	MT 231 COARSE PARTICLE CORRECTION						PERFORMED WHEN REQUIRED PER MT 210 OR MT 230
	AASHTO T 190 R-VALUE					TEST	TEST REQUIRED IF SPECIFIED IN THE SPECIAL PROVISIONS
	MT 212 COMPACTION AND % MOISTURE (IN-PLACE DENSITY)	N/A	MINIMUM OF ONE TEST PER 2000 CU YDS (1500 M^3) AND A MINIMUM OF ONE TEST PER LIFT	TEST			
	MT 218 RELATIVE COMPACTION AND % MOISTURE						
	INDEPENDENT ASSURANCE (PROCEDURAL CHECK)			**FIELD**	**DISTRICT/ AREA LAB**	**MDT HQ LAB**	**NOTES**
	MT 212 COMPACTION AND % MOISTURE (IN-PLACE DENSITY)	N/A	ONE PER EACH MILE OR ONE PER EVERY 100,000 CU YDS (75,000 M^3)		CHECK		

MATERIAL/ MATERIAL CODE	TESTS	SAMPLE SIZE	SAMPLE/TEST FREQUENCY	FIELD	DISTRICT/ AREA LAB	MDT HQ LAB	NOTES
EMBANKMENT 203.01.02.01	MT 201 SAMPLING	77 LBS (35 KG)	TEST MATERIAL AS NEEDED FOR SOILS CLASSIFICATION AND/OR PROCTOR	SAMPLE			
	MT 202 SIEVE ANALYSIS				TEST		
	MT 208 LIQUID LIMIT						
	MT 208A PLASTIC LIMIT & PLASTICITY INDEX						
	MT 214 SOIL CLASS						
	MT 229 ZERO AIR VOIDS						SECONDARY TEST INTERIM MEASURE UNTIL A PROCTOR CAN BE PERFORMED
	MT 210 (5.5LB) PROCTOR						
	MT 230 (10LB) PROCTOR						
	MT 231 COARSE PARTICLE CORRECTION						PERFORMED WHEN REQUIRED PER MT 210 OR MT 230
	MT 220 SPECIFIC GRAVITY						
	MT 212 COMPACTION AND % MOISTURE (IN-PLACE DENSITY)	N/A	MINIMUM OF ONE TEST PER 2000 CU YDS (1500 M^3) AND A MINIMUM OF ONE TEST PER LIFT	TEST			
	MT 218 RELATIVE COMPACTION AND % MOISTURE						
	INDEPENDENT ASSURANCE (PROCEDURAL CHECK)			**FIELD**	**DISTRICT/ AREA LAB**	**MDT HQ LAB**	**NOTES**
	MT 212 COMPACTION AND % MOISTURE (IN-PLACE DENSITY)	N/A	ONE PER EACH MILE OR ONE PER EVERY 100,000 CU YDS (75,000 M^3)		CHECK		

MATERIAL/ MATERIAL CODE	TESTS	SAMPLE SIZE	SAMPLE/TEST FREQUENCY	FIELD	DISTRICT/ AREA LAB	MDT HQ LAB	NOTES
STEMMING AGGREGATE FOR BLASTING 203.03.01.01	MT 201 SAMPLING	30 LBS (14 KG)	ONE TEST PER SOURCE	SAMPLE			
	MT 202 SIEVE ANALYSIS				TEST		
	MT 208A PLASTIC LIMIT & PLASTICITY INDEX						
	MT 217 FRACTURE						

MATERIAL/ MATERIAL CODE	TESTS	SAMPLE SIZE	SAMPLE/TEST FREQUENCY	FIELD	DISTRICT/ AREA LAB	MDT HQ LAB	NOTES
SNOW FENCE MATERIAL 607.02.01.01	CERT/ VISUAL INSPECTION	N/A	ONE PER LOT	VISUAL			VERIFY SEAL NUMBERS CORRESPOND WITH PRE-INSPECTION RECORDS
	MT 404 INSPECTING WOOD PRODUCTS	20 BORINGS	ONE PER CHARGE		PRE-INSPECTION		

MATERIAL/ MATERIAL CODE	TESTS	SAMPLE SIZE	SAMPLE/TEST FREQUENCY	FIELD	DISTRICT/ AREA LAB	MDT HQ LAB	NOTES
CHAIN LINK FABRIC 712.01.02.01	CERT/ VISUAL INSPECTION	1 EACH	ONE PER PRODUCT	DATA SHEET VISUAL			
	STEEL CERT CATEGORY 2	1 EACH	ONE PER FORM 406	FORM 406			MANDATORY SUBMITTAL OF DOCUMENTATION PER SPECIFICATION 106.09

MATERIAL/ MATERIAL CODE	TESTS	SAMPLE SIZE	SAMPLE/TEST FREQUENCY	FIELD	DISTRICT/ AREA LAB	MDT HQ LAB	NOTES
CHAIN LINK STEEL POST 712.01.03.01	CERT/ VISUAL INSPECTION	1 EACH	ONE PER EACH	DATA SHEET VISUAL			
	STEEL CERT CATEGORY 2	1 EACH	ONE PER FORM 406	FORM 406			MANDATORY SUBMITTAL OF DOCUMENTATION PER SPECIFICATION 106.09

MATERIAL/ MATERIAL CODE	TESTS	SAMPLE SIZE	SAMPLE/TEST FREQUENCY	FIELD	DISTRICT/ AREA LAB	MDT HQ LAB	NOTES
CHAIN LINK ALUMINUM POST 712.01.03.03	CERT/ VISUAL INSPECTION	1 EACH	ONE PER LOT	DATA SHEET VISUAL			VERIFY ITEM MEETS MDT REQUIREMENTS AND ATTACH APPLICABLE CERT

MATERIAL/ MATERIAL CODE	TESTS	SAMPLE SIZE	SAMPLE/TEST FREQUENCY	FIELD	DISTRICT/ AREA LAB	MDT HQ LAB	NOTES
CABLE/TIE/BRACE WIRE 712.01.06.01	CERT/ VISUAL INSPECTION	1 EACH	ONE PER EACH	DATA SHEET VISUAL			
	STEEL CERT CATEGORY 2	1 EACH	ONE PER FORM 406	FORM 406			MANDATORY SUBMITTAL OF DOCUMENTATION PER SPECIFICATION 106.09

MATERIAL/ MATERIAL CODE	TESTS	SAMPLE SIZE	SAMPLE/TEST FREQUENCY	FIELD	DISTRICT/ AREA LAB	MDT HQ LAB	NOTES
CHAIN LINK GATE 712.01.08.01	CERT/ VISUAL INSPECTION	1 EACH	ONE PER EACH	DATA SHEET VISUAL			
	STEEL CERT CATEGORY 2	1 EACH	ONE PER FORM 406	FORM 406			MANDATORY SUBMITTAL OF DOCUMENTATION PER SPECIFICATION 106.09

MATERIAL/ MATERIAL CODE	TESTS	SAMPLE SIZE	SAMPLE/TEST FREQUENCY	FIELD	DISTRICT/ AREA LAB	MDT HQ LAB	NOTES
FENCE WIRE 712.02.00.01	CERT/ VISUAL INSPECTION	1 EACH	ONE PER PRODUCT	DATA SHEET VISUAL			
	STEEL CERT CATEGORY 2	1 EACH	ONE PER FORM 406	FORM 406			MANDATORY SUBMITTAL OF DOCUMENTATION PER SPECIFICATION 106.09

MATERIAL/ MATERIAL CODE	TESTS	SAMPLE SIZE	SAMPLE/TEST FREQUENCY	FIELD	DISTRICT/ AREA LAB	MDT HQ LAB	NOTES
STEEL FENCE POST 712.02.07.01	CERT/ VISUAL INSPECTION	1 EACH	ONE PER PRODUCT	DATA SHEET VISUAL			
	STEEL CERT CATEGORY 2	1 EACH	ONE PER FORM 406	FORM 406			MANDATORY SUBMITTAL OF DOCUMENTATION PER SPECIFICATION 106.09

FENCING

SPECIALS, SUPPLEMENTAL AND STANDARD SPECS, DETAILED DWGS

MATERIAL/ MATERIAL CODE	TESTS	SAMPLE SIZE	SAMPLE/TEST FREQUENCY	FIELD	DISTRICT/ AREA LAB	MDT HQ LAB	NOTES
WOOD FENCE POST/BRACE RAIL 712.02.08.01	CERT/ VISUAL INSPECTION	N/A	ONE PER LOT	VISUAL			VERIFY SEAL NUMBERS CORRESPOND WITH PRE-INSPECTION RECORDS
	MT 404 INSPECTING WOOD PRODUCTS	20 BORINGS	ONE PER CHARGE		PRE-INSPECTION		

MATERIAL/ MATERIAL CODE	TESTS	SAMPLE SIZE	SAMPLE/TEST FREQUENCY	FIELD	DISTRICT/ AREA LAB	MDT HQ LAB	NOTES
METAL GATE 712.02.09.01	CERT/ VISUAL INSPECTION	1 EACH	ONE PER EACH	DATA SHEET VISUAL			
	STEEL CERT CATEGORY 2	1 EACH	ONE PER FORM 406	FORM 406			MANDATORY SUBMITTAL OF DOCUMENTATION PER SPECIFICATION 106.09

MATERIAL/ MATERIAL CODE	TESTS	SAMPLE SIZE	SAMPLE/TEST FREQUENCY	FIELD	DISTRICT/ AREA LAB	MDT HQ LAB	NOTES
DEADMAN/ ANCHOR 712.02.12.01	CERT/ VISUAL INSPECTION	1 EACH	ONE PER FABRICATOR	DATA SHEET VISUAL			VERIFY ITEM MEETS MDT REQUIREMENTS AND ATTACH APPLICABLE CERT

MATERIAL/ MATERIAL CODE	TESTS	SAMPLE SIZE	SAMPLE/TEST FREQUENCY	FIELD	DISTRICT/ AREA LAB	MDT HQ LAB	NOTES
GEOGRID - SUBGRADE/ FOUNDATION 622.01.01.01	CERT/ VISUAL INSPECTION	1 EACH	ONE PER LOT OR BATCH	CERT OF COMP			
	ASTM D6637 TENSILE PROPERTIES OF GEOGRID	3 FT (1 M) X WIDTH	ONE PER 10,000 SQ YD (8,000 M^2)	SAMPLE		TEST	

MATERIAL/ MATERIAL CODE	TESTS	SAMPLE SIZE	SAMPLE/TEST FREQUENCY	FIELD	DISTRICT/ AREA LAB	MDT HQ LAB	NOTES
GEOGRID - SLOPE REINFORCEMENT 622.01.01.02	CERT/ VISUAL INSPECTION	1 EACH	ONE PER LOT OR BATCH	CERT OF COMP			
	ASTM D6637 TENSILE PROPERTIES OF GEOGRID	3 FT (1 M) X WIDTH	ONE PER 10,000 SQ YD (8,000 M^2)	SAMPLE		TEST	

MATERIAL/ MATERIAL CODE	TESTS	SAMPLE SIZE	SAMPLE/TEST FREQUENCY	FIELD	DISTRICT/ AREA LAB	MDT HQ LAB	NOTES
GEOGRID - WALL REINFORCEMENT 622.01.01.03	CERT/ VISUAL INSPECTION	1 EACH	ONE PER LOT OR BATCH	CERT OF COMP			
	ASTM D6637 TENSILE PROPERTIES OF GEOGRID	3 FT (1 M) X WIDTH	ONE PER 10,000 SQ YD (8,000 M^2)	SAMPLE		TEST	

MATERIAL/ MATERIAL CODE	TESTS	SAMPLE SIZE	SAMPLE/TEST FREQUENCY	FIELD	DISTRICT/ AREA LAB	MDT HQ LAB	NOTES
GEOCOMPOSITE DRAIN 622.02.01.01	CERT/ VISUAL INSPECTION	1 EACH	ONE PER LOT OR BATCH	CERT OF COMP			SUBMIT SAMPLE OF MATERIAL TO GEOTECHNICAL SECTION FOR REVIEW

MATERIAL/ MATERIAL CODE	TESTS	SAMPLE SIZE	SAMPLE/TEST FREQUENCY	FIELD	DISTRICT/ AREA LAB	MDT HQ LAB	NOTES
WEED CONTROL MAT 713.06.00.01	CERT/ VISUAL INSPECTION	1 EACH	ONE PER LOT OR BATCH	DATA SHEET			

MATERIAL/ MATERIAL CODE	TESTS	SAMPLE SIZE	SAMPLE/TEST FREQUENCY	FIELD	DISTRICT/ AREA LAB	MDT HQ LAB	NOTES
TURF REINFORCEMENT MAT - SYNTHETIC FIBER 713.12.00.04	CERT/ VISUAL INSPECTION	1 EACH	ONE PER LOT OR BATCH	CERT OF COMP OR DATA SHEET			CERTIFICATE OF COMPLIANCE IS REQUIRED FOR ALL EROSION CONTROL THAT CONTAINS STRAW ACCEPTANCE ONLY FROM THE QUALIFIED PRODUCTS LIST

MATERIAL/ MATERIAL CODE	TESTS	SAMPLE SIZE	SAMPLE/TEST FREQUENCY	FIELD	DISTRICT/ AREA LAB	MDT HQ LAB	NOTES
TURF REINFORCEMENT MAT - NATURAL FIBER 713.12.00.05	CERT/ VISUAL INSPECTION	1 EACH	ONE PER LOT OR BATCH	CERT OF COMP OR DATA SHEET			CERTIFICATE OF COMPLIANCE IS REQUIRED FOR ALL EROSION CONTROL THAT CONTAINS STRAW ACCEPTANCE ONLY FROM THE QUALIFIED PRODUCTS LIST

MATERIAL/ MATERIAL CODE	TESTS	SAMPLE SIZE	SAMPLE/TEST FREQUENCY	FIELD	DISTRICT/ AREA LAB	MDT HQ LAB	NOTES
SHORT TERM ROLLED EROSION CONTROL BLANKET 713.12.00.06	CERT/ VISUAL INSPECTION	1 EACH	ONE PER LOT OR BATCH	CERT OF COMP OR DATA SHEET			CERTIFICATE OF COMPLIANCE IS REQUIRED FOR ALL EROSION CONTROL THAT CONTAINS STRAW ACCEPTANCE ONLY FROM THE QUALIFIED PRODUCTS LIST

MATERIAL/ MATERIAL CODE	TESTS	SAMPLE SIZE	SAMPLE/TEST FREQUENCY	FIELD	DISTRICT/ AREA LAB	MDT HQ LAB	NOTES
LONG TERM ROLLED EROSION CONTROL BLANKET 713.12.00.07	CERT/ VISUAL INSPECTION	1 EACH	ONE PER LOT OR BATCH	CERT OF COMP OR DATA SHEET			CERTIFICATE OF COMPLIANCE IS REQUIRED FOR ALL EROSION CONTROL THAT CONTAINS STRAW ACCEPTANCE ONLY FROM THE QUALIFIED PRODUCTS LIST

MATERIAL/ MATERIAL CODE	TESTS	SAMPLE SIZE	SAMPLE/TEST FREQUENCY	FIELD	DISTRICT/ AREA LAB	MDT HQ LAB	NOTES
HIGH PERFORMANCE ROLLED EROSION CONTROL BLANKET 713.12.00.08	CERT/ VISUAL INSPECTION	1 EACH	ONE PER LOT OR BATCH	CERT OF COMP OR DATA SHEET			CERTIFICATE OF COMPLIANCE IS REQUIRED FOR ALL EROSION CONTROL THAT CONTAINS STRAW ACCEPTANCE ONLY FROM THE QUALIFIED PRODUCTS LIST

MATERIAL/ MATERIAL CODE	TESTS	SAMPLE SIZE	SAMPLE/TEST FREQUENCY	FIELD	DISTRICT/ AREA LAB	MDT HQ LAB	NOTES
GEOTEXTILE SEPARATION - HIGH SURVIVABILITY 716.02.00.01	CERT/ VISUAL INSPECTION	1 EACH	ONE PER LOT OR BATCH	CERT OF COMP			QUALIFIED PRODUCTS LIST
	ASTM D4491 PERMITTIVITY	PER MT 421	ONE PER 10,000 SQ YDS (8,000 M^2)	SAMPLE		TEST	SAMPLE REQUIRED ONLY IF NOT ON THE QUALIFIED PRODUCTS LIST
	ASTM D4751 OPENING SIZE						
	ASTM D4355 DETERIORATION						

MATERIAL/ MATERIAL CODE	TESTS	SAMPLE SIZE	SAMPLE/TEST FREQUENCY	FIELD	DISTRICT/ AREA LAB	MDT HQ LAB	NOTES
GEOTEXTILE SEPARATION - MODERATE SURVIVABILITY 716.02.00.02	CERT/ VISUAL INSPECTION	1 EACH	ONE PER LOT OR BATCH	CERT OF COMP			QUALIFIED PRODUCTS LIST
	ASTM D4491 PERMITTIVITY	PER MT 421	ONE PER 10,000 SQ YDS (8,000 M^2)	SAMPLE		TEST	SAMPLE REQUIRED ONLY IF NOT ON THE QUALIFIED PRODUCTS LIST
	ASTM D4751 OPENING SIZE						
	ASTM D4355 DETERIORATION						

MATERIAL/ MATERIAL CODE	TESTS	SAMPLE SIZE	SAMPLE/TEST FREQUENCY	FIELD	DISTRICT/ AREA LAB	MDT HQ LAB	NOTES
GEOTEXTILE STABILIZATION - HIGH SURVIVABILITY 716.03.00.01	CERT/ VISUAL INSPECTION	1 EACH	ONE PER LOT OR BATCH	CERT OF COMP			QUALIFIED PRODUCTS LIST
	ASTM D4491 PERMITTIVITY	PER MT 421	ONE PER 10,000 SQ YDS (8,000 M^2)	SAMPLE		TEST	SAMPLE REQUIRED ONLY IF NOT ON THE QUALIFIED PRODUCTS LIST
	ASTM D4751 OPENING SIZE						
	ASTM D4355 DETERIORATION						

MATERIAL/ MATERIAL CODE	TESTS	SAMPLE SIZE	SAMPLE/TEST FREQUENCY	FIELD	DISTRICT/ AREA LAB	MDT HQ LAB	NOTES
GEOTEXTILE SUB DRAIN CLASS A - HIGH SURVIVABILITY 716.04.00.01	CERT/ VISUAL INSPECTION	1 EACH	ONE PER LOT OR BATCH	CERT OF COMP			QUALIFIED PRODUCTS LIST
	ASTM D4491 PERMITTIVITY	PER MT 421	ONE PER 10,000 SQ YDS (8,000 M^2)	SAMPLE		TEST	SAMPLE REQUIRED ONLY IF NOT ON THE QUALIFIED PRODUCTS LIST
	ASTM D4751 OPENING SIZE						
	ASTM D4355 DETERIORATION						

MATERIAL/ MATERIAL CODE	TESTS	SAMPLE SIZE	SAMPLE/TEST FREQUENCY	FIELD	DISTRICT/ AREA LAB	MDT HQ LAB	NOTES
GEOTEXTILE SUB DRAIN CLASS B - HIGH SURVIVABILITY 716.04.00.02	CERT/ VISUAL INSPECTION	1 EACH	ONE PER LOT OR BATCH	CERT OF COMP			QUALIFIED PRODUCTS LIST
	ASTM D4491 PERMITTIVITY	PER MT 421	ONE PER 10,000 SQ YDS (8,000 M^2)	SAMPLE		TEST	SAMPLE REQUIRED ONLY IF NOT ON THE QUALIFIED PRODUCTS LIST
	ASTM D4751 OPENING SIZE						
	ASTM D4355 DETERIORATION						

MATERIAL/ MATERIAL CODE	TESTS	SAMPLE SIZE	SAMPLE/TEST FREQUENCY	FIELD	DISTRICT/ AREA LAB	MDT HQ LAB	NOTES
GEOTEXTILE SUB DRAIN CLASS C - HIGH SURVIVABILITY 716.04.00.03	CERT/ VISUAL INSPECTION	1 EACH	ONE PER LOT OR BATCH	CERT OF COMP			QUALIFIED PRODUCTS LIST
	ASTM D4491 PERMITTIVITY	PER MT 421	ONE PER 10,000 SQ YDS (8,000 M^2)	SAMPLE		TEST	SAMPLE REQUIRED ONLY IF NOT ON THE QUALIFIED PRODUCTS LIST
	ASTM D4751 OPENING SIZE						
	ASTM D4355 DETERIORATION						

MATERIAL/ MATERIAL CODE	TESTS	SAMPLE SIZE	SAMPLE/TEST FREQUENCY	FIELD	DISTRICT/ AREA LAB	MDT HQ LAB	NOTES
GEOTEXTILE SUB DRAIN CLASS A - MODERATE SURVIVABILITY 716.04.00.04	CERT/ VISUAL INSPECTION	1 EACH	ONE PER LOT OR BATCH	CERT OF COMP			QUALIFIED PRODUCTS LIST
	ASTM D4491 PERMITTIVITY	PER MT 421	ONE PER 10,000 SQ YDS (8,000 M^2)	SAMPLE		TEST	SAMPLE REQUIRED ONLY IF NOT ON THE QUALIFIED PRODUCTS LIST
	ASTM D4751 OPENING SIZE						
	ASTM D4355 DETERIORATION						

MATERIAL/ MATERIAL CODE	TESTS	SAMPLE SIZE	SAMPLE/TEST FREQUENCY	FIELD	DISTRICT/ AREA LAB	MDT HQ LAB	NOTES
GEOTEXTILE SUB DRAIN CLASS B - MODERATE SURVIVABILITY 716.04.00.05	CERT/ VISUAL INSPECTION	1 EACH	ONE PER LOT OR BATCH	CERT OF COMP			QUALIFIED PRODUCTS LIST
	ASTM D4491 PERMITTIVITY	PER MT 421	ONE PER 10,000 SQ YDS (8,000 M^2)	SAMPLE		TEST	SAMPLE REQUIRED ONLY IF NOT ON THE QUALIFIED PRODUCTS LIST
	ASTM D4751 OPENING SIZE						
	ASTM D4355 DETERIORATION						

MATERIAL/ MATERIAL CODE	TESTS	SAMPLE SIZE	SAMPLE/TEST FREQUENCY	FIELD	DISTRICT/ AREA LAB	MDT HQ LAB	NOTES
GEOTEXTILE SUB DRAIN CLASS C - MODERATE SURVIVABILITY 716.04.00.06	CERT/ VISUAL INSPECTION	1 EACH	ONE PER LOT OR BATCH	CERT OF COMP			QUALIFIED PRODUCTS LIST
	ASTM D4491 PERMITTIVITY	PER MT 421	ONE PER 10,000 SQ YDS (8,000 M^2)	SAMPLE		TEST	SAMPLE REQUIRED ONLY IF NOT ON THE QUALIFIED PRODUCTS LIST
	ASTM D4751 OPENING SIZE						
	ASTM D4355 DETERIORATION						

MATERIAL/ MATERIAL CODE	TESTS	SAMPLE SIZE	SAMPLE/TEST FREQUENCY	FIELD	DISTRICT/ AREA LAB	MDT HQ LAB	NOTES
GEOSYNTHETIC CLAY LINER 716.04.00.07	CERT/ VISUAL INSPECTION	1 EACH	ONE PER LOT OR BATCH	CERT OF COMP			

MATERIAL/ MATERIAL CODE	TESTS	SAMPLE SIZE	SAMPLE/TEST FREQUENCY	FIELD	DISTRICT/ AREA LAB	MDT HQ LAB	NOTES
GEOMEMBRANE LINER 716.04.00.08	CERT/ VISUAL INSPECTION	1 EACH	ONE PER LOT OR BATCH	CERT OF COMP			SUBMIT SAMPLE OF MATERIAL TO GEOTECHNICAL SECTION FOR REVIEW

MATERIAL/ MATERIAL CODE	TESTS	SAMPLE SIZE	SAMPLE/TEST FREQUENCY	FIELD	DISTRICT/ AREA LAB	MDT HQ LAB	NOTES
GEOTEXTILE PERMANENT EROSION CONTROL CLASS A - HIGH SURVIVABILITY 716.05.00.01	CERT/ VISUAL INSPECTION	1 EACH	ONE PER LOT OR BATCH	CERT OF COMP			QUALIFIED PRODUCTS LIST
	ASTM D4491 PERMITTIVITY	PER MT 421	ONE PER 10,000 SQ YDS (8,000 M^2)	SAMPLE		TEST	SAMPLE REQUIRED ONLY IF NOT ON THE QUALIFIED PRODUCTS LIST
	ASTM D4751 OPENING SIZE						
	ASTM D4355 DETERIORATION						

MATERIAL/ MATERIAL CODE	TESTS	SAMPLE SIZE	SAMPLE/TEST FREQUENCY	FIELD	DISTRICT/ AREA LAB	MDT HQ LAB	NOTES
GEOTEXTILE PERMANENT EROSION CONTROL CLASS B - HIGH SURVIVABILITY 716.05.00.02	CERT/ VISUAL INSPECTION	1 EACH	ONE PER LOT OR BATCH	CERT OF COMP			QUALIFIED PRODUCTS LIST
	ASTM D4491 PERMITTIVITY	PER MT 421	ONE PER 10,000 SQ YDS (8,000 M^2)	SAMPLE		TEST	SAMPLE REQUIRED ONLY IF NOT ON THE QUALIFIED PRODUCTS LIST
	ASTM D4751 OPENING SIZE						
	ASTM D4355 DETERIORATION						

MATERIAL/ MATERIAL CODE	TESTS	SAMPLE SIZE	SAMPLE/TEST FREQUENCY	FIELD	DISTRICT/ AREA LAB	MDT HQ LAB	NOTES
GEOTEXTILE PERMANENT EROSION CONTROL CLASS C - HIGH SURVIVABILITY 716.05.00.03	CERT/ VISUAL INSPECTION	1 EACH	ONE PER LOT OR BATCH	CERT OF COMP			QUALIFIED PRODUCTS LIST
	ASTM D4491 PERMITTIVITY	PER MT 421	ONE PER 10,000 SQ YDS (8,000 M^2)	SAMPLE		TEST	SAMPLE REQUIRED ONLY IF NOT ON THE QUALIFIED PRODUCTS LIST
	ASTM D4751 OPENING SIZE						
	ASTM D4355 DETERIORATION						

MATERIAL/ MATERIAL CODE	TESTS	SAMPLE SIZE	SAMPLE/TEST FREQUENCY	FIELD	DISTRICT/ AREA LAB	MDT HQ LAB	NOTES
GEOTEXTILE PERMANENT EROSION CONTROL CLASS A - MODERATE SURVIVABILITY 716.05.00.04	CERT/ VISUAL INSPECTION	1 EACH	ONE PER LOT OR BATCH	CERT OF COMP			QUALIFIED PRODUCTS LIST
	ASTM D4491 PERMITTIVITY	PER MT 421	ONE PER 10,000 SQ YDS (8,000 M^2)	SAMPLE		TEST	SAMPLE REQUIRED ONLY IF NOT ON THE QUALIFIED PRODUCTS LIST
	ASTM D4751 OPENING SIZE						
	ASTM D4355 DETERIORATION						

MATERIAL/ MATERIAL CODE	TESTS	SAMPLE SIZE	SAMPLE/TEST FREQUENCY	FIELD	DISTRICT/ AREA LAB	MDT HQ LAB	NOTES
GEOTEXTILE PERMANENT EROSION CONTROL CLASS B - MODERATE SURVIVABILITY 716.05.00.05	CERT/ VISUAL INSPECTION	1 EACH	ONE PER LOT OR BATCH	CERT OF COMP			QUALIFIED PRODUCTS LIST
	ASTM D4491 PERMITTIVITY	PER MT 421	ONE PER 10,000 SQ YDS (8,000 M^2)	SAMPLE		TEST	SAMPLE REQUIRED ONLY IF NOT ON THE QUALIFIED PRODUCTS LIST
	ASTM D4751 OPENING SIZE						
	ASTM D4355 DETERIORATION						

MATERIAL/ MATERIAL CODE	TESTS	SAMPLE SIZE	SAMPLE/TEST FREQUENCY	FIELD	DISTRICT/ AREA LAB	MDT HQ LAB	NOTES
GEOTEXTILE PERMANENT EROSION CONTROL CLASS C - MODERATE SURVIVABILITY 716.05.00.06	CERT/ VISUAL INSPECTION	1 EACH	ONE PER LOT OR BATCH	CERT OF COMP			QUALIFIED PRODUCTS LIST
	ASTM D4491 PERMITTIVITY	PER MT 421	ONE PER 10,000 SQ YDS (8,000 M^2)	SAMPLE		TEST	SAMPLE REQUIRED ONLY IF NOT ON THE QUALIFIED PRODUCTS LIST
	ASTM D4751 OPENING SIZE						
	ASTM D4355 DETERIORATION						

MATERIAL/ MATERIAL CODE	TESTS	SAMPLE SIZE	SAMPLE/TEST FREQUENCY	FIELD	DISTRICT/ AREA LAB	MDT HQ LAB	NOTES
TEMPORARY SILT FENCE 716.06.00.00	CERT/ VISUAL INSPECTION	1 EACH	ONE PER LOT OR BATCH	DATA SHEET			

MATERIAL/ MATERIAL CODE	TESTS	SAMPLE SIZE	SAMPLE/TEST FREQUENCY	FIELD	DISTRICT/ AREA LAB	MDT HQ LAB	NOTES
BOX BEAM GUARDRAIL 705.01.01.01	CERT/ VISUAL INSPECTION	1 EACH	ONE PER EACH	DATA SHEET VISUAL			
	STEEL CERT CATEGORY 1	1 EACH	ONE PER FORM 406	FORM 406			MANDATORY SUBMITTAL OF DOCUMENTATION FOR EACH HEAT #

MATERIAL/ MATERIAL CODE	TESTS	SAMPLE SIZE	SAMPLE/TEST FREQUENCY	FIELD	DISTRICT/ AREA LAB	MDT HQ LAB	NOTES
WIRE ROPE 705.01.01.02	CERT/ VISUAL INSPECTION	1 EACH	ONE PER EACH	DATA SHEET VISUAL			
	STEEL CERT CATEGORY 2	1 EACH	ONE PER FORM 406	FORM 406			MANDATORY SUBMITTAL OF DOCUMENTATION PER SPECIFICATION 106.09

MATERIAL/ MATERIAL CODE	TESTS	SAMPLE SIZE	SAMPLE/TEST FREQUENCY	FIELD	DISTRICT/ AREA LAB	MDT HQ LAB	NOTES
STEEL BEAM GUARDRAIL 705.01.01.03	CERT/ VISUAL INSPECTION	1 EACH	ONE PER EACH	DATA SHEET VISUAL			
	STEEL CERT CATEGORY 1	1 EACH	ONE PER FORM 406	FORM 406			MANDATORY SUBMITTAL OF DOCUMENTATION FOR EACH HEAT #

MATERIAL/ MATERIAL CODE	TESTS	SAMPLE SIZE	SAMPLE/TEST FREQUENCY	FIELD	DISTRICT/ AREA LAB	MDT HQ LAB	NOTES
MISCELLANEOUS GUARDRAIL 705.01.01.05	CERT/ VISUAL INSPECTION	1 EACH	ONE PER ITEM	DATA SHEET			
	STEEL CERT CATEGORY 2	1 EACH	ONE PER FORM 406	FORM 406			MANDATORY SUBMITTAL OF DOCUMENTATION PER SPECIFICATION 106.09

MATERIAL/ MATERIAL CODE	TESTS	SAMPLE SIZE	SAMPLE/TEST FREQUENCY	FIELD	DISTRICT/ AREA LAB	MDT HQ LAB	NOTES
WOOD GUARDRAIL POST/BLOCKOUTS 705.01.02.01	CERT/ VISUAL INSPECTION	N/A	ONE PER LOT OR BATCH	VISUAL			VERIFY SEAL NUMBERS CORRESPOND WITH PRE-INSPECTION RECORDS
	MT 404 INSPECTING WOOD PRODUCTS	20 BORINGS	ONE PER CHARGE		PRE-INSPECTION		

MATERIAL/ MATERIAL CODE	TESTS	SAMPLE SIZE	SAMPLE/TEST FREQUENCY	FIELD	DISTRICT/ AREA LAB	MDT HQ LAB	NOTES
NON-WOOD BLOCKOUTS 705.01.02.02	CERT/ VISUAL INSPECTION	1 EACH	ONE PER LOT OR BATCH	CERT OF COMP VISUAL			

MATERIAL/ MATERIAL CODE	TESTS	SAMPLE SIZE	SAMPLE/TEST FREQUENCY	FIELD	DISTRICT/ AREA LAB	MDT HQ LAB	NOTES
STEEL GUARDRAIL POST 705.01.05.01	CERT/ VISUAL INSPECTION	1 EACH	ONE PER EACH	CERT OF COMP VISUAL			
	STEEL CERT CATEGORY 2	1 EACH	ONE PER FORM 406	FORM 406			MANDATORY SUBMITTAL OF DOCUMENTATION PER SPECIFICATION 106.09

MATERIAL/ MATERIAL CODE	TESTS	SAMPLE SIZE	SAMPLE/TEST FREQUENCY	FIELD	DISTRICT/ AREA LAB	MDT HQ LAB	NOTES
MASH W-BEAM TERMINAL SECTION 606.02.00.01	CERT/ VISUAL INSPECTION	1 EACH	ONE PER PROJECT	DATA SHEET			ACCEPTANCE ONLY FROM THE QUALIFIED PRODUCTS LIST

MATERIAL/ MATERIAL CODE	TESTS	SAMPLE SIZE	SAMPLE/TEST FREQUENCY	FIELD	DISTRICT/ AREA LAB	MDT HQ LAB	NOTES
CERT OF COMP FOR GUARDRAIL ITEMS 606.03.00.01	CERT/ VISUAL INSPECTION	1 EACH	ONE PER PROJECT	MDT-CON-606_03			

MATERIAL/ MATERIAL CODE	TESTS	SAMPLE SIZE	SAMPLE/TEST FREQUENCY	FIELD	DISTRICT/ AREA LAB	MDT HQ LAB	NOTES
EXPANSION JOINT FILLERS - CORK 707.01.01.01	CERT/ VISUAL INSPECTION	1 EACH	ONE PER PRODUCT	DATA SHEET			ACCEPTANCE ONLY FROM THE QUALIFIED PRODUCTS LIST

MATERIAL/ MATERIAL CODE	TESTS	SAMPLE SIZE	SAMPLE/TEST FREQUENCY	FIELD	DISTRICT/ AREA LAB	MDT HQ LAB	NOTES
JOINT SEALING MATERIAL 707.01.01.02	CERT/ VISUAL INSPECTION	1 EACH	ONE PER PRODUCT	DATA SHEET			ACCEPTANCE ONLY FROM THE QUALIFIED PRODUCTS LIST

MATERIAL/ MATERIAL CODE	TESTS	SAMPLE SIZE	SAMPLE/TEST FREQUENCY	FIELD	DISTRICT/ AREA LAB	MDT HQ LAB	NOTES
SILICONE JOINT SEAL 707.01.02.02	CERT/ VISUAL INSPECTION	1 EACH	ONE PER PRODUCT	DATA SHEET			

MATERIAL/ MATERIAL CODE	TESTS	SAMPLE SIZE	SAMPLE/TEST FREQUENCY	FIELD	DISTRICT/ AREA LAB	MDT HQ LAB	NOTES
FABRIC REINFORCED NEOPRENE JOINT SEAL 707.01.02.03	CERT/ VISUAL INSPECTION	1 EACH	ONE PER PRODUCT	DATA SHEET			

MATERIAL/ MATERIAL CODE	TESTS	SAMPLE SIZE	SAMPLE/TEST FREQUENCY	FIELD	DISTRICT/ AREA LAB	MDT HQ LAB	NOTES
EXPANSION JOINT SYSTEM 707.01.02.04	CERT/ VISUAL INSPECTION	1 EACH	ONE PER PRODUCT	DATA SHEET OR CERT OF COMP			IF WELDING OCCURS, CERTIFICATE OF COMPLIANCE IS SUBMITTAL OF DOCUMENTATION PER SPECIFICATION 624.03.3
	STEEL CERT CATEGORY 2	1 EACH	ONE PER FORM 406	FORM 406			MANDATORY SUBMITTAL OF DOCUMENTATION PER SPECIFICATION 106.09

MATERIAL/ MATERIAL CODE	TESTS	SAMPLE SIZE	SAMPLE/TEST FREQUENCY	FIELD	DISTRICT/ AREA LAB	MDT HQ LAB	NOTES
EXPANSION JOINT ASPHALT PLUG 707.01.02.05	CERT/ VISUAL INSPECTION	1 EACH	ONE PER PRODUCT	DATA SHEET			

MATERIAL/ MATERIAL CODE	TESTS	SAMPLE SIZE	SAMPLE/TEST FREQUENCY	FIELD	DISTRICT/ AREA LAB	MDT HQ LAB	NOTES
PREFORMED EXPANSION JOINT FILLER 707.01.03.01	CERT/ VISUAL INSPECTION	1 EACH	ONE PER PRODUCT	DATA SHEET			

MATERIAL/ MATERIAL CODE	TESTS	SAMPLE SIZE	SAMPLE/TEST FREQUENCY	FIELD	DISTRICT/ AREA LAB	MDT HQ LAB	NOTES
GASKET 707.02.01.01	CERT/ VISUAL INSPECTION	1 EACH	ONE PER PRODUCT	DATA SHEET			

MATERIAL/ MATERIAL CODE	TESTS	SAMPLE SIZE	SAMPLE/TEST FREQUENCY	FIELD	DISTRICT/ AREA LAB	MDT HQ LAB	NOTES
FLEXIBLE JOINT SEALER 707.02.02.01	CERT/ VISUAL INSPECTION	1 EACH	ONE PER PRODUCT	DATA SHEET			

LIGHTING, SIGNALS & COMMUNICATION

SPECIALS, SUPPLEMENTAL AND STANDARD SPECS, DETAILED DWGS

MATERIAL/ MATERIAL CODE	TESTS	SAMPLE SIZE	SAMPLE/TEST FREQUENCY	FIELD	DISTRICT/ AREA LAB	MDT HQ LAB	NOTES
VARIABLE MESSAGE SIGN	ELECTRICAL ITEM CHECKLIST	1 EACH	ONE PER ITEM	DATA SHEET VISUAL			VERIFY ITEM SUPPLIED MATCHES APPROVED SUBMITTAL

MATERIAL/ MATERIAL CODE	TESTS	SAMPLE SIZE	SAMPLE/TEST FREQUENCY	FIELD	DISTRICT/ AREA LAB	MDT HQ LAB	NOTES
ANTENNA	ELECTRICAL ITEM CHECKLIST	1 EACH	ONE PER ITEM	DATA SHEET			VERIFY ITEM SUPPLIED MATCHES APPROVED SUBMITTAL

MATERIAL/ MATERIAL CODE	TESTS	SAMPLE SIZE	SAMPLE/TEST FREQUENCY	FIELD	DISTRICT/ AREA LAB	MDT HQ LAB	NOTES
ELECTRICAL SUBMITTAL 703.01.00.01	ELECTRICAL ITEM CHECKLIST	1 EACH	ONE PER PROJECT	DATA SHEET			SEE INDIVIDUAL MATERIALS FOR STEEL REQUIREMENTS

MATERIAL/ MATERIAL CODE	TESTS	SAMPLE SIZE	SAMPLE/TEST FREQUENCY	FIELD	DISTRICT/ AREA LAB	MDT HQ LAB	NOTES
PVC CONDUIT	ELECTRICAL ITEM CHECKLIST	1 EACH	ONE PER SIZE	DATA SHEET			QUALIFIED PRODUCTS LIST VERIFY ITEM SUPPLIED MATCHES APPROVED SUBMITTAL

MATERIAL/ MATERIAL CODE	TESTS	SAMPLE SIZE	SAMPLE/TEST FREQUENCY	FIELD	DISTRICT/ AREA LAB	MDT HQ LAB	NOTES
HDPE CONDUIT	ELECTRICAL ITEM CHECKLIST	1 EACH	ONE PER SIZE	DATA SHEET			QUALIFIED PRODUCTS LIST VERIFY ITEM SUPPLIED MATCHES APPROVED SUBMITTAL

MATERIAL/ MATERIAL CODE	TESTS	SAMPLE SIZE	SAMPLE/TEST FREQUENCY	FIELD	DISTRICT/ AREA LAB	MDT HQ LAB	NOTES
STEEL CONDUIT	ELECTRICAL ITEM CHECKLIST	N/A	ONE PER LOT	VISUAL			QUALIFIED PRODUCTS LIST VERIFY ITEM SUPPLIED MATCHES APPROVED SUBMITTAL
	STEEL CERT CATEGORY 2	1 EACH	ONE PER FORM 406	FORM 406			MANDATORY SUBMITTAL OF DOCUMENTATION PER SPECIFICATION 106.09

MATERIAL/ MATERIAL CODE	TESTS	SAMPLE SIZE	SAMPLE/TEST FREQUENCY	FIELD	DISTRICT/ AREA LAB	MDT HQ LAB	NOTES
PULL BOXES	ELECTRICAL ITEM CHECKLIST	1 EACH	ONE PER LOT/BATCH	DATA SHEET			VERIFY ITEM SUPPLIED MATCHES APPROVED SUBMITTAL
	STEEL CERT CATEGORY 2	1 EACH	ONE PER FORM 406	FORM 406			MANDATORY SUBMITTAL OF DOCUMENTATION PER SPECIFICATION 106.09

MATERIAL/ MATERIAL CODE	TESTS	SAMPLE SIZE	SAMPLE/TEST FREQUENCY	FIELD	DISTRICT/ AREA LAB	MDT HQ LAB	NOTES
SIGNAL STANDARDS TYPE 2/3	ELECTRICAL ITEM CHECKLIST	1 EACH	ONE PER ITEM/LOT	DATA SHEET			VERIFY ITEM SUPPLIED MATCHES APPROVED SUBMITTAL
	STEEL CERT CATEGORY 2	1 EACH	ONE PER FORM 406	FORM 406			MANDATORY SUBMITTAL OF DOCUMENTATION PER SPECIFICATION 106.09 NO CERTIFICATION IS REQUIRED IF THIS ITEM IS SUPPLIED BY MDT

MATERIAL/ MATERIAL CODE	TESTS	SAMPLE SIZE	SAMPLE/TEST FREQUENCY	FIELD	DISTRICT/ AREA LAB	MDT HQ LAB	NOTES
LUMINAIRE STANDARD TYPE 10	ELECTRICAL ITEM CHECKLIST	1 EACH	ONE PER ITEM/LOT	DATA SHEET			VERIFY ITEM SUPPLIED MATCHES APPROVED SUBMITTAL
	STEEL CERT CATEGORY 2	1 EACH	ONE PER FORM 406	FORM 406			MANDATORY SUBMITTAL OF DOCUMENTATION PER SPECIFICATION 106.09 NO CERTIFICATION IS REQUIRED IF THIS ITEM IS SUPPLIED BY MDT

MATERIAL/ MATERIAL CODE	TESTS	SAMPLE SIZE	SAMPLE/TEST FREQUENCY	FIELD	DISTRICT/ AREA LAB	MDT HQ LAB	NOTES
SIGNAL STANDARDS TYPE 1	ELECTRICAL ITEM CHECKLIST	1 EACH	ONE PER ITEM/LOT	DATA SHEET			VERIFY ITEM SUPPLIED MATCHES APPROVED SUBMITTAL
	STEEL CERT CATEGORY 2	1 EACH	ONE PER FORM 406	FORM 406			MANDATORY SUBMITTAL OF DOCUMENTATION PER SPECIFICATION 106.09 NO CERTIFICATION IS REQUIRED IF THIS ITEM IS SUPPLIED BY MDT

LIGHTING, SIGNALS & COMMUNICATION

SPECIALS, SUPPLEMENTAL AND STANDARD SPECS, DETAILED DWGS

MATERIAL/ MATERIAL CODE	TESTS	SAMPLE SIZE	SAMPLE/TEST FREQUENCY	FIELD	DISTRICT/ AREA LAB	MDT HQ LAB	NOTES
CONDUCTOR	ELECTRICAL ITEM CHECKLIST	1 EACH	ONE PER LOT	DATA SHEET			VERIFY ITEM SUPPLIED MATCHES APPROVED SUBMITTAL

MATERIAL/ MATERIAL CODE	TESTS	SAMPLE SIZE	SAMPLE/TEST FREQUENCY	FIELD	DISTRICT/ AREA LAB	MDT HQ LAB	NOTES
CABLE	ELECTRICAL ITEM CHECKLIST	1 EACH	ONE PER LOT	DATA SHEET			VERIFY ITEM SUPPLIED MATCHES APPROVED SUBMITTAL

MATERIAL/ MATERIAL CODE	TESTS	SAMPLE SIZE	SAMPLE/TEST FREQUENCY	FIELD	DISTRICT/ AREA LAB	MDT HQ LAB	NOTES
SERVICE & CONTROL ASSEMBLY	ELECTRICAL ITEM CHECKLIST	1 EACH	ONE PER ITEM	DATA SHEET			VERIFY ITEM SUPPLIED MATCHES APPROVED SUBMITTAL

MATERIAL/ MATERIAL CODE	TESTS	SAMPLE SIZE	SAMPLE/TEST FREQUENCY	FIELD	DISTRICT/ AREA LAB	MDT HQ LAB	NOTES
TRAFFIC SIGNAL CABINET	ELECTRICAL ITEM CHECKLIST	1 EACH	ONE PER ITEM	DATA SHEET			VERIFY ITEM SUPPLIED MATCHES APPROVED SUBMITTAL

MATERIAL/ MATERIAL CODE	TESTS	SAMPLE SIZE	SAMPLE/TEST FREQUENCY	FIELD	DISTRICT/ AREA LAB	MDT HQ LAB	NOTES
TRAFFIC SIGNAL INDICATION	ELECTRICAL ITEM CHECKLIST	1 EACH	ONE PER ITEM	DATA SHEET			QUALIFIED PRODUCTS LIST VERIFY ITEM SUPPLIED MATCHES APPROVED SUBMITTAL

MATERIAL/ MATERIAL CODE	TESTS	SAMPLE SIZE	SAMPLE/TEST FREQUENCY	FIELD	DISTRICT/ AREA LAB	MDT HQ LAB	NOTES
LED TRAFFIC SIGNAL	ELECTRICAL ITEM CHECKLIST	1 EACH	ONE PER ITEM	DATA SHEET			QUALIFIED PRODUCTS LIST VERIFY ITEM SUPPLIED MATCHES APPROVED SUBMITTAL

MATERIAL/ MATERIAL CODE	TESTS	SAMPLE SIZE	SAMPLE/TEST FREQUENCY	FIELD	DISTRICT/ AREA LAB	MDT HQ LAB	NOTES
PEDESTRIAN SIGNAL INDICATION	ELECTRICAL ITEM CHECKLIST	1 EACH	ONE PER ITEM	DATA SHEET			QUALIFIED PRODUCTS LIST VERIFY ITEM SUPPLIED MATCHES APPROVED SUBMITTAL

LIGHTING, SIGNALS & COMMUNICATION

SPECIALS, SUPPLEMENTAL AND STANDARD SPECS, DETAILED DWGS

MATERIAL/ MATERIAL CODE	TESTS	SAMPLE SIZE	SAMPLE/TEST FREQUENCY	FIELD	DISTRICT/ AREA LAB	MDT HQ LAB	NOTES
DETECTOR LOOP	ELECTRICAL ITEM CHECKLIST	1 EACH	ONE PER ITEM	DATA SHEET			VERIFY ITEM SUPPLIED MATCHES APPROVED SUBMITTAL

MATERIAL/ MATERIAL CODE	TESTS	SAMPLE SIZE	SAMPLE/TEST FREQUENCY	FIELD	DISTRICT/ AREA LAB	MDT HQ LAB	NOTES
PEDESTRIAN PUSH BUTTONS	ELECTRICAL ITEM CHECKLIST	1 EACH	ONE PER ITEM	DATA SHEET			VERIFY ITEM SUPPLIED MATCHES APPROVED SUBMITTAL

MATERIAL/ MATERIAL CODE	TESTS	SAMPLE SIZE	SAMPLE/TEST FREQUENCY	FIELD	DISTRICT/ AREA LAB	MDT HQ LAB	NOTES
LUMINAIRE ASSEMBLY	ELECTRICAL ITEM CHECKLIST	1 EACH	ONE PER ITEM	DATA SHEET			VERIFY ITEM SUPPLIED MATCHES APPROVED SUBMITTAL

MATERIAL/ MATERIAL CODE	TESTS	SAMPLE SIZE	SAMPLE/TEST FREQUENCY	FIELD	DISTRICT/ AREA LAB	MDT HQ LAB	NOTES
EMERGENCY VEHICLE PREEMPTION	ELECTRICAL ITEM CHECKLIST	1 EACH	ONE PER ITEM	DATA SHEET			VERIFY ITEM SUPPLIED MATCHES APPROVED SUBMITTAL

MATERIAL/ MATERIAL CODE	TESTS	SAMPLE SIZE	SAMPLE/TEST FREQUENCY	FIELD	DISTRICT/ AREA LAB	MDT HQ LAB	NOTES
CLASS 4 TREATED WOOD POLES 703.16.00.01	CERT/ VISUAL INSPECTION	N/A	ONE PER CHARGE	VISUAL			VERIFY SEAL NUMBERS CORRESPOND WITH PRE-INSPECTION RECORDS
	MT 404 INSPECTING WOOD PRODUCTS	20 BORINGS	ONE PER CHARGE		PRE-INSPECTION		

MATERIAL/ MATERIAL CODE	TESTS	SAMPLE SIZE	SAMPLE/TEST FREQUENCY	FIELD	DISTRICT/ AREA LAB	MDT HQ LAB	NOTES
GUYS & ANCHORS	ELECTRICAL ITEM CHECKLIST	1 EACH	ONE PER ITEM	DATA SHEET			VERIFY ITEM SUPPLIED MATCHES APPROVED SUBMITTAL

MATERIAL/ MATERIAL CODE	TESTS	SAMPLE SIZE	SAMPLE/TEST FREQUENCY	FIELD MAINT	DISTRICT/ AREA LAB	MDT HQ LAB	NOTES
8A-R SALT (MAINTENANCE) MT 1	CERT/ VISUAL INSPECTION	N/A	ONE PER TRUCK LOAD	VISUAL DATA SHEET			VISUALLY EVALUATE FOR CONTAMINATION
	MT 526 MOISTURE OF PNS SALT	AIR TIGHT CONTAINER (1 GAL SEALABLE BAG)	ONE PER TRUCK LOAD - TEST EACH SAMPLE - EXCEPT MISSOULA AND KALISPELL TEST EACH 5TH SAMPLE - IN CASE OF A FAILURE, TEST EACH SAMPLE	SAMPLE	TEST		TESTING OF MOISTURE CONTENT

MATERIAL/ MATERIAL CODE	TESTS	SAMPLE SIZE	SAMPLE/TEST FREQUENCY	FIELD MAINT	DISTRICT/ AREA LAB	MDT HQ LAB	NOTES
8A-B SALT (MAINTENANCE) MT 3	CERT/ VISUAL INSPECTION	AIR TIGHT CONTAINER (1 GAL SEALABLE BAG)	ONE PER TRUCK LOAD	VISUAL DATA SHEET			VISUALLY EVALUATE FOR CONTAMINATION
	*PNS METHOD 13 SALT GRADATION		TEST EACH SAMPLE	SAMPLE	TEST		*GRADATION - MUST BE HAND SHAKEN
	MT 526 MOISTURE OF PNS SALT						TESTING OF MOISTURE CONTENT

MATERIAL/ MATERIAL CODE	TESTS	SAMPLE SIZE	SAMPLE/TEST FREQUENCY	FIELD MAINT	DISTRICT/ AREA LAB	MDT HQ LAB	NOTES
8B SALT (MAINTENANCE) MT 10	CERT/ VISUAL INSPECTION	AIR TIGHT CONTAINER (1 GAL SEALABLE BAG)	ONE PER TRUCK LOAD	VISUAL DATA SHEET			VISUALLY EVALUATE FOR CONTAMINATION
	MT 526 MOISTURE OF PNS SALT		ONE PER TRUCK LOAD - TEST EACH SAMPLE - EXCEPT MISSOULA AND KALISPELL TEST EACH 5TH SAMPLE IN CASE OF A FAILURE, TEST EACH SAMPLE	SAMPLE			TESTING OF MOISTURE CONTENT

MATERIAL/ MATERIAL CODE	TESTS	SAMPLE SIZE	SAMPLE/TEST FREQUENCY	FIELD MAINT	DISTRICT/ AREA LAB	MDT HQ LAB	NOTES
SALT BRINE - NaCl (MAINTENANCE) MT 2	MT 501 pH INSOLUBLE MTRL C.R. TOTAL SETTLEABLE SOLIDS PERCENT PASSING #10 SIEVE	1 GALLON (4 LITERS)	ONE SAMPLE FOR EVERY 100,000 GALLONS	SAMPLE		TEST	C.R. = CORROSION RATE
	MT 502 CHEMICAL ANALYSIS						
	MT 504 CYANIDE						

MATERIAL/ MATERIAL CODE	TESTS	SAMPLE SIZE	SAMPLE/TEST FREQUENCY	FIELD MAINT	DISTRICT/ AREA LAB	MDT HQ LAB	NOTES
CORROSION INHIBITOR (MAINTENANCE) MT 6	CERT/ VISUAL INSPECTION	1 EACH	ONE PER TRUCK LOAD	DATA SHEET			
	MT 408 SAMPLING LIQUID DEICING MATERIAL	1 GALLON	ONE SAMPLE FOR EVERY 100,000 GALLONS	SAMPLE			
	MT 501 pH INSOLUBLE MTRL C.R. TOTAL SETTLEABLE SOLIDS PERCENT PASSING #10 SIEVE					TEST	C.R. = CORROSION RATE
	MT 502 CHEMICAL ANALYSIS						
	MT 504 CYANIDE						

MATERIAL/ MATERIAL CODE	TESTS	SAMPLE SIZE	SAMPLE/TEST FREQUENCY	FIELD MAINT	DISTRICT/ AREA LAB	MDT HQ LAB	NOTES
DE-ICER $MgCl_2$ (MAINTENANCE) MT 7	CERT/ VISUAL INSPECTION	1 EACH	ONE PER TRUCK LOAD	DATA SHEET			
	MT 408 SAMPLING LIQUID DEICING MATERIAL	1 GALLON	ONE SAMPLE FOR EVERY 100,000 GALLONS	SAMPLE			
	MT 501 pH INSOLUBLE MTRL C.R. TOTAL SETTLEABLE SOLIDS PERCENT PASSING #10 SIEVE					TEST	C.R. = CORROSION RATE
	MT 502 CHEMICAL ANALYSIS						
	MT 504 CYANIDE						

MATERIAL/ MATERIAL CODE	TESTS	SAMPLE SIZE	SAMPLE/TEST FREQUENCY	FIELD MAINT	DISTRICT/ AREA LAB	MDT HQ LAB	NOTES
DE-ICER $CaCl_2$ (MAINTENANCE) MT 8	CERT/ VISUAL INSPECTION	1 EACH	ONE PER TRUCK LOAD	DATA SHEET			
	MT 408 SAMPLING LIQUID DEICING MATERIAL	1 GALLON	ONE SAMPLE FOR EVERY 100,000 GALLONS	SAMPLE			
	MT 501 pH INSOLUBLE MTRL C.R. TOTAL SETTLEABLE SOLIDS PERCENT PASSING #10 SIEVE					TEST	C.R. = CORROSION RATE
	MT 502 CHEMICAL ANALYSIS						
	MT 504 CYANIDE						

MATERIAL/ MATERIAL CODE	TESTS	SAMPLE SIZE	SAMPLE/TEST FREQUENCY	FIELD MAINT	DISTRICT/ AREA LAB	MDT HQ LAB	NOTES
SANDING MATERIAL MT 4	CERT/ VISUAL INSPECTION	1 EACH		DATA SHEET			
	MT 201 SAMPLING	30 LBS	ONE PER 2,000 TONS	SAMPLE			
	MT 202 SIEVE ANALYSIS				TEST		
	MT 203 UNIT WEIGHT						

MATERIAL/ MATERIAL CODE	TESTS	SAMPLE SIZE	SAMPLE/TEST FREQUENCY	FIELD MAINT	DISTRICT/ AREA LAB	MDT HQ LAB	NOTES
COLD MIX ASPHALT PATCHING MATERIAL MT 9	CERT/ VISUAL INSPECTION	1 EACH	ONE PER CONTRACT	DATA SHEET			
	MT 217 FRACTURE	30 LBS		SAMPLE	TEST		
	MT 322 PERCENT ADHESION					TEST	

MATERIAL/ MATERIAL CODE	TESTS	SAMPLE SIZE	SAMPLE/TEST FREQUENCY	FIELD MAINT	DISTRICT/ AREA LAB	MDT HQ LAB	NOTES
ENGINE OIL ANALYSIS MT 5	CERT/ VISUAL INSPECTION	1 EACH		DATA SHEET			
	MT 520 ENGINE OIL ANALYSIS	50 mL	YEARLY/AS NEEDED	SAMPLE		TEST	

MATERIAL/ MATERIAL CODE	TESTS	SAMPLE SIZE	SAMPLE/TEST FREQUENCY	FIELD	DISTRICT/ AREA LAB	MDT HQ LAB	NOTES
QUICK LIME 405.01.01.01	CERT/ VISUAL INSPECTION	1 EACH	ONE PER LOT OR BATCH	DATA SHEET			SEE SPECIAL PROVISIONS 713.1
	AASHTO T 27 SIEVE ANALYSIS	5 LBS (3 KG)	ONE TEST PER PROJECT	SAMPLE		TEST	
	ASTM C25 CHEMICAL ANALYSIS	50 GRAM (2 OZ) AIRTIGHT	ONE TEST PER PROJECT			TEST	

MATERIAL/ MATERIAL CODE	TESTS	SAMPLE SIZE	SAMPLE/TEST FREQUENCY	FIELD	DISTRICT/ AREA LAB	MDT HQ LAB	NOTES
DETECTABLE WARNING DEVICES 608.03.02.01	CERT/ VISUAL INSPECTION	1 EACH	ONE PER PRODUCT	DATA SHEET			ACCEPTANCE ONLY FROM THE QUALIFIED PRODUCTS LIST
	STEEL CERT CATEGORY 2	1 EACH	ONE PER FORM 406	FORM 406			MANDATORY SUBMITTAL OF DOCUMENTATION PER SPECIFICATION 106.09

MATERIAL/ MATERIAL CODE	TESTS	SAMPLE SIZE	SAMPLE/TEST FREQUENCY	FIELD	DISTRICT/ AREA LAB	MDT HQ LAB	NOTES
CATTLE GUARD (GRATE) 611.02.04.01	CERT/ VISUAL INSPECTION	1 EACH	ONE PER PRODUCT	CERT OF COMP			IF WELDING OCCURS, CERTIFICATE OF COMPLIANCE IS SUBMITTAL OF DOCUMENTATION PER SPECIFICATION 624.03.3
	STEEL CERT CATEGORY 2	1 EACH	ONE PER FORM 406	FORM 406			MANDATORY SUBMITTAL OF DOCUMENTATION PER SPECIFICATION 106.09

MATERIAL/ MATERIAL CODE	TESTS	SAMPLE SIZE	SAMPLE/TEST FREQUENCY	FIELD	DISTRICT/ AREA LAB	MDT HQ LAB	NOTES
CONCRETE FILLED BAG/SCRIM BAG 613.03.05.01	CERT/ VISUAL INSPECTION	1 EACH	ONE PER PRODUCT	DATA SHEET			

MATERIAL/ MATERIAL CODE	TESTS	SAMPLE SIZE	SAMPLE/TEST FREQUENCY	FIELD	DISTRICT/ AREA LAB	MDT HQ LAB	NOTES
MAIL BOX 623.02.00.01	CERT/ VISUAL INSPECTION	1 EACH	ONE PER PRODUCT	DATA SHEET			ACCEPTANCE ONLY FROM THE QUALIFIED PRODUCTS LIST MAILBOX PACKAGING/DATA SHEET MUST DISPLAY "MADE IN THE USA" MAILBOX CLUSTERS ARE NOT REQUIRED TO BE ON THE QUALIFIED PRODUCTS LIST

MATERIAL/ MATERIAL CODE	TESTS	SAMPLE SIZE	SAMPLE/TEST FREQUENCY	FIELD	DISTRICT/ AREA LAB	MDT HQ LAB	NOTES
STRUCTURAL TIMBER 706.01.00.01	CERT/ VISUAL INSPECTION	N/A	ONE PER CHARGE	VISUAL			VERIFY SEAL NUMBERS CORRESPOND WITH PRE-INSPECTION RECORDS
	MT 404 INSPECTING WOOD PRODUCTS	20 BORINGS	ONE PER CHARGE		PRE-INSPECTION		

MATERIAL/ MATERIAL CODE	TESTS	SAMPLE SIZE	SAMPLE/TEST FREQUENCY	FIELD	DISTRICT/ AREA LAB	MDT HQ LAB	NOTES
MISCELLANEOUS PAINT 710.02.00.01	CERT/ VISUAL INSPECTION	1 EACH	ONE PER LOT OR BATCH	DATA SHEET			SUBMIT CERT OF COMP WHEN REQUIRED PER SPECIFICATION 710.02 CATTLE GUARDS REQUIRE VISUAL INSPECTION ONLY

MATERIAL/ MATERIAL CODE	TESTS	SAMPLE SIZE	SAMPLE/TEST FREQUENCY	FIELD	DISTRICT/ AREA LAB	MDT HQ LAB	NOTES
ALUMINUM EPOXY 710.02.00.02	CERT/ VISUAL INSPECTION	1 EACH	ONE PER LOT OR BATCH	DATA SHEET			SUBMIT CERT OF COMP WHEN REQUIRED PER SPECIFICATION 710.02

MATERIAL/ MATERIAL CODE	TESTS	SAMPLE SIZE	SAMPLE/TEST FREQUENCY	FIELD	DISTRICT/ AREA LAB	MDT HQ LAB	NOTES
PIPE PILE EPOXY 710.02.00.03	CERT/ VISUAL INSPECTION	1 EACH	ONE PER LOT OR BATCH	DATA SHEET			SUBMIT CERT OF COMP WHEN REQUIRED PER SPECIFICATION 710.02

MATERIAL/ MATERIAL CODE	TESTS	SAMPLE SIZE	SAMPLE/TEST FREQUENCY	FIELD	DISTRICT/ AREA LAB	MDT HQ LAB	NOTES
ZINC RICH PRIMER 710.02.03.01	CERT/ VISUAL INSPECTION	1 EACH	ONE PER LOT OR BATCH	DATA SHEET			SUBMIT CERT OF COMP WHEN REQUIRED PER SPECIFICATION 710.02

MATERIAL/ MATERIAL CODE	TESTS	SAMPLE SIZE	SAMPLE/TEST FREQUENCY	FIELD	DISTRICT/ AREA LAB	MDT HQ LAB	NOTES
POWDER COATING 710.03.00.01	CERT/ VISUAL INSPECTION	1 EACH	ONE PER LOT OR BATCH	CERT OF COMP			

MATERIAL/ MATERIAL CODE	TESTS	SAMPLE SIZE	SAMPLE/TEST FREQUENCY	FIELD	DISTRICT/ AREA LAB	MDT HQ LAB	NOTES
ANTI-GRAFFITI COATING 710.04.00.01	CERT/ VISUAL INSPECTION	1 EACH	ONE PER PRODUCT	DATA SHEET			ACCEPTANCE ONLY FROM THE QUALIFIED PRODUCTS LIST

MATERIAL/ MATERIAL CODE	TESTS	SAMPLE SIZE	SAMPLE/TEST FREQUENCY	FIELD	DISTRICT/ AREA LAB	MDT HQ LAB	NOTES
MISCELLANEOUS MATERIAL ACCEPTED ON CERT 713.00.00.00	CERT/ VISUAL INSPECTION	1 EACH	ONE PER SOURCE	CERT OF COMP OR DATA SHEET			CERTIFICATION OF COMPLIANCE IF REQUIRED BY CONTRACT PROVISIONS

MATERIAL/ MATERIAL CODE	TESTS	SAMPLE SIZE	SAMPLE/TEST FREQUENCY	FIELD	DISTRICT/ AREA LAB	MDT HQ LAB	NOTES
WATER FOR CONCRETE 713.01.00.01	CERT/ VISUAL INSPECTION	N/A	ONE PER SOURCE	VISUAL			
	AASHTO M 157	1 QT (1 LITER)	ONE PER SOURCE			TEST	SAMPLE REQUIRED ONLY IF NON-POTABLE SOURCE

MATERIAL/ MATERIAL CODE	TESTS	SAMPLE SIZE	SAMPLE/TEST FREQUENCY	FIELD	DISTRICT/ AREA LAB	MDT HQ LAB	NOTES
HYDRATED LIME 713.02.00.01	CERT/ VISUAL INSPECTION	1 EACH	ONE PER GRIND/BIN/SHIPMENT	DATA SHEET			QUALIFIED PRODUCTS LIST
	MT 201 SAMPLING	5 LBS (3 KG)	ONE PER PROJECT/ CONTRACT	SAMPLE			SAMPLE REQUIRED ONLY IF NOT ON THE QUALIFIED PRODUCTS LIST
	AASHTO M 303 LIME FOR ASPHALT MIXTURES					TEST	
	AASHTO T 219 CHEMCIAL ANALYSIS OF HYDRATED LIME	50 GRAM (2 OZ) AIRTIGHT				SAMPLE TEST	

MATERIAL/ MATERIAL CODE	TESTS	SAMPLE SIZE	SAMPLE/TEST FREQUENCY	FIELD	DISTRICT/ AREA LAB	MDT HQ LAB	NOTES
CALCIUM CHLORIDE 713.03.00.01	CERT/ VISUAL INSPECTION	1 EACH	ONE PER LOAD	DATA SHEET			QUALIFIED PRODUCTS LIST
	MT 502 CHEMICAL ANALYSIS	1 PINT (500 mL)	ONE PER PROJECT			SAMPLE TEST	SAMPLE REQUIRED ONLY IF NOT ON THE QUALIFIED PRODUCTS LIST

MATERIAL/ MATERIAL CODE	TESTS	SAMPLE SIZE	SAMPLE/TEST FREQUENCY	FIELD	DISTRICT/ AREA LAB	MDT HQ LAB	NOTES
MAGNESIUM CHLORIDE 713.03.00.02	CERT/ VISUAL INSPECTION	1 EACH	ONE PER LOAD	DATA SHEET			QUALIFIED PRODUCTS LIST
	MT 502 CHEMICAL ANALYSIS	1 PINT (500 mL)	ONE PER PROJECT			SAMPLE TEST	SAMPLE REQUIRED ONLY IF NOT ON THE QUALIFIED PRODUCTS LIST

MATERIAL/ MATERIAL CODE	TESTS	SAMPLE SIZE	SAMPLE/TEST FREQUENCY	FIELD	DISTRICT/ AREA LAB	MDT HQ LAB	NOTES
MORTAR SAND 713.04.01.01	CERT/ VISUAL INSPECTION	1 EACH	ONE PER PROJECT	DATA SHEET			CERTIFICATION IS THE GRADATION ON THE CONTAINER
	MT 202 SIEVE ANALYSIS	5 LBS (3 KG)	ONE PER SOURCE	SAMPLE TEST			REQUIRED WHEN PRODUCT IS NOT PREPACKAGED

MATERIAL/ MATERIAL CODE	TESTS	SAMPLE SIZE	SAMPLE/TEST FREQUENCY	FIELD	DISTRICT/ AREA LAB	MDT HQ LAB	NOTES
CEMENT GROUT 713.04.01.02	CERT/ VISUAL INSPECTION	1 EACH	ONE PER LOT OR BATCH	DATA SHEET			CERTIFICATION IS THE MIXTURE AND GRADATION ON THE CONTAINER
	AASHTO R 64 CUBE SPECIMENS USING GROUT/MORTAR	1 CU FT (0.03 M3)	TWO SETS OF THREE CUBES PER EACH DAYS POUR	SAMPLE			
	AASHTO T 106 COMPRESSIVE STRENGTH OF MORTARS					TEST	

MATERIAL/ MATERIAL CODE	TESTS	SAMPLE SIZE	SAMPLE/TEST FREQUENCY	FIELD	DISTRICT/ AREA LAB	MDT HQ LAB	NOTES
TOPSOIL 713.05.02.01	MT 412 TOP SOIL	5 LBS (3 KG)	ONE TEST PER SOURCE	SAMPLE TEST			TESTING REQUIRED ON IMPORTED TOPSOIL ONLY

MATERIAL/ MATERIAL CODE	TESTS	SAMPLE SIZE	SAMPLE/TEST FREQUENCY	FIELD	DISTRICT/ AREA LAB	MDT HQ LAB	NOTES
LANDSCAPE GRADE TOPSOIL 713.05.02.02	MT 412 TOP SOIL	5 LBS (3 KG)	ONE TEST PER SOURCE	SAMPLE TEST			TESTING REQUIRED ON IMPORTED TOPSOIL ONLY

MATERIAL/ MATERIAL CODE	TESTS	SAMPLE SIZE	SAMPLE/TEST FREQUENCY	FIELD	DISTRICT/ AREA LAB	MDT HQ LAB	NOTES
SEED 713.08.01.01	CERT/ VISUAL INSPECTION	1 EACH	ONE PER BLEND	DATA SHEET			CERTIFICATION IS AN APPROVED SEED BLEND REPORT
	MT 403 GRASS SEED	1 QT (1 LITER)	ONE PER BLEND		PRE-INSPECTION		PRE-INSPECTION NOT REQUIRED FOR BLENDS LESS THAN 10 LBS

MATERIAL/ MATERIAL CODE	TESTS	SAMPLE SIZE	SAMPLE/TEST FREQUENCY	FIELD	DISTRICT/ AREA LAB	MDT HQ LAB	NOTES
FERTILIZER 713.09.00.01	CERT/ VISUAL INSPECTION	1 EACH	ONE PER BLEND	DATA SHEET			MUST MEET MT FERTILIZING LAWS

MATERIAL/ MATERIAL CODE	TESTS	SAMPLE SIZE	SAMPLE/TEST FREQUENCY	FIELD	DISTRICT/ AREA LAB	MDT HQ LAB	NOTES
MULCH 713.10.01.01	CERT/ VISUAL INSPECTION	1 EACH	ONE PER BLEND	CERT OF COMP OR DATA SHEET			ACCEPTANCE ONLY FROM THE QUALIFIED PRODUCTS LIST CERTIFICATE OF COMPLIANCE IS REQUIRED FOR ALL MULCH THAT CONTAINS STRAW

MATERIAL/ MATERIAL CODE	TESTS	SAMPLE SIZE	SAMPLE/TEST FREQUENCY	FIELD	DISTRICT/ AREA LAB	MDT HQ LAB	NOTES
FABRICATED NETTING 713.10.03.01	CERT/ VISUAL INSPECTION	N/A	VISUAL INSPECTION ONLY	VISUAL			EPM'S DISCRETION

MATERIAL/ MATERIAL CODE	TESTS	SAMPLE SIZE	SAMPLE/TEST FREQUENCY	FIELD	DISTRICT/ AREA LAB	MDT HQ LAB	NOTES
SOD 713.11.00.01	CERT/ VISUAL INSPECTION	1 EACH	ONE PER SUPPLIER	DATA SHEET			

MATERIAL/ MATERIAL CODE	TESTS	SAMPLE SIZE	SAMPLE/TEST FREQUENCY	FIELD	DISTRICT/ AREA LAB	MDT HQ LAB	NOTES
COMPOST 713.13.01.01	CERT/ VISUAL INSPECTION	1 EACH	ONE PER SUPPLIER	CERT OF COMP OR DATA SHEET			ACCEPTANCE ONLY FROM THE QUALIFIED PRODUCTS LIST CERTIFICATE OF COMPLIANCE IS REQUIRED FOR ALL COMPOST THAT CONTAINS STRAW

MATERIAL/ MATERIAL CODE	TESTS	SAMPLE SIZE	SAMPLE/TEST FREQUENCY	FIELD	DISTRICT/ AREA LAB	MDT HQ LAB	NOTES
DYED DIESEL MCS 1	MT 521 TEST FOR RED DYE 164	3 - 125mL SAMPLES MINIMUM	MINIMUM ONE PER OFFICER PER QUARTER/AS NEEDED	MCS SAMPLE		TEST	

MATERIAL/ MATERIAL CODE	TESTS	SAMPLE SIZE	SAMPLE/TEST FREQUENCY	FIELD	DISTRICT/ AREA LAB	MDT HQ LAB	NOTES
TEMPORARY PAINT 714.03.00.02	CERT/ VISUAL INSPECTION	1 EACH	ONE PER LOT OR BATCH	DATA SHEET			ACCEPTANCE ONLY FROM THE QUALIFIED PRODUCTS LIST

MATERIAL/ MATERIAL CODE	TESTS	SAMPLE SIZE	SAMPLE/TEST FREQUENCY	FIELD	DISTRICT/ AREA LAB	MDT HQ LAB	NOTES
WATERBORNE PAINT 714.04.00.03	CERT/ VISUAL INSPECTION	1 EACH	ONE PER LOT OR BATCH	DATA SHEET			ACCEPTANCE ONLY FROM THE QUALIFIED PRODUCTS LIST

MATERIAL/ MATERIAL CODE	TESTS	SAMPLE SIZE	SAMPLE/TEST FREQUENCY	FIELD	DISTRICT/ AREA LAB	MDT HQ LAB	NOTES
HIGH DURABLE WATERBORNE PAINT 714.05.00.03	CERT/ VISUAL INSPECTION	1 EACH	ONE PER LOT OR BATCH	DATA SHEET			ACCEPTANCE ONLY FROM THE QUALIFIED PRODUCTS LIST

MATERIAL/ MATERIAL CODE	TESTS	SAMPLE SIZE	SAMPLE/TEST FREQUENCY	FIELD	DISTRICT/ AREA LAB	MDT HQ LAB	NOTES
EPOXY PAINT 714.06.00.02	CERT/ VISUAL INSPECTION	1 EACH	ONE PER LOT OR BATCH	DATA SHEET			ACCEPTANCE ONLY FROM THE QUALIFIED PRODUCTS LIST
	SPEC TABLE 714-4 EPOXY PAINT COMPOSITION	1 QT (1 LITER) OF EACH PIGMENT	AS REQUESTED	SAMPLE		TEST	ONE QUART (LITER) SAMPLE OF BOTH PIGMENT (COLOR) AND RESIN (CATALYST) WILL BE TAKEN FROM THE THOROUGHLY MIXED CONTENTS OF A STRIPING MACHINE

MATERIAL/ MATERIAL CODE	TESTS	SAMPLE SIZE	SAMPLE/TEST FREQUENCY	FIELD	DISTRICT/ AREA LAB	MDT HQ LAB	NOTES
PREFORMED PLASTIC 714.07.00.01	CERT/ VISUAL INSPECTION	1 EACH	ONE PER TYPE	DATA SHEET			
	ASTM D638 TENSILE PROPERTIES	4" X 1' (100 mm x 300 mm)	ONE PER TYPE	SAMPLE		TEST	

MATERIAL/ MATERIAL CODE	TESTS	SAMPLE SIZE	SAMPLE/TEST FREQUENCY	FIELD	DISTRICT/ AREA LAB	MDT HQ LAB	NOTES
REFLECTIVE GLASS BEADS MT TYPE 1 714.08.00.02 MT TYPE 2 714.08.00.03	CERT/ VISUAL INSPECTION	1 EACH	ONE PER LOT OR BATCH	DATA SHEET			ACCEPTANCE ONLY FROM THE QUALIFIED PRODUCTS LIST
	AASHTO T 346 SAMPLING GLASS BEADS	1 QT (1 LITER)	**CONSTRUCTION** ONE PER PROJECT **MAINTENANCE** AS REQUESTED	SAMPLE		TEST	SAMPLE FROM BULK CONTAINER WITH THIEF/PROBE IN ACCORDANCE WITH AASHTO T 346. SAMPLE THIEF/PROBE MAY NOT FILL SAMPLE BOTTLES. WHEN SAMPLING FROM A BULK CONTAINER IS NOT POSSIBLE, SAMPLES MAY BE COLLECTED FROM THE BEAD GUN ON THE TRUCK.
	AASHTO PP 74 GRADATION AND ROUNDNESS OF GLASS BEADS						

MATERIAL/ MATERIAL CODE	TESTS	SAMPLE SIZE	SAMPLE/TEST FREQUENCY	FIELD	DISTRICT/ AREA LAB	MDT HQ LAB	NOTES
PILE DRIVING POINT 559.04.06.01	CERT/ VISUAL INSPECTION	1 EACH	ONE PER PRODUCT	CERT OF COMP			IF WELDING OCCURS, CERTIFICATE OF COMPLIANCE IS SUBMITTAL OF DOCUMENTATION PER SPECIFICATION 624.03.3
	STEEL CERT CATEGORY 2	1 EACH	ONE PER FORM 406	FORM 406			MANDATORY SUBMITTAL OF DOCUMENTATION PER SPECIFICATION 106.09

MATERIAL/ MATERIAL CODE	TESTS	SAMPLE SIZE	SAMPLE/TEST FREQUENCY	FIELD	DISTRICT/ AREA LAB	MDT HQ LAB	NOTES
PILE CUTTING SHOE 559.04.06.02	CERT/ VISUAL INSPECTION	1 EACH	ONE PER PRODUCT	CERT OF COMP			IF WELDING OCCURS, CERTIFICATE OF COMPLIANCE IS SUBMITTAL OF DOCUMENTATION PER SPECIFICATION 624.03.3
	STEEL CERT CATEGORY 2	1 EACH	ONE PER FORM 406	FORM 406			MANDATORY SUBMITTAL OF DOCUMENTATION PER SPECIFICATION 106.09

MATERIAL/ MATERIAL CODE	TESTS	SAMPLE SIZE	SAMPLE/TEST FREQUENCY	FIELD	DISTRICT/ AREA LAB	MDT HQ LAB	NOTES
STRUCTURAL STEEL PILES 711.10.01.01A 711.10.01.01L	CERT/ VISUAL INSPECTION	1 EACH	ONE PER EACH	CERT OF COMP VISUAL			IF WELDING OCCURS, CERTIFICATE OF COMPLIANCE IS SUBMITTAL OF DOCUMENTATION PER SPECIFICATION 624.03.3
	STEEL CERT CATEGORY 1	1 EACH	ONE PER FORM 406	FORM 406			MANDATORY SUBMITTAL OF DOCUMENTATION FOR EACH HEAT # IF RECYCLED MATERIAL, BUY AMERICA CATEGORY 2 REQUIREMENTS APPLY
	STEEL CERT CATEGORY 2	1 EACH	ONE PER FORM 406	FORM 406			MANDATORY SUBMITTAL OF DOCUMENTATION PER SPECIFICATION 106.09

MATERIAL/ MATERIAL CODE	TESTS	SAMPLE SIZE	SAMPLE/TEST FREQUENCY	FIELD	DISTRICT/ AREA LAB	MDT HQ LAB	NOTES
STEEL PIPE PILES 711.10.02.01	CERT/ VISUAL INSPECTION	1 EACH	ONE PER EACH	CERT OF COMP VISUAL			IF WELDING OCCURS, CERTIFICATE OF COMPLIANCE IS SUBMITTAL OF DOCUMENTATION PER SPECIFICATION 624.03.3
	STEEL CERT CATEGORY 1	1 EACH	ONE PER FORM 406	FORM 406			MANDATORY SUBMITTAL OF DOCUMENTATION FOR EACH HEAT #

MATERIAL/ MATERIAL CODE	TESTS	SAMPLE SIZE	SAMPLE/TEST FREQUENCY	FIELD	DISTRICT/ AREA LAB	MDT HQ LAB	NOTES
STEEL FLUTED PILES 711.10.03.01	CERT/ VISUAL INSPECTION	1 EACH	ONE PER EACH	CERT OF COMP VISUAL			IF WELDING OCCURS, CERTIFICATE OF COMPLIANCE IS SUBMITTAL OF DOCUMENTATION PER SPECIFICATION 624.03.3
	STEEL CERT CATEGORY 1	1 EACH	ONE PER FORM 406	FORM 406			MANDATORY SUBMITTAL OF DOCUMENTATION FOR EACH HEAT #

MATERIAL/ MATERIAL CODE	TESTS	SAMPLE SIZE	SAMPLE/TEST FREQUENCY	FIELD	DISTRICT/ AREA LAB	MDT HQ LAB	NOTES
REINFORCED CONCRETE PIPE 708.01.01.01	CERT/ VISUAL INSPECTION	1 EACH	ONE PER PROJECT	VISUAL			PRE-INSPECTION IS NOT REQUIRED IF ITEM IS PRODUCED AT A CERTIFIED PLANT (QPL)
	STEEL CERT CATEGORY 2	1 EACH	ONE PER FORM 406	FORM 406			MANDATORY SUBMITTAL OF DOCUMENTATION PER SPECIFICATION 106.09
	MT 110 RCP AND ASSOCIATED ITEMS	N/A	MONTHLY		PRE-INSPECTION		PLANTS NEED TO BE INSPECTED MONTHLY, INCLUDING CERTIFIED PLANTS

MATERIAL/ MATERIAL CODE	TESTS	SAMPLE SIZE	SAMPLE/TEST FREQUENCY	FIELD	DISTRICT/ AREA LAB	MDT HQ LAB	NOTES
CONCRETE PRESSURE PIPE 708.02.00.01	CERT/ VISUAL INSPECTION	1 EACH	ONE PER PROJECT	VISUAL			PRE-INSPECTION IS NOT REQUIRED IF ITEM IS PRODUCED AT A CERTIFIED PLANT (QPL)
	STEEL CERT CATEGORY 2	1 EACH	ONE PER FORM 406	FORM 406			MANDATORY SUBMITTAL OF DOCUMENTATION PER SPECIFICATION 106.09
	MT 110 RCP AND ASSOCIATED ITEMS	N/A	MONTHLY		PRE-INSPECTION		PLANTS NEED TO BE INSPECTED MONTHLY, INCLUDING CERTIFIED PLANTS

MATERIAL/ MATERIAL CODE	TESTS	SAMPLE SIZE	SAMPLE/TEST FREQUENCY	FIELD	DISTRICT/ AREA LAB	MDT HQ LAB	NOTES
PLASTIC PIPE 708.05 708.06 708.07 708.08	CERT/ VISUAL INSPECTION	1 EACH	ONE PER LOT/BATCH	DATA SHEET			

MATERIAL/ MATERIAL CODE	TESTS	SAMPLE SIZE	SAMPLE/TEST FREQUENCY	FIELD	DISTRICT/ AREA LAB	MDT HQ LAB	NOTES
DUCTILE IRON WATER PIPE 709.01.01.01	CERT/ VISUAL INSPECTION	1 EACH	ONE PER ITEM	DATA SHEET VISUAL			
	STEEL CERT CATEGORY 2	1 EACH	ONE PER FORM 406	FORM 406			MANDATORY SUBMITTAL OF DOCUMENTATION PER SPECIFICATION 106.09

MATERIAL/ MATERIAL CODE	TESTS	SAMPLE SIZE	SAMPLE/TEST FREQUENCY	FIELD	DISTRICT/ AREA LAB	MDT HQ LAB	NOTES
STEEL WATER PIPE 709.01.02.01	CERT/ VISUAL INSPECTION	1 EACH	ONE PER ITEM	DATA SHEET OR CERT OF COMP VISUAL			IF WELDING OCCURS, CERTIFICATE OF COMPLIANCE IS SUBMITTAL OF DOCUMENTATION PER SPECIFICATION 624.03.3
	STEEL CERT CATEGORY 2	1 EACH	ONE PER FORM 406	FORM 406			MANDATORY SUBMITTAL OF DOCUMENTATION PER SPECIFICATION 106.09

MATERIAL/ MATERIAL CODE	TESTS	SAMPLE SIZE	SAMPLE/TEST FREQUENCY	FIELD	DISTRICT/ AREA LAB	MDT HQ LAB	NOTES
CORRUGATED STEEL PIPE 709.02.00.01	CERT/ VISUAL INSPECTION	1 EACH	ONE PER ITEM	DATA SHEET VISUAL			
	STEEL CERT CATEGORY 2	1 EACH	ONE PER FORM 406	FORM 406			MANDATORY SUBMITTAL OF DOCUMENTATION PER SPECIFICATION 106.09

MATERIAL/ MATERIAL CODE	TESTS	SAMPLE SIZE	SAMPLE/TEST FREQUENCY	FIELD	DISTRICT/ AREA LAB	MDT HQ LAB	NOTES
STEEL STRUCTURAL PLATE PIPE 709.03.00.01	CERT/ VISUAL INSPECTION	1 EACH	ONE PER ITEM	DATA SHEET VISUAL			
	STEEL CERT CATEGORY 2	1 EACH	ONE PER FORM 406	FORM 406			MANDATORY SUBMITTAL OF DOCUMENTATION PER SPECIFICATION 106.09

MATERIAL/ MATERIAL CODE	TESTS	SAMPLE SIZE	SAMPLE/TEST FREQUENCY	FIELD	DISTRICT/ AREA LAB	MDT HQ LAB	NOTES
CORR ALUMINUM PIPE CULVERT 709.07.00.01	CERT/ VISUAL INSPECTION	1 EACH	ONE PER ITEM	DATA SHEET VISUAL			

MATERIAL/ MATERIAL CODE	TESTS	SAMPLE SIZE	SAMPLE/TEST FREQUENCY	FIELD	DISTRICT/ AREA LAB	MDT HQ LAB	NOTES
SEAMLESS STEEL PIPE 709.09.00.01	CERT/ VISUAL INSPECTION	1 EACH	ONE PER ITEM	DATA SHEET OR CERT OF COMP VISUAL			IF WELDING OCCURS, CERTIFICATE OF COMPLIANCE IS SUBMITTAL OF DOCUMENTATION PER SPECIFICATION 624.03.3
	STEEL CERT CATEGORY 2	1 EACH	ONE PER FORM 406	FORM 406			MANDATORY SUBMITTAL OF DOCUMENTATION PER SPECIFICATION 106.09

MATERIAL/ MATERIAL CODE	TESTS	SAMPLE SIZE	SAMPLE/TEST FREQUENCY	FIELD	DISTRICT/ AREA LAB	MDT HQ LAB	NOTES
COPPER PIPE 709.10.00.01	CERT/ VISUAL INSPECTION	1 EACH	ONE PER ITEM	DATA SHEET VISUAL			

MATERIAL/ MATERIAL CODE	TESTS	SAMPLE SIZE	SAMPLE/TEST FREQUENCY	FIELD	DISTRICT/ AREA LAB	MDT HQ LAB	NOTES
PIPE INSPECTION FOR PIPE SURVEY PC 3	MT 207 WATER CORROSION	1 QT (1 LITER)	PROBABLE, PROPOSED OR EXISTING CENTERLINE OF PIPE, CHANNEL BOTTOM, BRIDGE LOCATIONS AND PROBABLE BORROW AREAS		SAMPLE	TEST	
	MT 232 SOILS CORROSION	5 LB (3 KG)			SAMPLE	TEST	

MATERIAL/ MATERIAL CODE	TESTS	SAMPLE SIZE	SAMPLE/TEST FREQUENCY	FIELD	DISTRICT/ AREA LAB	MDT HQ LAB	NOTES
WARM MIX ADDITIVE 401.02.04.01	CERT/ VISUAL INSPECTION	1 EACH	ONE PER EACH	DATA SHEET			ACCEPTANCE ONLY FROM THE QUALIFIED PRODUCTS LIST

MATERIAL/ MATERIAL CODE	TESTS	SAMPLE SIZE	SAMPLE/TEST FREQUENCY	FIELD	DISTRICT/ AREA LAB	MDT HQ LAB	NOTES
ANTI-STRIPPING ADDITIVE 401.02.05.01	CERT/ VISUAL INSPECTION	1 EACH	ONE PER EACH	DATA SHEET			

MATERIAL/ MATERIAL CODE	TESTS	SAMPLE SIZE	SAMPLE/TEST FREQUENCY	FIELD	DISTRICT/ AREA LAB	MDT HQ LAB	NOTES
PLANT MIX SURFACING GRADE S (3/4") 401.03.01.01	MT 303 SAMPLING BITUMINOUS PAVING MIXTURES	SUFFICIENT QUANTITY IN 2-10 QUART (9.5 LITER) GALVANIZED BUCKETS	ONE EVERY 1000 TONS (MT) OF PLANT MIX PAVEMENT **COMMERCIAL MIXES** ONE EVERY 2000 TONS (MT) OF PLANT MIX PAVEMENT WITH A MINIMUM OF ONE SAMPLE FOR PROJECTS OVER 500 TONS (MT) (NO TESTS ARE REQUIRED FOR CONTRACTS UNDER 500 TONS (MT))		SAMPLE TEST		
	MT 309 REDUCING SAMPLES						
	MT 312 MOISTURE CONTENT		MINIMUM ONE PER DAY				
	MT 314 BULK SPECIFIC GRAVITY		ONE EVERY 1000 TONS (MTONS) OF PLANT MIX PAVEMENT **COMMERCIAL MIXES** ONE EVERY 2000 TONS (MT) OF PLANT MIX PAVEMENT WITH A MINIMUM OF ONE SAMPLE FOR PROJECTS OVER 500 TONS (MT) (NO TESTS ARE REQUIRED FOR CONTRACTS UNDER 500 TONS (MT))				
	MT 319 BINDER CONTENT BY IGNITION METHOD						
	MT 320 IGNITION OVEN AGGREGATE ANALYSIS			TEST			
	MT 321 RICE SPECIFIC GRAVITY						
	MT 332 GYRATORY COMPACTION						
	MT 334 HAMBURG WHEEL-TRACK	45 LBS (20 KG)	ONCE INITIAL JOB MIX TARGETS ARE ESTABLISHED OR FOR START-UP MIX WITH TEST RESULTS OUTSIDE THE BROADBAND LIMITS		SAMPLE	TEST	ADDITIONAL SAMPLES MAY BE TAKEN AT EPM'S DISCRETION
	MT 335 LINEAR KNEADING COMPACTION						
	DENSITY BY CORE	2 - 4" CORES	ONE EVERY 600 TONS (MT) PMP	SAMPLE	TEST		SPECIAL PROVISION SECTION 401.03.21
	MT 602 FINAL RECORD	2 CORES	PER TWO LANE MILE TAKEN AT 1/2 MILE (1 KM) INTERVALS		SAMPLE TEST		

	INDEPENDENT ASSURANCE (PROCEDURAL CHECK)			FIELD	DISTRICT/ AREA LAB	MDT HQ LAB	NOTES
PLANT MIX SURFACING GRADE S (3/4") 401.03.01.01	MT 309 REDUCING SAMPLES	N/A	ONCE PER PROJECT		CHECK	CHECK	PROCEDURAL CHECK MAY BE PERFORMED BY THE DISTRICT/AREA LAB OR MDT HQ LAB
	MT 314 BULK SPECIFIC GRAVITY						
	MT 319 BINDER CONTENT BY IGNITION METHOD						
	MT 320 IGNITION OVEN AGGREGATE ANALYSIS						
	MT 321 RICE SPECIFIC GRAVITY						
	MT 332 GYRATORY COMPACTION						

	Mix Design			FIELD	DISTRICT/ AREA LAB	MDT HQ LAB	NOTES
PLANT MIX SURFACING GRADE S (3/4") 401.03.01.01	MT 201 SAMPLING	800 LBS (636 KG)	ONE PER PLANT MIX DESIGN VERIFICATION		SAMPLE		
	MT 202 SIEVE ANALYSIS					TEST	
	MT 209 L.A. ABRASION						
	MT 213 SAND EQUIVALENT						PRIMARY
	MT 305 VOLUME SWELL CALIPER/MERCURY						SECONDARY
	MT 217 FRACTURE						
	AASHTO T 304 FINE AGGREGATE ANGULARITY						
	ASTM D4791 FLAT & ELONGATED PARTICLES						
	MT 204 SPECIFIC GRAVITY FINE AGG						
	MT 205 SPECIFIC GRAVITY COARSE AGG						
	MT 309 REDUCING SAMPLES						
	MT 314 BULK SPECIFIC GRAVITY						
	MT 321 RICE SPECIFIC GRAVITY						
	MT 332 GYRATORY COMPACTION						
	MT 334 HAMBURG WHEEL-TRACK						
	MT 335 LINEAR KNEADING COMPACTION						
	MT 319 BINDER CONTENT BY IGNITION METHOD						USED FOR PLANT MIX DESIGNS CONTAINING RAP
	MT 320 IGNITION OVEN AGGREGATE ANALYSIS						

MATERIAL/ MATERIAL CODE	TESTS	SAMPLE SIZE	SAMPLE/TEST FREQUENCY	FIELD	DISTRICT/ AREA LAB	MDT HQ LAB	NOTES
PLANT MIX SURFACING GRADE S (1/2") 401.03.01.02	MT 303 SAMPLING BITUMINOUS PAVING MIXTURES	SUFFICIENT QUANTITY IN 2-10 QUART (9.5 LITER) GALVANIZED BUCKETS	ONE EVERY 1000 TONS (MT) OF PLANT MIX PAVEMENT **COMMERCIAL MIXES** ONE EVERY 2000 TONS (MT) OF PLANT MIX PAVEMENT WITH A MINIMUM OF ONE SAMPLE FOR PROJECTS OVER 500 TONS (MT) (NO TESTS ARE REQUIRED FOR CONTRACTS UNDER 500 TONS (MT))		SAMPLE TEST		
	MT 309 REDUCING SAMPLES						
	MT 312 MOISTURE CONTENT		MINIMUM ONE PER DAY				
	MT 314 BULK SPECIFIC GRAVITY		ONE EVERY 1000 TONS (MT) OF PLANT MIX PAVEMENT **COMMERCIAL MIXES** ONE EVERY 2000 TONS (MT) OF PLANT MIX PAVEMENT WITH A MINIMUM OF ONE SAMPLE FOR PROJECTS OVER 500 TONS (MT) (NO TESTS ARE REQUIRED FOR CONTRACTS UNDER 500 TONS (MT))				
	MT 319 BINDER CONTENT BY IGNITION METHOD						
	MT 320 IGNITION OVEN AGGREGATE ANALYSIS			TEST			
	MT 321 RICE SPECIFIC GRAVITY						
	MT 332 GYRATORY COMPACTION						
	MT 334 HAMBURG WHEEL-TRACK	45 LBS (20 KG)	ONCE INITIAL JOB MIX TARGETS ARE ESTABLISHED OR FOR START-UP MIX WITH TEST RESULTS OUTSIDE THE BROADBAND LIMITS		SAMPLE	TEST	ADDITIONAL SAMPLES MAY BE TAKEN AT EPM'S DISCRETION
	MT 335 LINEAR KNEADING COMPACTION						
	DENSITY BY CORE	2 - 4" CORES	ONE EVERY 600 TONS (MT) PMP	SAMPLE	TEST		SPECIAL PROVISION SECTION 401.03.21
	MT 602 FINAL RECORD	2 CORES	PER TWO LANE MILE TAKEN AT 1/2 MILE (1 KM) INTERVALS		SAMPLE TEST		

	INDEPENDENT ASSURANCE (PROCEDURAL CHECK)			FIELD	DISTRICT/ AREA LAB	MDT HQ LAB	NOTES
PLANT MIX SURFACING GRADE S (1/2") 401.03.01.02	MT 309 REDUCING SAMPLES	N/A	ONCE PER PROJECT		CHECK	CHECK	PROCEDURAL CHECK MAY BE PERFORMED BY THE DISTRICT/AREA LAB OR MDT HQ LAB
	MT 314 BULK SPECIFIC GRAVITY						
	MT 319 BINDER CONTENT BY IGNITION METHOD						
	MT 320 IGNITION OVEN AGGREGATE ANALYSIS						
	MT 321 RICE SPECIFIC GRAVITY						
	MT 332 GYRATORY COMPACTION						

	Mix Design			FIELD	DISTRICT/ AREA LAB	MDT HQ LAB	NOTES
PLANT MIX SURFACING GRADE S (1/2") 401.03.01.02	MT 201 SAMPLING	800 LBS (636 KG)	ONE PER PLANT MIX DESIGN VERIFICATION		SAMPLE		
	MT 202 SIEVE ANALYSIS					TEST	
	MT 209 L.A. ABRASION						
	MT 213 SAND EQUIVALENT						PRIMARY
	MT 305 VOLUME SWELL CALIPER/MERCURY						SECONDARY
	MT 217 FRACTURE						
	AASHTO T 304 FINE AGGREGATE ANGULARITY						
	ASTM D4791 FLAT & ELONGATED PARTICLES						
	MT 204 SPECIFIC GRAVITY FINE AGG						
	MT 205 SPECIFIC GRAVITY COARSE AGG						
	MT 309 REDUCING SAMPLES						
	MT 314 BULK SPECIFIC GRAVITY						
	MT 321 RICE SPECIFIC GRAVITY						
	MT 332 GYRATORY COMPACTION						
	MT 334 HAMBURG WHEEL-TRACK						
	MT 335 LINEAR KNEADING COMPACTION						
	MT 319 BINDER CONTENT BY IGNITION METHOD						USED FOR PLANT MIX DESIGNS CONTAINING RAP
	MT 320 IGNITION OVEN AGGREGATE ANALYSIS						

MATERIAL/ MATERIAL CODE	TESTS	SAMPLE SIZE	SAMPLE/TEST FREQUENCY	FIELD	DISTRICT/ AREA LAB	MDT HQ LAB	NOTES
PLANT MIX SURFACING GRADE S (3/8") 401.03.01.06	MT 303 SAMPLING BITUMINOUS PAVING MIXTURES	SUFFICIENT QUANTITY IN 2-10 QUART (9.5 LITER) GALVANIZED BUCKETS	ONE EVERY 1000 TONS (MT) OF PLANT MIX PAVEMENT **COMMERCIAL MIXES** ONE EVERY 2000 TONS (MT) OF PLANT MIX PAVEMENT WITH A MINIMUM OF ONE SAMPLE FOR PROJECTS OVER 500 TONS (MT) (NO TESTS ARE REQUIRED FOR CONTRACTS UNDER 500 TONS (MT))		SAMPLE TEST		
	MT 309 REDUCING SAMPLES						
	MT 312 MOISTURE CONTENT		MINIMUM ONE PER DAY				
	MT 314 BULK SPECIFIC GRAVITY		ONE EVERY 1000 TONS (MT) OF PLANT MIX PAVEMENT **COMMERCIAL MIXES** ONE EVERY 2000 TONS (MT) OF PLANT MIX PAVEMENT WITH A MINIMUM OF ONE SAMPLE FOR PROJECTS OVER 500 TONS (MT) (NO TESTS ARE REQUIRED FOR CONTRACTS UNDER 500 TONS (MT))				
	MT 319 BINDER CONTENT BY IGNITION METHOD						
	MT 320 IGNITION OVEN AGGREGATE ANALYSIS			TEST			
	MT 321 RICE SPECIFIC GRAVITY						
	MT 332 GYRATORY COMPACTION						
	MT 334 HAMBURG WHEEL-TRACK	45 LBS (20 KG)	ONCE INITIAL JOB MIX TARGETS ARE ESTABLISHED OR FOR START-UP MIX WITH TEST RESULTS OUTSIDE THE BROADBAND LIMITS		SAMPLE	TEST	ADDITIONAL SAMPLES MAY BE TAKEN AT EPM'S DISCRETION
	MT 335 LINEAR KNEADING COMPACTION						
	DENSITY BY CORE	2 - 4" CORES	ONE EVERY 600 TONS (MT) PMP	SAMPLE	TEST		SPECIAL PROVISION SECTION 401.03.21
	MT 602 FINAL RECORD	2 CORES	PER TWO LANE MILE TAKEN AT 1/2 MILE (1 KM) INTERVALS		SAMPLE TEST		

	INDEPENDENT ASSURANCE (PROCEDURAL CHECK)			FIELD	DISTRICT/ AREA LAB	MDT HQ LAB	NOTES
PLANT MIX SURFACING GRADE S (3/8") 401.03.01.06	MT 309 REDUCING SAMPLES	N/A	ONCE PER PROJECT		CHECK	CHECK	PROCEDURAL CHECK MAY BE PERFORMED BY THE DISTRICT/AREA LAB OR MDT HQ LAB
	MT 314 BULK SPECIFIC GRAVITY						
	MT 319 BINDER CONTENT BY IGNITION METHOD						
	MT 320 IGNITION OVEN AGGREGATE ANALYSIS						
	MT 321 RICE SPECIFIC GRAVITY						
	MT 332 GYRATORY COMPACTION						

	Mix Design			FIELD	DISTRICT/ AREA LAB	MDT HQ LAB	NOTES
PLANT MIX SURFACING GRADE S (3/8") 401.03.01.06	MT 201 SAMPLING	800 LBS (636 KG)	ONE PER PLANT MIX DESIGN VERIFICATION		SAMPLE		
	MT 202 SIEVE ANALYSIS					TEST	
	MT 209 LOS ANGELES ABRASION						
	MT 213 SAND EQUIVALENT TEST						PRIMARY
	MT 305 VOLUME SWELL CALIPER/MERCURY						SECONDARY
	MT 217 FRACTURE						
	AASHTO T 304 FINE AGGREGATE ANGULARITY						
	ASTM D4791 FLAT & ELONGATED PARTICLES						
	MT 204 SPECIFIC GRAVITY FINE AGG						
	MT 205 SPECIFIC GRAVITY COARSE AGG						
	MT 309 REDUCING SAMPLES						
	MT 314 BULK SPECIFIC GRAVITY						
	MT 321 RICE SPECIFIC GRAVITY						
	MT 332 GYRATORY COMPACTION						
	MT 334 HAMBURG WHEEL-TRACK						
	MT 335 LINEAR KNEADING COMPACTION						
	MT 319 BINDER CONTENT BY IGNITION METHOD						USED FOR PLANT MIX DESIGNS CONTAINING RAP
	MT 320 IGNITION OVEN AGGREGATE ANALYSIS						

MATERIAL/ MATERIAL CODE	TESTS	SAMPLE SIZE	SAMPLE/TEST FREQUENCY	FIELD	DISTRICT/ AREA LAB	MDT HQ LAB	NOTES
PLANT MIX SURFACING GRADE D 401.03.01.03	MT 303 SAMPLING BITUMINOUS PAVING MIXTURES	SUFFICIENT QUANTITY IN 2-10 QUART (9.5 LITER) GALVANIZED BUCKETS	ONE EVERY 1000 TONS (MT) OF PLANT MIX PAVEMENT **COMMERCIAL MIXES** ONE EVERY 2000 TONS (MT) OF PLANT MIX PAVEMENT WITH A MINIMUM OF ONE SAMPLE FOR PROJECTS OVER 500 TONS (MT) (NO TESTS ARE REQUIRED FOR CONTRACTS UNDER 500 TONS (MT))		SAMPLE TEST		
	MT 309 REDUCING SAMPLES						
	MT 312 MOISTURE CONTENT		MINIMUM ONE PER DAY				
	MT 314 BULK SPECIFIC GRAVITY		ONE EVERY 1000 TONS (MT) OF PLANT MIX PAVEMENT **COMMERCIAL MIXES** ONE EVERY 2000 TONS (MT) OF PLANT MIX PAVEMENT WITH A MINIMUM OF ONE SAMPLE FOR PROJECTS OVER 500 TONS (MT) (NO TESTS ARE REQUIRED FOR CONTRACTS UNDER 500 TONS (MT))				
	MT 319 BINDER CONTENT BY IGNITION METHOD						
	MT 320 IGNITION OVEN AGGREGATE ANALYSIS			TEST			
	MT 321 RICE SPECIFIC GRAVITY						
	AASHTO T 245 MARSHALL METHOD						
	MT 334 HAMBURG WHEEL-TRACK	45 LBS (20 KG)	ONCE INITIAL JOB MIX TARGETS ARE ESTABLISHED OR FOR START-UP MIX WITH TEST RESULTS OUTSIDE THE BROADBAND LIMITS		SAMPLE	TEST	ADDITIONAL SAMPLES MAY BE TAKEN AT EPM'S DISCRETION
	MT 335 LINEAR KNEADING COMPACTION						
	DENSITY BY CORE	2 - 4" CORES	ONE EVERY 600 TONS (MT) PMP	SAMPLE	TEST		SPECIAL PROVISION SECTION 401.03.21
	MT 602 FINAL RECORD	2 CORES	PER TWO LANE MILE TAKEN AT 1/2 MILE (1 KM) INTERVALS		SAMPLE TEST		

	INDEPENDENT ASSURANCE (PROCEDURAL CHECK)			FIELD	DISTRICT/ AREA LAB	MDT HQ LAB	NOTES
PLANT MIX SURFACING GRADE D 401.03.01.03	MT 309 REDUCING SAMPLES	N/A	ONCE PER PROJECT		CHECK	CHECK	PROCEDURAL CHECK MAY BE PERFORMED BY THE DISTRICT/AREA LAB OR MDT HQ LAB
	MT 314 BULK SPECIFIC GRAVITY						
	MT 319 BINDER CONTENT BY IGNITION METHOD						
	MT 320 IGNITION OVEN AGGREGATE ANALYSIS						
	MT 321 RICE SPECIFIC GRAVITY						
	AASHTO T 245 MARSHALL METHOD						

	Mix Design			FIELD	DISTRICT/ AREA LAB	MDT HQ LAB	NOTES
PLANT MIX SURFACING GRADE D 401.03.01.03	MT 201 SAMPLING	800 LBS (636 KG)	ONE PER PLANT MIX DESIGN VERIFICATION		SAMPLE		
	MT 202 SIEVE ANALYSIS					TEST	
	MT 204 SPECIFIC GRAVITY FINE AGG						
	MT 205 SPECIFIC GRAVITY COARSE AGG						
	MT 217 FRACTURE						
	MT 309 REDUCING SAMPLES						
	MT 314 BULK SPECIFIC GRAVITY						
	MT 321 RICE SPECIFIC GRAVITY						
	AASHTO T 245 MARSHALL METHOD						
	MT 334 HAMBURG WHEEL-TRACK						
	MT 335 LINEAR KNEADING COMPACTION						
	MT 319 BINDER CONTENT BY IGNITION METHOD						USED FOR PLANT MIX DESIGNS CONTAINING RAP
	MT 320 IGNITION OVEN AGGREGATE ANALYSIS						
	AASHTO T 283 MODIFIED LOTTMAN	N/A				VERIFY	VERIFY TEST RESULTS FROM CONTRACTOR/CONSULTANT PROVIDING MIX DESIGN

MATERIAL/ MATERIAL CODE	TESTS	SAMPLE SIZE	SAMPLE/TEST FREQUENCY	FIELD	DISTRICT/ AREA LAB	MDT HQ LAB	NOTES
PLANT MIX SEAL COURSE 401.03.01.05	MT 217 FRACTURE	20 LBS (9 KG)	ONE EVERY 600 TONS (MT) PMSC		SAMPLE TEST		
	MT 303 SAMPLING BITUMINOUS PAVING MIXTURES						
	MT 309 REDUCING SAMPLES						
	MT 319 BINDER CONTENT BY IGNITION METHOD						
	MT 320 IGNITION OVEN AGGREGATE ANALYSIS			TEST			
	INDEPENDENT ASSURANCE (PROCEDURAL CHECK)			**FIELD**	**DISTRICT/ AREA LAB**	**MDT HQ LAB**	**NOTES**
	MT 309 REDUCING SAMPLES	N/A	ONCE PER PROJECT		CHECK	CHECK	PROCEDURAL CHECK MAY BE PERFORMED BY THE DISTRICT/AREA LAB OR MDT HQ LAB
	MT 319 BINDER CONTENT BY IGNITION METHOD						
	MT 320 IGNITION OVEN AGGREGATE ANALYSIS						

	Mix Design			FIELD	DISTRICT/ AREA LAB	MDT HQ LAB	NOTES
PLANT MIX SEAL COURSE 401.03.01.05	MT 201 SAMPLING	800 LBS (363 KG)	ONE PER PLANT MIX SEAL COURSE MIX DESIGN		SAMPLE		
	MT 202 SIEVE ANALYSIS					TEST	
	MT 204 SPECIFIC GRAVITY FINE AGG						
	MT 205 SPECIFIC GRAVITY COARSE AGG						
	MT 208 LIQUID LIMIT						
	MT 208A PLASTIC LIMIT & PLASTICITY INDEX						
	MT 209 LOS ANGELES ABRASION						
	MT 213 SAND EQUIVALENT TEST						
	MT 217 FRACTURE						
	MT 305 VOLUME SWELL CALIPER/MERCURY						
	AASHTO T 304 FINE AGGREGATE ANGULARITY						
	ASTM D4791 FLAT & ELONGATED PARTICLES						
	MT 338 DRAIN DOWN						
	MT 332 GYRATORY COMPACTION					VERIFY	

MATERIAL/ MATERIAL CODE	TESTS	SAMPLE SIZE	SAMPLE/TEST FREQUENCY	FIELD	DISTRICT/ AREA LAB	MDT HQ LAB	NOTES
EPA SPECIFICATION USED OIL FUEL 401.03.02.01	CERT/ VISUAL INSPECTION	1 EACH	ONE PER PROJECT	CERT OF COMP			

MATERIAL/ MATERIAL CODE	TESTS	SAMPLE SIZE	SAMPLE/TEST FREQUENCY	FIELD	DISTRICT/ AREA LAB	MDT HQ LAB	NOTES
COLD RECYCLED PLANT MIX 405.01.21.01	CERT/ VISUAL INSPECTION	N/A	ONE PER PROJECT	VISUAL			VERIFY ITEM MEETS MDT REQUIREMENTS
	MT 312 MOISTURE CONTENT	MINIMUM 2.2 LB (1 KG) MOISTURE PROOF CONTAINER	ONE EVERY 3000 FT PAVER PATH	SAMPLE	TEST		
	Mix Design			**FIELD**	**DISTRICT/ AREA LAB**	**MDT HQ LAB**	**NOTES**
	CERT/ VISUAL INSPECTION	1 EACH	ONE PER COLD RECYCLED PLANT MIX DESIGN	MIX DESIGN		APPROVAL	CERTIFICATION IS THE CONTRACTOR'S MIX DESIGN

MATERIAL/ MATERIAL CODE	TESTS	SAMPLE SIZE	SAMPLE/TEST FREQUENCY	FIELD	DISTRICT/ AREA LAB	MDT HQ LAB	NOTES
COLD IN-PLACE RECYCLED - ENGR EMULSION 405.02.01.01	CERT/ VISUAL INSPECTION	1 EACH	ONE PER LOT OR BATCH	CERT OF COMP			

MATERIAL/ MATERIAL CODE	TESTS	SAMPLE SIZE	SAMPLE/TEST FREQUENCY	FIELD	DISTRICT/ AREA LAB	MDT HQ LAB	NOTES
CORES FOR STRIPPING ANALYSIS PC 4	MT 331 SAMPLING & EVALUATING STRIPPING PAVEMENTS	1 EACH	SEE MT 331		SAMPLE	TEST	

MATERIAL/ MATERIAL CODE	TESTS	SAMPLE SIZE	SAMPLE/TEST FREQUENCY	FIELD	DISTRICT/ AREA LAB	MDT HQ LAB	NOTES
SNOW POLES 619.03.08.02	CERT/ VISUAL INSPECTION	1 EACH	ONE PER LOT/BATCH	DATA SHEET VISUAL			

MATERIAL/ MATERIAL CODE	TESTS	SAMPLE SIZE	SAMPLE/TEST FREQUENCY	FIELD	DISTRICT/ AREA LAB	MDT HQ LAB	NOTES
SIGNING SHEET ALUMINUM 704.01.01.01	CERT/ VISUAL INSPECTION	1 EACH	ONE PER LOT/BATCH	DATA SHEET VISUAL			

MATERIAL/ MATERIAL CODE	TESTS	SAMPLE SIZE	SAMPLE/TEST FREQUENCY	FIELD	DISTRICT/ AREA LAB	MDT HQ LAB	NOTES
STEEL SIGN POSTS 704.01.04.01	CERT/ VISUAL INSPECTION	1 EACH	ONE PER EACH	DATA SHEET			
	STEEL CERT CATEGORY 2	1 EACH	ONE PER FORM 406	FORM 406			MANDATORY SUBMITTAL OF DOCUMENTATION PER SPECIFICATION 106.09

MATERIAL/ MATERIAL CODE	TESTS	SAMPLE SIZE	SAMPLE/TEST FREQUENCY	FIELD	DISTRICT/ AREA LAB	MDT HQ LAB	NOTES
STRUCTURAL STEEL SIGN POSTS 704.01.04.02	CERT/ VISUAL INSPECTION	1 EACH	ONE PER EACH	DATA SHEET VISUAL			
	STEEL CERT CATEGORY 2	1 EACH	ONE PER FORM 406	FORM 406			MANDATORY SUBMITTAL OF DOCUMENTATION PER SPECIFICATION 106.09

MATERIAL/ MATERIAL CODE	TESTS	SAMPLE SIZE	SAMPLE/TEST FREQUENCY	FIELD	DISTRICT/ AREA LAB	MDT HQ LAB	NOTES
ALUMINUM SIGN POSTS 704.01.04.05	CERT/ VISUAL INSPECTION	1 EACH	ONE PER LOT	DATA SHEET			

SIGNING

SPECIALS, SUPPLEMENTAL AND STANDARD SPECS, DETAILED DWGS

MATERIAL/ MATERIAL CODE	TESTS	SAMPLE SIZE	SAMPLE/TEST FREQUENCY	FIELD	DISTRICT/ AREA LAB	MDT HQ LAB	NOTES
BREAKAWAY DEVICES 704.01.04.06	CERT/ VISUAL INSPECTION	1 EACH	ONE PER EACH	DATA SHEET			ACCEPTANCE ONLY FROM THE QUALIFIED PRODUCTS LIST
	STEEL CERT CATEGORY 2	1 EACH	ONE PER FORM 406	FORM 406			MANDATORY SUBMITTAL OF DOCUMENTATION PER SPECIFICATION 106.09

MATERIAL/ MATERIAL CODE	TESTS	SAMPLE SIZE	SAMPLE/TEST FREQUENCY	FIELD	DISTRICT/ AREA LAB	MDT HQ LAB	NOTES
WOOD POSTS & POLES 704.01.06.01	CERT/ VISUAL INSPECTION	N/A	ONE PER LOT/BATCH	VISUAL			VERIFY SEAL NUMBERS CORRESPOND WITH PRE-INSPECTION RECORDS
	MT 404 INSPECTING WOOD PRODUCTS	20 BORINGS	ONE PER CHARGE		PRE-INSPECTION		

MATERIAL/ MATERIAL CODE	TESTS	SAMPLE SIZE	SAMPLE/TEST FREQUENCY	FIELD	DISTRICT/ AREA LAB	MDT HQ LAB	NOTES
OVERHEAD STRUCTURES 704.01.08.01	CERT/ VISUAL INSPECTION	N/A	ONE PER EACH	VISUAL	PRE-INSPECTION		
	STEEL CERT CATEGORY 1	1 EACH	ONE PER FORM 406	FORM 406			MANDATORY SUBMITTAL OF DOCUMENTATION FOR EACH HEAT #

MATERIAL/ MATERIAL CODE	TESTS	SAMPLE SIZE	SAMPLE/TEST FREQUENCY	FIELD	DISTRICT/ AREA LAB	MDT HQ LAB	NOTES
RETRO-REFLECTIVE SHEETING 704.01.10.01	CERT/ VISUAL INSPECTION	1 EACH	ONE PER LOT/BATCH	DATA SHEET			

SIGNING

SPECIALS, SUPPLEMENTAL AND STANDARD SPECS, DETAILED DWGS

MATERIAL/ MATERIAL CODE	TESTS	SAMPLE SIZE	SAMPLE/TEST FREQUENCY	FIELD	DISTRICT/ AREA LAB	MDT HQ LAB	NOTES
SURFACE MOUNT FLEXIBLE DELINEATORS 704.03.00.01	CERT/ VISUAL INSPECTION	1 EACH	ONE PER LOT/BATCH	DATA SHEET VISUAL			ACCEPTANCE ONLY FROM THE QUALIFIED PRODUCTS LIST

MATERIAL/ MATERIAL CODE	TESTS	SAMPLE SIZE	SAMPLE/TEST FREQUENCY	FIELD	DISTRICT/ AREA LAB	MDT HQ LAB	NOTES
DRIVABLE FLEXIBLE DELINEATORS 704.03.00.02	CERT/ VISUAL INSPECTION	1 EACH	ONE PER LOT/BATCH	DATA SHEET VISUAL			ACCEPTANCE ONLY FROM THE QUALIFIED PRODUCTS LIST
	STEEL CERT CATEGORY 2	1 EACH	ONE PER FORM 406	FORM 406			MANDATORY SUBMITTAL OF DOCUMENTATION PER SPECIFICATION 106.09

MATERIAL/ MATERIAL CODE	TESTS	SAMPLE SIZE	SAMPLE/TEST FREQUENCY	FIELD	DISTRICT/ AREA LAB	MDT HQ LAB	NOTES
SMOOTH DOWEL BARS 501.02.03.01	CERT/ VISUAL INSPECTION	1 EACH	ONE PER SHIPMENT	DATA SHEET			ACCEPTANCE ONLY FROM THE QUALIFIED PRODUCTS LIST
	STEEL CERT CATEGORY 2	1 EACH	ONE PER FORM 406	FORM 406			MANDATORY SUBMITTAL OF DOCUMENTATION PER SPECIFICATION 106.09

MATERIAL/ MATERIAL CODE	TESTS	SAMPLE SIZE	SAMPLE/TEST FREQUENCY	FIELD	DISTRICT/ AREA LAB	MDT HQ LAB	NOTES
DOWEL BAR SLEEVE 501.02.03.02	CERT/ VISUAL INSPECTION	1 EACH	ONE PER SHIPMENT	DATA SHEET			VERIFY ITEM MEETS MDT REQUIREMENTS

MATERIAL/ MATERIAL CODE	TESTS	SAMPLE SIZE	SAMPLE/TEST FREQUENCY	FIELD	DISTRICT/ AREA LAB	MDT HQ LAB	NOTES
TIE BARS, GRADE 40 501.02.04.01	CERT/ VISUAL INSPECTION	1 EACH	ONE PER SHIPMENT	DATA SHEET			ACCEPTANCE ONLY FROM THE QUALIFIED PRODUCTS LIST
	STEEL CERT CATEGORY 2	1 EACH	ONE PER FORM 406	FORM 406			MANDATORY SUBMITTAL OF DOCUMENTATION PER SPECIFICATION 106.09

MATERIAL/ MATERIAL CODE	TESTS	SAMPLE SIZE	SAMPLE/TEST FREQUENCY	FIELD	DISTRICT/ AREA LAB	MDT HQ LAB	NOTES
REBAR GRADE 40 711.01.01.01	CERT/ VISUAL INSPECTION	1 EACH	ONE PER SHIPMENT	DATA SHEET			ACCEPTANCE ONLY FROM THE QUALIFIED PRODUCTS LIST
	STEEL CERT CATEGORY 2	1 EACH	ONE PER FORM 406	FORM 406			MANDATORY SUBMITTAL OF DOCUMENTATION PER SPECIFICATION 106.09

MATERIAL/ MATERIAL CODE	TESTS	SAMPLE SIZE	SAMPLE/TEST FREQUENCY	FIELD	DISTRICT/ AREA LAB	MDT HQ LAB	NOTES
REBAR GRADE 60 711.01.01.02	CERT/ VISUAL INSPECTION	1 EACH	ONE PER SHIPMENT	DATA SHEET			ACCEPTANCE ONLY FROM THE QUALIFIED PRODUCTS LIST
	STEEL CERT CATEGORY 2	1 EACH	ONE PER FORM 406	FORM 406			MANDATORY SUBMITTAL OF DOCUMENTATION PER SPECIFICATION 106.09

STEEL

SPECIALS, SUPPLEMENTAL AND STANDARD SPECS, DETAILED DWGS

MATERIAL/ MATERIAL CODE	TESTS	SAMPLE SIZE	SAMPLE/TEST FREQUENCY	FIELD	DISTRICT/ AREA LAB	MDT HQ LAB	NOTES
REBAR GRADE 75 711.01.01.04	CERT/ VISUAL INSPECTION	1 EACH	ONE PER SHIPMENT	DATA SHEET			ACCEPTANCE ONLY FROM THE QUALIFIED PRODUCTS LIST
	STEEL CERT CATEGORY 2	1 EACH	ONE PER FORM 406	FORM 406			MANDATORY SUBMITTAL OF DOCUMENTATION PER SPECIFICATION 106.09

MATERIAL/ MATERIAL CODE	TESTS	SAMPLE SIZE	SAMPLE/TEST FREQUENCY	FIELD	DISTRICT/ AREA LAB	MDT HQ LAB	NOTES
MECHANICAL REBAR CONNECTORS 711.01.01.03	CERT/ VISUAL INSPECTION	1 EACH	ONE PER SHIPMENT	DATA SHEET			
	STEEL CERT CATEGORY 2	1 EACH	ONE PER FORM 406	FORM 406			MANDATORY SUBMITTAL OF DOCUMENTATION PER SPECIFICATION 106.09

MATERIAL/ MATERIAL CODE	TESTS	SAMPLE SIZE	SAMPLE/TEST FREQUENCY	FIELD	DISTRICT/ AREA LAB	MDT HQ LAB	NOTES
REBAR EPOXY COATING 711.01.02.01	CERT/ VISUAL INSPECTION	1 EACH	ONE PER SHIPMENT	DATA SHEET VISUAL			ACCEPTANCE ONLY FROM THE QUALIFIED PRODUCTS LIST

MATERIAL/ MATERIAL CODE	TESTS	SAMPLE SIZE	SAMPLE/TEST FREQUENCY	FIELD	DISTRICT/ AREA LAB	MDT HQ LAB	NOTES
REINFORCING WIRE, WIRE MESH 711.01.03.01	CERT/ VISUAL INSPECTION	1 EACH	ONE PER SHIPMENT	DATA SHEET			ACCEPTANCE ONLY FROM THE QUALIFIED PRODUCTS LIST
	STEEL CERT CATEGORY 2	1 EACH	ONE PER FORM 406	FORM 406			MANDATORY SUBMITTAL OF DOCUMENTATION PER SPECIFICATION 106.09

MATERIAL/ MATERIAL CODE	TESTS	SAMPLE SIZE	SAMPLE/TEST FREQUENCY	FIELD	DISTRICT/ AREA LAB	MDT HQ LAB	NOTES
STRUCTURAL STEEL 711.02.00.01	CERT/ VISUAL INSPECTION	1 EACH	ONE PER SHIPMENT	DATA SHEET OR CERT OF COMP			IF WELDING OCCURS, CERTIFICATE OF COMPLIANCE IS SUBMITTAL OF DOCUMENTATION PER SPECIFICATION 624.03.3
	STEEL CERT CATEGORY 1	1 EACH	ONE PER FORM 406	FORM 406			MANDATORY SUBMITTAL OF DOCUMENTATION FOR EACH HEAT # REQUIRED ONLY IF MATERIAL HAS NOT BEEN PRE-INSPECTED
	MT 415 STRUCTURAL STEEL	1 EACH	ONE PER ITEM		PRE-INSPECTION		

STEEL

SPECIALS, SUPPLEMENTAL AND STANDARD SPECS, DETAILED DWGS

MATERIAL/ MATERIAL CODE	TESTS	SAMPLE SIZE	SAMPLE/TEST FREQUENCY	FIELD	DISTRICT/ AREA LAB	MDT HQ LAB	NOTES
STRUCTURAL STEEL TUBING 711.03.00.01	CERT/ VISUAL INSPECTION	1 EACH	ONE PER ITEM	DATA SHEET OR CERT OF COMP			IF WELDING OCCURS, CERTIFICATE OF COMPLIANCE IS SUBMITTAL OF DOCUMENTATION PER SPECIFICATION 624.03.3
	STEEL CERT CATEGORY 1	1 EACH	ONE PER FORM 406	FORM 406			MANDATORY SUBMITTAL OF DOCUMENTATION FOR EACH HEAT #

MATERIAL/ MATERIAL CODE	TESTS	SAMPLE SIZE	SAMPLE/TEST FREQUENCY	FIELD	DISTRICT/ AREA LAB	MDT HQ LAB	NOTES
PINS & ROLLERS 711.04.00.01	CERT/ VISUAL INSPECTION	1 EACH	ONE PER ITEM	DATA SHEET			
	STEEL CERT CATEGORY 1	1 EACH	ONE PER FORM 406	FORM 406			MANDATORY SUBMITTAL OF DOCUMENTATION FOR EACH HEAT #

MATERIAL/ MATERIAL CODE	TESTS	SAMPLE SIZE	SAMPLE/TEST FREQUENCY	FIELD	DISTRICT/ AREA LAB	MDT HQ LAB	NOTES
HIGH TENSILE STRENGTH BOLTS 711.06.00.01	STEEL CERT CATEGORY 2	1 EACH	ONE PER FORM 406	FORM 406			MANDATORY SUBMITTAL OF DOCUMENTATION PER SPECIFICATION 106.09
	MT 407 HIGH STRENGTH BOLTS	1 BOLT	ONE TEST PER LOT/BATCH	SAMPLE		TEST	
	ASTM F959 DIRECT TENSION INDICATORS	1 DTI	ONE TEST PER LOT/BATCH				

MATERIAL/ MATERIAL CODE	TESTS	SAMPLE SIZE	SAMPLE/TEST FREQUENCY	FIELD	DISTRICT/ AREA LAB	MDT HQ LAB	NOTES
BOLTS, NUTS, THREADED ROD 711.07.00.01	CERT/ VISUAL INSPECTION	1 EACH	ONE TEST PER LOT/BATCH	VISUAL			

STEEL

SPECIALS, SUPPLEMENTAL AND STANDARD SPECS, DETAILED DWGS

MATERIAL/ MATERIAL CODE	TESTS	SAMPLE SIZE	SAMPLE/TEST FREQUENCY	FIELD	DISTRICT/ AREA LAB	MDT HQ LAB	NOTES
GALVANIZED METAL 711.08.00.01	CERT/ VISUAL INSPECTION	1 EACH	ONE TEST PER LOT/BATCH	DATA SHEET			
	STEEL CERT CATEGORY 2	1 EACH	ONE PER FORM 406	FORM 406			MANDATORY SUBMITTAL OF DOCUMENTATION PER SPECIFICATION 106.09

MATERIAL/ MATERIAL CODE	TESTS	SAMPLE SIZE	SAMPLE/TEST FREQUENCY	FIELD	DISTRICT/ AREA LAB	MDT HQ LAB	NOTES
WELDED STUD SHEAR CONNECTORS 711.09.00.01	CERT/ VISUAL INSPECTION	1 EACH	ONE PER SHIPMENT	DATA SHEET OR CERT OF COMP			IF WELDING OCCURS, CERTIFICATE OF COMPLIANCE IS SUBMITTAL OF DOCUMENTATION PER SPECIFICATION 624.03.3
	STEEL CERT CATEGORY 2	1 EACH	ONE PER FORM 406	FORM 406			MANDATORY SUBMITTAL OF DOCUMENTATION PER SPECIFICATION 106.09 REQUIRED ONLY IF MATERIAL HAS NOT BEEN PRE-INSPECTED
	MT 409 WELDED STUD SHEAR CONNECTORS	1 EACH	ONE PER ITEM		PRE-INSPECTION		

MATERIAL/ MATERIAL CODE	TESTS	SAMPLE SIZE	SAMPLE/TEST FREQUENCY	FIELD	DISTRICT/ AREA LAB	MDT HQ LAB	NOTES
PRESTRESSING STEEL 711.11.00.01	CERT/ VISUAL INSPECTION	1 EACH	ONE PER ITEM	DATA SHEET			
	STEEL CERT CATEGORY 2	1 EACH	ONE PER FORM 406	FORM 406			MANDATORY SUBMITTAL OF DOCUMENTATION PER SPECIFICATION 106.09
	ASTM A416 SEVEN WIRE STRAND	8 FT (3 M)	ONE TEST PER LOT	SAMPLE		TEST	

STEEL

SPECIALS, SUPPLEMENTAL AND STANDARD SPECS, DETAILED DWGS

MATERIAL/ MATERIAL CODE	TESTS	SAMPLE SIZE	SAMPLE/TEST FREQUENCY	FIELD	DISTRICT/ AREA LAB	MDT HQ LAB	NOTES
STEEL CASTINGS 711.12.01.01	CERT/ VISUAL INSPECTION	1 EACH	ONE PER LOT/ITEM	DATA SHEET			
	STEEL CERT CATEGORY 2	1 EACH	ONE PER FORM 406	FORM 406			MANDATORY SUBMITTAL OF DOCUMENTATION PER SPECIFICATION 106.09

MATERIAL/ MATERIAL CODE	TESTS	SAMPLE SIZE	SAMPLE/TEST FREQUENCY	FIELD	DISTRICT/ AREA LAB	MDT HQ LAB	NOTES
MISCELLANEOUS DRAINAGE CASTINGS 711.12.03.01	CERT/ VISUAL INSPECTION	1 EACH	ONE PER LOT/ITEM	DATA SHEET			
	STEEL CERT CATEGORY 2	1 EACH	ONE PER FORM 406	FORM 406			MANDATORY SUBMITTAL OF DOCUMENTATION PER SPECIFICATION 106.09

MATERIAL/ MATERIAL CODE	TESTS	SAMPLE SIZE	SAMPLE/TEST FREQUENCY	FIELD	DISTRICT/ AREA LAB	MDT HQ LAB	NOTES
CAST INLET GRATES 711.12.03.02	CERT/ VISUAL INSPECTION	1 EACH	ONE PER LOT/ITEM	DATA SHEET			ACCEPTANCE ONLY FROM THE QUALIFIED PRODUCTS LIST
	STEEL CERT CATEGORY 2	1 EACH	ONE PER FORM 406	FORM 406			

MATERIAL/ MATERIAL CODE	TESTS	SAMPLE SIZE	SAMPLE/TEST FREQUENCY	FIELD	DISTRICT/ AREA LAB	MDT HQ LAB	NOTES
STRUCTURAL ANCHOR BOLTS 711.13.00.01	CERT/ VISUAL INSPECTION	1 EACH	ONE PER ITEM	DATA SHEET			
	STEEL CERT CATEGORY 2	1 EACH	ONE PER FORM 406	FORM 406			MANDATORY SUBMITTAL OF DOCUMENTATION PER SPECIFICATION 106.09

MATERIAL/ MATERIAL CODE	TESTS	SAMPLE SIZE	SAMPLE/TEST FREQUENCY	FIELD	DISTRICT/ AREA LAB	MDT HQ LAB	NOTES
METAL BIN-TYPE RETAINING WALLS 711.17.00.01	CERT/ VISUAL INSPECTION	1 EACH	ONE PER LOT/ITEM	DATA SHEET			
	STEEL CERT CATEGORY 2	1 EACH	ONE PER FORM 406	FORM 406			MANDATORY SUBMITTAL OF DOCUMENTATION PER SPECIFICATION 106.09

STEEL

SPECIALS, SUPPLEMENTAL AND STANDARD SPECS, DETAILED DWGS

MATERIAL/ MATERIAL CODE	TESTS	SAMPLE SIZE	SAMPLE/TEST FREQUENCY	FIELD	DISTRICT/ AREA LAB	MDT HQ LAB	NOTES
ROCK/SOIL ANCHOR 711.18.00.01	CERT/ VISUAL INSPECTION	1 EACH	ONE PER LOT/ITEM	DATA SHEET			
	STEEL CERT CATEGORY 2	1 EACH	ONE PER FORM 406	FORM 406			MANDATORY SUBMITTAL OF DOCUMENTATION PER SPECIFICATION 106.09 DOES NOT APPLY TO BIT

MATERIAL/ MATERIAL CODE	TESTS	SAMPLE SIZE	SAMPLE/TEST FREQUENCY	FIELD	DISTRICT/ AREA LAB	MDT HQ LAB	NOTES
HIGH STRENGTH WIRE ROCKFALL MESH 711.21.00.01	CERT/ VISUAL INSPECTION	1 EACH	ONE PER LOT/ITEM	DATA SHEET			
	STEEL CERT CATEGORY 2	1 EACH	ONE PER FORM 406	FORM 406			MANDATORY SUBMITTAL OF DOCUMENTATION PER SPECIFICATION 106.09 DOES NOT APPLY TO BIT

STREAM PRESERVATION

SPECIALS, SUPPLEMENTAL AND STANDARD SPECS, DETAILED DWGS

MATERIAL/ MATERIAL CODE	TESTS	SAMPLE SIZE	SAMPLE/TEST FREQUENCY	FIELD	DISTRICT/ AREA LAB	MDT HQ LAB	NOTES
TEMPORARY ROLLED EROSION CONTROL 208.02.00.01	CERT/ VISUAL INSPECTION	1 EACH	ONE PER ITEM	CERT OF COMP OR DATA SHEET			CERTIFICATE OF COMPLIANCE IS REQUIRED FOR ALL EROSION CONTROL THAT CONTAINS STRAW

MATERIAL/ MATERIAL CODE	TESTS	SAMPLE SIZE	SAMPLE/TEST FREQUENCY	FIELD	DISTRICT/ AREA LAB	MDT HQ LAB	NOTES
PLANTS - TREES & SHRUBS 208.02.01.01	CERT/ VISUAL INSPECTION	1 EACH	ONE PER ITEM	DATA SHEET VISUAL			VERIFY ITEM MEETS MDT REQUIREMENTS

MATERIAL/ MATERIAL CODE	TESTS	SAMPLE SIZE	SAMPLE/TEST FREQUENCY	FIELD	DISTRICT/ AREA LAB	MDT HQ LAB	NOTES
LOG 208.02.02.01	CERT/ VISUAL INSPECTION	N/A	ONE PER ITEM	VISUAL			VERIFY ITEM MEETS MDT REQUIREMENTS

MATERIAL/ MATERIAL CODE	TESTS	SAMPLE SIZE	SAMPLE/TEST FREQUENCY	FIELD	DISTRICT/ AREA LAB	MDT HQ LAB	NOTES
ROOT WAD 208.02.02.02	CERT/ VISUAL INSPECTION	N/A	ONE PER ITEM	VISUAL			VERIFY ITEM MEETS MDT REQUIREMENTS

MATERIAL/ MATERIAL CODE	TESTS	SAMPLE SIZE	SAMPLE/TEST FREQUENCY	FIELD	DISTRICT/ AREA LAB	MDT HQ LAB	NOTES
STREAM PRESERVATION 208.02.02.03	CERT/ VISUAL INSPECTION	N/A	ONE PER ITEM	VISUAL			VERIFY ITEM MEETS MDT REQUIREMENTS

MATERIAL/ MATERIAL CODE	TESTS	SAMPLE SIZE	SAMPLE/TEST FREQUENCY	FIELD	DISTRICT/ AREA LAB	MDT HQ LAB	NOTES
STREAMBED AGGREGATE 208.02.03.01	CERT/ VISUAL INSPECTION	N/A	ONE PER MATERIAL TYPE	VISUAL			VERIFY ITEM MEETS MDT REQUIREMENTS
	MT 201 SAMPLING	SAMPLE PER MT 201	ONE PER SOURCE	SAMPLE			
	MT 202 SIEVE ANALYSIS			TEST			

MATERIAL/ MATERIAL CODE	TESTS	SAMPLE SIZE	SAMPLE/TEST FREQUENCY	FIELD	DISTRICT/ AREA LAB	MDT HQ LAB	NOTES
CERT OF COMP FOR TRAFFIC CONTROL/ MAILBOX 618.03.02.01	CERT/ VISUAL INSPECTION	1 EACH	ONE PER PROJECT	CSB618_02			TEMPORARY TRAFFIC CONTROL
				CERT OF COMP			OTHER MATERIAL SUCH AS MAILBOX SUPPORT

BUILDING MATERIALS

STRUCTURE MATERIAL

SPECIALS, SUPPLEMENTAL AND STANDARD SPECS, DETAILED DWGS

MATERIAL/ MATERIAL CODE	TESTS	SAMPLE SIZE	SAMPLE/TEST FREQUENCY	FIELD	DISTRICT/ AREA LAB	MDT HQ LAB	NOTES
BIRD SPIKES BM.699.01.01	CERT/ VISUAL INSPECTION	1 EACH	ONE PER EACH TYPE	VISUAL			

MATERIAL/ MATERIAL CODE	TESTS	SAMPLE SIZE	SAMPLE/TEST FREQUENCY	FIELD	DISTRICT/ AREA LAB	MDT HQ LAB	NOTES
GLUE LAMINATED BEAMS BM.699.01.02	CERT/ VISUAL INSPECTION	1 EACH	ONE PER BEAM	DATA SHEET			

MATERIAL/ MATERIAL CODE	TESTS	SAMPLE SIZE	SAMPLE/TEST FREQUENCY	FIELD	DISTRICT/ AREA LAB	MDT HQ LAB	NOTES
INSULATION BM.699.01.03	CERT/ VISUAL INSPECTION	1 EACH	ONE PER EACH	DATA SHEET			

MATERIAL/ MATERIAL CODE	TESTS	SAMPLE SIZE	SAMPLE/TEST FREQUENCY	FIELD	DISTRICT/ AREA LAB	MDT HQ LAB	NOTES
METAL ROOFING BM.699.01.04	CERT/ VISUAL INSPECTION	1 EACH	ONE PER EACH	DATA SHEET			
	STEEL CERT CATEGORY 2	1 EACH	ONE PER FORM 406	FORM 406			MANDATORY SUBMITTAL OF DOCUMENTATION PER SPECIFICATION 106.09

MATERIAL/ MATERIAL CODE	TESTS	SAMPLE SIZE	SAMPLE/TEST FREQUENCY	FIELD	DISTRICT/ AREA LAB	MDT HQ LAB	NOTES
METAL SIDING & SOFFIT BM.699.01.05	CERT/ VISUAL INSPECTION	1 EACH	ONE PER EACH	DATA SHEET			
	STEEL CERT CATEGORY 2	1 EACH	ONE PER FORM 406	FORM 406			MANDATORY SUBMITTAL OF DOCUMENTATION PER SPECIFICATION 106.09

BUILDING MATERIALS

STRUCTURE MATERIAL

SPECIALS, SUPPLEMENTAL AND STANDARD SPECS, DETAILED DWGS

MATERIAL/ MATERIAL CODE	TESTS	SAMPLE SIZE	SAMPLE/TEST FREQUENCY	FIELD	DISTRICT/ AREA LAB	MDT HQ LAB	NOTES
PICNIC SHELTER (NON PRECAST) BM.699.01.06	CERT/ VISUAL INSPECTION	1 EACH	ONE PER EACH	DATA SHEET			

MATERIAL/ MATERIAL CODE	TESTS	SAMPLE SIZE	SAMPLE/TEST FREQUENCY	FIELD	DISTRICT/ AREA LAB	MDT HQ LAB	NOTES
QUARRY TILE BM.699.01.07	CERT/ VISUAL INSPECTION	1 EACH	ONE PER EACH	DATA SHEET			

MATERIAL/ MATERIAL CODE	TESTS	SAMPLE SIZE	SAMPLE/TEST FREQUENCY	FIELD	DISTRICT/ AREA LAB	MDT HQ LAB	NOTES
ROOF JOIST BM.699.01.08	CERT/ VISUAL INSPECTION	1 EACH	ONE PER EACH	DATA SHEET			
	STEEL CERT CATEGORY 2	1 EACH	ONE PER FORM 406	FORM 406			MANDATORY SUBMITTAL OF DOCUMENTATION PER SPECIFICATION 106.09

MATERIAL/ MATERIAL CODE	TESTS	SAMPLE SIZE	SAMPLE/TEST FREQUENCY	FIELD	DISTRICT/ AREA LAB	MDT HQ LAB	NOTES
INTERIOR/ EXTERIOR BUILDING TAPE & PAINT BM.699.01.09	CERT/ VISUAL INSPECTION	1 EACH	ONE PER EACH	DATA SHEET			

BUILDING MATERIALS

STRUCTURE MATERIAL

SPECIALS, SUPPLEMENTAL AND STANDARD SPECS, DETAILED DWGS

MATERIAL/ MATERIAL CODE	TESTS	SAMPLE SIZE	SAMPLE/TEST FREQUENCY	FIELD	DISTRICT/ AREA LAB	MDT HQ LAB	NOTES
MASONARY/ THROUGH WALL FLASHING BM.699.01.10	CERT/ VISUAL INSPECTION	1 EACH	ONE PER EACH	VISUAL			

MATERIAL/ MATERIAL CODE	TESTS	SAMPLE SIZE	SAMPLE/TEST FREQUENCY	FIELD	DISTRICT/ AREA LAB	MDT HQ LAB	NOTES
PRE-PACKAGED MORTAR BM.699.01.11	CERT/ VISUAL INSPECTION	1 EACH	ONE PER PROJECT, PER TYPE	DATA SHEET			

MATERIAL/ MATERIAL CODE	TESTS	SAMPLE SIZE	SAMPLE/TEST FREQUENCY	FIELD	DISTRICT/ AREA LAB	MDT HQ LAB	NOTES
CMU BM.699.01.12	CERT/ VISUAL INSPECTION	1 EACH	ONE PER PROJECT, PER TYPE	DATA SHEET			

MATERIAL/ MATERIAL CODE	TESTS	SAMPLE SIZE	SAMPLE/TEST FREQUENCY	FIELD	DISTRICT/ AREA LAB	MDT HQ LAB	NOTES
SRW BLOCK BM.699.01.13	CERT/ VISUAL INSPECTION	1 EACH	ONE PER PROJECT, PER TYPE	DATA SHEET			

BUILDING MATERIALS

STRUCTURE MATERIAL

SPECIALS, SUPPLEMENTAL AND STANDARD SPECS, DETAILED DWGS

MATERIAL/ MATERIAL CODE	TESTS	SAMPLE SIZE	SAMPLE/TEST FREQUENCY	FIELD	DISTRICT/ AREA LAB	MDT HQ LAB	NOTES
MASONRY SIDING BM.699.01.14	CERT/ VISUAL INSPECTION	1 EACH	ONE PER PROJECT, PER TYPE	DATA SHEET			

MATERIAL/ MATERIAL CODE	TESTS	SAMPLE SIZE	SAMPLE/TEST FREQUENCY	FIELD	DISTRICT/ AREA LAB	MDT HQ LAB	NOTES
INTERIOR/ EXTERIOR GLASS AND GLAZING BM.699.01.15	CERT/ VISUAL INSPECTION	1 EACH	ONE PER EACH	DATA SHEET			

ELECTRICAL/MECHANICAL

SPECIALS, SUPPLEMENTAL AND STANDARD SPECS, DETAILED DWGS

MATERIAL/ MATERIAL CODE	TESTS	SAMPLE SIZE	SAMPLE/TEST FREQUENCY	FIELD	DISTRICT/ AREA LAB	MDT HQ LAB	NOTES
ELECTRICAL BM.699.02.01	CERT/ VISUAL INSPECTION	1 EACH	ONE PER EACH	DATA SHEET			

MATERIAL/ MATERIAL CODE	TESTS	SAMPLE SIZE	SAMPLE/TEST FREQUENCY	FIELD	DISTRICT/ AREA LAB	MDT HQ LAB	NOTES
HVAC SYSTEM BM.699.02.02	CERT/ VISUAL INSPECTION	1 EACH	ONE PER EACH COMPONENT, PER TYPE, PER PROJECT	DATA SHEET			

BUILDING MATERIALS

ELECTRICAL/MECHANICAL

SPECIALS, SUPPLEMENTAL AND STANDARD SPECS, DETAILED DWGS

MATERIAL/ MATERIAL CODE	TESTS	SAMPLE SIZE	SAMPLE/TEST FREQUENCY	FIELD	DISTRICT/ AREA LAB	MDT HQ LAB	NOTES
INTERIOR FIXTURES & FEATURES BM.699.02.03	CERT/ VISUAL INSPECTION	1 EACH	ONE PER EACH	VISUAL			

MATERIAL/ MATERIAL CODE	TESTS	SAMPLE SIZE	SAMPLE/TEST FREQUENCY	FIELD	DISTRICT/ AREA LAB	MDT HQ LAB	NOTES
PROPANE TANK BM.699.02.04	CERT/ VISUAL INSPECTION	1 EACH	ONE PER EACH	DATA SHEET			
	STEEL CERT CATEGORY 2	1 EACH	ONE PER FORM 406	FORM 406			MANDATORY SUBMITTAL OF DOCUMENTATION PER SPECIFICATION 106.09

PLUMBING

SPECIALS, SUPPLEMENTAL AND STANDARD SPECS, DETAILED DWGS

MATERIAL/ MATERIAL CODE	TESTS	SAMPLE SIZE	SAMPLE/TEST FREQUENCY	FIELD	DISTRICT/ AREA LAB	MDT HQ LAB	NOTES
IRRIGATION SYSTEM BM.699.03.01	CERT/ VISUAL INSPECTION	1 EACH	ONE PER EACH	DATA SHEET			

MATERIAL/ MATERIAL CODE	TESTS	SAMPLE SIZE	SAMPLE/TEST FREQUENCY	FIELD	DISTRICT/ AREA LAB	MDT HQ LAB	NOTES
PLUMBING BM.699.03.02	CERT/ VISUAL INSPECTION	1 EACH	ONE PER EACH	DATA SHEET			

BUILDING MATERIALS

PLUMBING

SPECIALS, SUPPLEMENTAL AND STANDARD SPECS, DETAILED DWGS

MATERIAL/ MATERIAL CODE	TESTS	SAMPLE SIZE	SAMPLE/TEST FREQUENCY	FIELD	DISTRICT/ AREA LAB	MDT HQ LAB	NOTES
WASTE WATER TREATMENT SYSTEM BM.699.03.03	CERT/ VISUAL INSPECTION	1 EACH	ONE PER EACH	DATA SHEET			

MATERIAL/ MATERIAL CODE	TESTS	SAMPLE SIZE	SAMPLE/TEST FREQUENCY	FIELD	DISTRICT/ AREA LAB	MDT HQ LAB	NOTES
WASTE WATER UTILITY PIPE & APPURTENANCE BM.699.03.04	CERT/ VISUAL INSPECTION	1 EACH	ONE PER EACH	DATA SHEET			

MATERIAL/ MATERIAL CODE	TESTS	SAMPLE SIZE	SAMPLE/TEST FREQUENCY	FIELD	DISTRICT/ AREA LAB	MDT HQ LAB	NOTES
WASTE WATER PUMPS, FITTINGS & VALVES BM.699.03.05	CERT/ VISUAL INSPECTION	1 EACH	ONE PER EACH	DATA SHEET			

MATERIAL/ MATERIAL CODE	TESTS	SAMPLE SIZE	SAMPLE/TEST FREQUENCY	FIELD	DISTRICT/ AREA LAB	MDT HQ LAB	NOTES
WELL PUMPS, FITTINGS & VALVES BM.699.03.07	CERT/ VISUAL INSPECTION	1 EACH	ONE PER EACH	DATA SHEET			

ACCESSORIES

SPECIALS, SUPPLEMENTAL AND STANDARD SPECS, DETAILED DWGS

MATERIAL/ MATERIAL CODE	TESTS	SAMPLE SIZE	SAMPLE/TEST FREQUENCY	FIELD	DISTRICT/ AREA LAB	MDT HQ LAB	NOTES
BENCHES (NON PRECAST) BM.699.04.01	CERT/ VISUAL INSPECTION	1 EACH	ONE PER EACH	DATA SHEET			

BUILDING MATERIALS

ACCESSORIES

SPECIALS, SUPPLEMENTAL AND STANDARD SPECS, DETAILED DWGS

MATERIAL/ MATERIAL CODE	TESTS	SAMPLE SIZE	SAMPLE/TEST FREQUENCY	FIELD	DISTRICT/ AREA LAB	MDT HQ LAB	NOTES
PICNIC TABLES (NON PRECAST) BM.699.04.02	CERT/ VISUAL INSPECTION	1 EACH	ONE PER EACH	DATA SHEET			

MATERIAL/ MATERIAL CODE	TESTS	SAMPLE SIZE	SAMPLE/TEST FREQUENCY	FIELD	DISTRICT/ AREA LAB	MDT HQ LAB	NOTES
TRASH RECEPTACLES (NON PRECAST) BM.699.04.03	CERT/ VISUAL INSPECTION	1 EACH	ONE PER EACH	DATA SHEET			

MATERIAL/ MATERIAL CODE	TESTS	SAMPLE SIZE	SAMPLE/TEST FREQUENCY	FIELD	DISTRICT/ AREA LAB	MDT HQ LAB	NOTES
FIRE EXTINGUISHERS & CABINETS BM.699.04.04	CERT/ VISUAL INSPECTION	1 EACH	ONE PER EACH	DATA SHEET			

MATERIAL/ MATERIAL CODE	TESTS	SAMPLE SIZE	SAMPLE/TEST FREQUENCY	FIELD	DISTRICT/ AREA LAB	MDT HQ LAB	NOTES
FLAG POLES (ALUMINUM) BM.699.04.05	CERT/ VISUAL INSPECTION	1 EACH	ONE PER EACH	DATA SHEET			

MATERIAL/ MATERIAL CODE	TESTS	SAMPLE SIZE	SAMPLE/TEST FREQUENCY	FIELD	DISTRICT/ AREA LAB	MDT HQ LAB	NOTES
TOILET ROOM ACCESSORIES BM.699.04.06	CERT/ VISUAL INSPECTION	1 EACH	ONE PER EACH	VISUAL			

BUILDING MATERIALS

DOOR/DISPLAY

SPECIALS, SUPPLEMENTAL AND STANDARD SPECS, DETAILED DWGS

MATERIAL/ MATERIAL CODE	TESTS	SAMPLE SIZE	SAMPLE/TEST FREQUENCY	FIELD	DISTRICT/ AREA LAB	MDT HQ LAB	NOTES
ALUMINUM STOREFRONT BM.699.05.01	CERT/ VISUAL INSPECTION	1 EACH	ONE PER EACH	DATA SHEET			

MATERIAL/ MATERIAL CODE	TESTS	SAMPLE SIZE	SAMPLE/TEST FREQUENCY	FIELD	DISTRICT/ AREA LAB	MDT HQ LAB	NOTES
DISPLAY CASES BM.699.05.02	CERT/ VISUAL INSPECTION	1 EACH	ONE PER EACH	DATA SHEET			

MATERIAL/ MATERIAL CODE	TESTS	SAMPLE SIZE	SAMPLE/TEST FREQUENCY	FIELD	DISTRICT/ AREA LAB	MDT HQ LAB	NOTES
HOLLOW METAL DOORS & FRAMES BM.699.05.03	CERT/ VISUAL INSPECTION	1 EACH	ONE PER EACH	VISUAL			

MATERIAL/ MATERIAL CODE	TESTS	SAMPLE SIZE	SAMPLE/TEST FREQUENCY	FIELD	DISTRICT/ AREA LAB	MDT HQ LAB	NOTES
OVERHEAD GARAGE DOORS BM.699.05.04	CERT/ VISUAL INSPECTION	1 EACH	ONE PER EACH	DATA SHEET			

BUILDING MATERIALS

SCALE SITE SPECIFIC

SPECIALS, SUPPLEMENTAL AND STANDARD SPECS, DETAILED DWGS

MATERIAL/ MATERIAL CODE	TESTS	SAMPLE SIZE	SAMPLE/TEST FREQUENCY	FIELD	DISTRICT/ AREA LAB	MDT HQ LAB	NOTES
SCALE PIT STRUCTURAL ITEMS BM.699.06.01	CERT/ VISUAL INSPECTION	1 EACH	ONE PER EACH	DATA SHEET			IF MATERIAL IS STEEL OR PRECAST, A STEEL CERT IS REQUIRED
	STEEL CERT CATEGORY 2	1 EACH	ONE PER FORM 406	FORM 406			MANDATORY SUBMITTAL OF DOCUMENTATION PER SPECIFICATION 106.09

MATERIAL/ MATERIAL CODE	TESTS	SAMPLE SIZE	SAMPLE/TEST FREQUENCY	FIELD	DISTRICT/ AREA LAB	MDT HQ LAB	NOTES
SCALE ELECTRONICS, TRANSDUCERS, AND DISPLAYS BM.699.06.02	CERT/ VISUAL INSPECTION	1 EACH	ONE PER EACH	DATA SHEET			

METHODS OF SAMPLING AND TESTING
MT 602-13
ACCEPTANCE, INDEPENDENT ASSURANCE AND FINAL RECORD SAMPLING

1 SCOPE:

1.1.1 Samples are to be obtained on a random basis for materials specified in MT 601 and in specified quantities as related to yards, tons or other units of measurement.

This test method documents the use of and the rates and frequencies associated with the acceptance of samples, independent assurance of procedures, and final records.

Classes of Samples and Tests: Three classes of samples and tests are required for each project. They are "Acceptance samples and tests," "Independent Assurance samples and tests," and "Final Record samples and tests."

2 REFERENCE DOCUMENTS:

2.1 Acceptance Samples and Tests

MT 606 Random Sampling Techniques

2.2 Independent Assurance (IA)

MT 601 Materials Sampling, Testing and Acceptance Guide
(Various Procedures in the following categories):

- Aggregate
- Aggregate Surfacing
- Bituminous
- Concrete
- Excavation
- Plant Mix Pavement

3 ACCEPTANCE SAMPLING AND TESTING:

Random sampling and testing in accordance with MT 601 to ensure the quality of materials being incorporated or proposed for incorporation into a construction project. Acceptance sampling and testing are the principal means to assure materials and workmanship are in accordance with the contract. The number of samples and the distribution of the locations from which they are taken should be such as to ensure the materials incorporated are acceptable and in accordance with the contract requirements. Sampling and testing frequencies listed are a minimum. As job conditions vary, such as the uniformity of materials at the source, the methods and equipment used, and weather conditions, further sampling and testing can be done. Acceptance sampling and testing may be any of the following:

- Samples of materials witnessed, taken and/or tested by MDT personnel or delegated inspection agency.
- Samples taken and/or tested by the manufacturer or supplier with test results or certificates submitted to the Department.

4 INDEPENDENT ASSURANCE (IA):

Per 23 CFR 637, Independent Assurance Program is defined as activities that are an unbiased and independent evaluation of all the sampling and testing procedures used in the acceptance program. IA results are not used directly for determining the quality and acceptability of the materials and workmanship on a project, but serve as checks on the reliability of the results obtained in project acceptance sampling and testing.

4 INDEPENDENT ASSURANCE (IA): (continued)

The elements of the Department's IA Program are as follows:

- IA sampling and testing frequencies as established in MT 601
- Prompt comparison and documentation of test results obtained from split sample and proficiency sample evaluations
- Department established tolerances for the comparison of test results
- Evaluation of testing personnel procedures through observations and results of split samples and proficiency samples
- Testing equipment evaluation using calibration checks, split samples and proficiency samples

4.1 Independent Assurance Comparison (IAC)

Description – IAC tests (also known as split samples) are performed to verify conformance with testing criteria through review of test results on equivalent samples.

Purpose – IAC's are used to eliminate materials and sampling variability from the analysis so only the variability due to the testing procedures and the equipment are evaluated.

Frequency - MT 601 lists the minimum frequencies at which Independent Assurance Comparison samples are taken. These are reviewed and approved by the FHWA.

Responsibility - IAC's are a joint effort between Field Construction technicians, District/Area Materials Lab technicians, and MDT Materials Headquarter technicians. IAC requirements apply to all persons conducting acceptance sampling and testing on behalf of MDT.

Sampling - These samples are taken at random per MT 606 from materials or from construction work in progress and are not necessarily intended to check compliance with specifications. They are taken and tested to provide an independent spot check of the adequacy and effectiveness of the results obtained in acceptance sampling and testing. If differences are discovered between acceptance samples and Independent assurance samples, it must be determined immediately why deviations exist and corrective measures taken to assure proper testing techniques and equipment are being utilized. If independent assurance samples are to accomplish the purpose for which they are intended, they must be the same sample or taken at the same place, by the same method and at the same time as routine acceptance samples.

When an IAC sample is required, the technician performing acceptance testing obtains a sample, performs the initial acceptance test and documents the results. This sample then becomes the IAC sample that will be tested by the District/Area Materials Lab technician or MDT Materials Headquarters technician or both. To maintain the integrity of the sample, it is critical that all materials used for testing (with the exception of the wash sample) be recombined to their original configuration prior to transferring to the next testing facility.

Sampling concrete aggregate shall be done by the District Laboratory Supervisor or a designated representative.

Independent assurance samples are selected by MDT personnel who are not associated with the taking of acceptance samples on the project, or from samples taken for acceptance purposes provided such samples have been taken under their observation and control. Independent assurance samples are to be continuously in the custody or under the observation of properly trained personnel not associated with acceptance sampling until they are shipped or delivered to the District/Area Laboratory or the Materials Bureau for testing.

4.1 Independent Assurance Comparison (IAC): (continued)

Testing IAC Samples - The IAC sample must be taken to the laboratory and tested without delay. The results obtained for each of the required tests are to be delivered promptly to the Project Manager. Results should be compared with acceptance test results obtained on similar material and an evaluation made as to the accuracy of the acceptance sampling and testing. Project personnel should be notified if improved procedures, closer inspection and control, or possible corrective action are required.

Controlling test results – IAC results are not used directly for determining the quality and acceptability of the materials on a project. Acceptance test results take precedence in the event of conflicting results unless extenuating circumstances are identified.

Tolerance – Department IAC tolerances are identified per the following table:

MATERIAL CATEGORY	TEST METHOD	REFERENCE DOCUMENT	TOLERANCE
AGGREGATE	MT 202 SIEVE ANALYSIS	MT 226	REFER TO MT 226 FOR ACCEPTABLE DEVIATION
AGGREGATE SURFACING	MT 202 SIEVE ANALYSIS	MT 226	REFER TO MT 226 FOR ACCEPTABLE DEVIATION
AGGREGATE SURFACING	MT 208 LIQUID LIMIT	AASHTO T89	MULTILABORATORY RESULTS DIFFER BY MORE THAN 13% OF THEIR MEAN
AGGREGATE SURFACING	MT 208A PLASTICITY INDEX	AASHTO T90	MULTILABORATORY RESULTS DIFFER BY MORE THAN 18% OF THEIR MEAN
AGGREGATE SURFACING	MT 217 MECHANICAL FRACTURES	ASTM D5821	MULTILABORATORY RESULTS DIFFER BY MORE THAN 14.7% OF THEIR MEAN

IAC results that are considered unsatisfactory must be investigated by the appropriate District Materials Supervisor to identify the cause and any corrective action needed. Document corrective action taken for the project file with copies sent to the Inspection Operations Supervisor. Unsatisfactory IACs should be brought to the attention of the corresponding Project Manager. Failure to demonstrate the following are typical causes of an unsatisfactory IAC.

- Test results within the tolerance
- Proper equipment to conduct sampling and testing
- Equipment properly calibrated and in good working order
- Sampling and testing conducted according to prescribed MT methods
- Willingness to participate in an IAC (Indicate refusal in remarks section of the IAC report)

Every effort should be made to correct equipment or procedural problems immediately. A follow-up IAC investigation must be initiated within five working days to ensure that equipment and procedures are satisfactory. The IAC must be repeated until the problem is corrected and a satisfactory IAC is completed.

Reporting – Results of IAC's including corrective action is recorded in SiteManager.

4.2 Independent Assurance Procedural (IAP)

Description – IAP checks are performed to verify conformance with contract standards and testing criteria through review of test procedures. The IAP will be conducted on the jobsite while the tester is in the process of running normal acceptance testing for job control.

Purpose – A key part of the IAP is witnessing the sampling and testing to verify that proper procedures are being followed. The calibration and condition of sampling and testing equipment used should be carefully checked.

Frequency - The frequencies at which IAP checks are performed should conform in general to MT 601. These frequencies have been reviewed and approved by the FHWA. Rigid conformity with a frequency pattern established as a guide for general application is not expected. In general, the given frequencies are set at a minimum. Each IAP assessment performed on a project may fulfill the same IAP requirement for other projects when performed by the same technician within 30 days.

Responsibility - IAP's are a joint effort between the District/Area Materials Lab Supervisors, Area Lab Coordinators, District and Area Lab Technicians and MDT Materials Headquarter personnel. IAP requirements apply to all persons conducting acceptance sampling and testing on behalf of MDT. IAP's must be performed by personnel not normally involved in the acceptance testing for the project.

Acceptability – IAP results that are considered unsatisfactory must be investigated by the appropriate District Materials Supervisor or MDT Materials Headquarter personnel to identify the cause and corrective action needed. Document any corrective action for the project file with copies sent to the Inspection Operations Supervisor. Unsatisfactory IAP's should be brought to the attention of the corresponding Project Manager. Failure to demonstrate the following are typical causes of an unsatisfactory IAP.

- Proper equipment to conduct sampling and testing
- Equipment properly calibrated and in good working order
- Sampling and testing conducted according to prescribed MT methods
- Willingness to participate in an IAC (Indicate refusal in the remarks section of the IAP report)

The personnel proctoring the IAP will explain to the tester why the test was unsatisfactory and how it needs to be corrected. Every effort should be made to correct equipment or procedural problems at this time. The IAP should then be repeated until the problem is corrected and a satisfactory IAP is completed. If a satisfactory IAP cannot be achieved due to tester deficiencies, notification and documentation will be provided to the WAQTC coordinator and additional training or revocation of certification may be required.

Reporting – Results of IAC's, including corrective action, is recorded in SiteManager.

4.3 Proficiency Samples

Description – Proficiency testing is an outline designed to test accuracy of District/Area Laboratories and MDT Materials Headquarter Laboratories.

Purpose – Laboratories can judge their testing results by comparing them to a large body of results performed on the same material. The quality of test results can be demonstrated, thereby reducing the risk of disputes due to testing errors. The program also provides laboratories with the means to check both the testing apparatus and the operator under actual testing conditions.

Processing Material and Sample Distribution – Homogeneity of samples is controlled during the production process. Materials are selected from known sources and are inspected when received. The materials are thoroughly blended in accordance with established schemes. The sample is then reduced for the multiple-testing process.

4.3 Proficiency Samples: (continued)

Frequency - Proficiency samples are distributed to participants once per year, with a pair of unique samples provided each time. When testing is complete, laboratories submit their testing results for analysis.

Tests – Proficiency tests are performed on the following procedures:

- MT 202 Sieve Analysis of Fine and Coarse Aggregate
- MT 205 Specific Gravity and Absorption of Coarse Aggregate
- MT 208 Liquid Limit
- MT 208A Plastic Limit & Plasticity Index
- MT 217 Percentage of Mechanically Fractured Particles
- MT 210 Proctor (5.5 LB)
- MT 230 Proctor (10 LB)
- MT 305 Volume Swell of Bituminous Mixtures – Caliper Method
- MT 314 Bulk Specific Gravity of Compacted Bituminous Mixtures
- MT 319 Asphalt Binder Content of Hot Mix Asphalt (HMA) by Ignition Method
- MT 320 Mechanical Analysis of Aggregate Recovered from Ignition Oven Burn
- MT 321 Determining Maximum Specific Gravity of Bituminous Paving Mixtures – "Rice Method"
- MT 332 Gyratory Compaction of Bituminous Mixtures

Responsibility – The Inspection Operations Unit of the Physical Testing Section is responsible for composition, distribution, analysis and reporting of proficiency samples.

Reporting – When an individual laboratory completes the proficiency sample testing, the technician reports results to the Inspection Operations Unit. Results from all laboratories are then compiled and reports are distributed to each individual laboratory. If corrective actions are required, a notification will be sent out by the Inspection Operations Unit to laboratories with deficient results. The District Material Laboratory Supervisor is responsible for responding to the deficiency.

4.4 Lab and Equipment Inspections

Description – The Physical Testing Section conducts annual inspections on District, Area, and MDT Materials Headquarters Laboratories and equipment used for acceptance testing.

Purpose - Laboratory and equipment inspections are performed to demonstrate competency in the performance of specific test procedures and that testing equipment is within procedural requirements.

Frequency - Equipment and procedural inspections are performed annually.

Responsibility - The Inspection Operations Unit conducts and reports procedural inspections performed in District and Area Laboratories. MDT Materials Headquarters Laboratory Supervisors conduct procedural inspections on technicians performing testing under their supervision. Equipment calibrations and verifications are a joint effort between the Inspection Operations Unit and MDT Materials Laboratory Supervisors.

Reporting – Procedures observed by the Inspection Operations personnel are entered into SiteManager and summarized in a hard copy report that is sent to the District Administrator and Materials Bureau Engineer. Equipment calibrations and verifications are entered into SiteManager by the applicable Materials Laboratory Supervisor or a designated representative. Each laboratory is responsible for sustaining up to date calibration/verification of testing equipment. An equipment status report may be generated by Oracle.

5 FINAL RECORD (FR):

Description – FR samples are physical comparisons between design plan dimensions and those actually achieved during construction.

Purpose – FR core samples are taken and analyzed for the following purposes:

- To determine adequacy of pavement thickness and other construction requirements but not for the purpose of checking compliance with specification requirements. These samples are taken to verify conformity with plans and specification requirements applicable to the completed construction.

- To furnish information relative to the amounts of change in properties of the material used in the work. FR samples and tests are for physical research purposes to ascertain the need and basis for possible improvements in future designs and specifications.

- To determine if corrective measures may be necessary. FR samples and tests serve to indicate whether previously unknown or unsuspected conditions may exist on the project that may have a detrimental effect on the completed construction.

Frequency of Sampling: The frequency of FR samples is stated in MT 601.

Responsibility - Samples must be witnessed by or under the direct supervision of the District/Area Lab Supervisor or their designated representative and must not be scheduled on such an inflexible and regular routine that its frequency can be predicted. Sufficient samples must be submitted to satisfy the frequency intended.

Sampling and Testing - These samples are taken at random per MT 606 from completed construction work or completed portions thereof.

FR samples should be taken at each individual stage of the construction work as it is completed and before it is covered or disturbed by a subsequent construction stage. This minimizes damage to finished work and facilitates the satisfactory procurement of samples. FR core sample locations will be referenced to centerline.

Whenever test results indicate that significant changes have occurred (because of processing, contamination, or other reasons, after the materials were incorporated into the construction), these changes should be reported with an explanation.

Reporting – Results of FR samples including corrective action are recorded in SiteManager.

METHODS OF SAMPLING AND TESTING
MT 603-10
DEFINITIONS

SOIL ENGINEERING TERMS:

Dust Ratio – The ratio of the portion passing the 200 mesh sieve to the portion passing the 40-mesh sieve and shall be no greater than two-thirds.

Degradation Value – A specification set for each project using aggregate and is defined as a value from 100 to 0 indicating the quality of fines produced by self-abrasion of aggregate in the presence of water. (100 is superior and below 35 is poor).

Gradation – A term used to describe the range and the relative distribution of particle sizes in a material.

Well-graded soils – Those soils, which have a good representation of all particle sizes from the largest to the smallest but with a very small percentage of fines.

Poorly-graded soils – Those soils in which the range of particle sizes is very small or soils having a deficiency in some of the intermediate sizes or soils containing excessive fines.

Liquid Limit – The moisture content, which is the boundary between the liquid and plastic states for the minus No. 40 fraction of a soil. For laboratory purposes it may be defined as the moisture content at which that soil fraction will close a standard groove for a length of 1/2 inch when subjected to 25 blows in a liquid limit device.

Moisture Content – The weight of water in a given soil mass divided by the oven dry weight of the soil and is expressed in percent.

Optimum Moisture – The moisture content, which will permit maximum-dry-unit weight to be obtained for a given comp active effort.

Plastic Limit – The moisture content, which is the boundary between the plastic and semi-solid states for the minus No. 40 fraction of the soil. For laboratory purposes, it may be defined as the minimum moisture content at which the soil fraction can be rolled into a thread 1/8 inch in diameter without crumbling.

Plastic Index – The numerical difference between the moisture content of the Liquid Limit and the moisture content of the Plastic Limit.

R-Value – The resistance value (R-value) test is a material stiffness test. The test procedure expresses a materials resistance to deformation as a function of the ratio of transmitted lateral pressure to applied vertical pressure. R-value is expressed as a numerical value from 0 to 100 with 0 being easily deformed by light loads. R-value, along with traffic volumes, are used in the pavement design process to determine the proper surfacing structure for a given project.

Wear Value – A specification set for each project using aggregate and is defined as the percentage of dry weight lost during the abrasion of coarse aggregate in a Los Angeles Machine with an abrasive charge.

SPECIFIC GRAVITY TERMS:

Absolute – The ratio of the weight of a given volume of solids to the weight of an equal volume of water at a stated temperature.

Apparent – The ratio of the weight of a given volume of impermeable material (the solid matter including impermeable pores) to the weight of an equal volume of water.

Specific Gravity terms: (continued)

Bulk – The ratio of the weight of a given volume of permeable material (including both permeable and impermeable voids) to the weight of an equal volume of water.

Permeability – A measure of the facility of a soil to transmit liquids, largely dependent upon grain size distribution.

"Rice" Gravity – Defined as the maximum specific gravity (absolute) of the uncompacted bituminous mixture.

HIGHWAY TERMS:

Base – Foundation for pavement.

Base Course – A term used to include the layers of relatively high quality materials placed above the sub-grade as a stress distribution medium to insure that the stress induced in the sub-grade will not exceed its strength.

Binder Course – The course, in sheet asphalt and bituminous concrete pavements, placed between base and surface courses.

Bleeding – The upward migration of bituminous material resulting in a film of bitumen on the surface.

Blow-Up – Localized buckling or shattering of rigid pavement caused by excessive longitudinal pressure.

Cement Treated Base (CTB) – A mixture of a well graded aggregate and measured amounts of Portland cement and water, compacted to a high density to provide a durable base for paving.

Construction Joint – The vertical or notched plane of separation in pavement.

Contraction Joint – A full depth or weakened plane type joint designed to establish the position of any crack caused by contraction while providing no space for expansion of the pavement beyond its original length.

Corrugations – The regular transverse undulations in a pavement surface consisting of alternate valleys and crests.

Cracks – The approximately vertical cleavage due to natural causes or traffic action.

Crazing – A pattern of cracking extending only through the surface layer, a result of more drying shrinkage in the surface than the interior of plastic concrete.

"D" Lines – Disintegration characterized by successive formation of a series of fine cracks at rather close intervals paralleling edges, joints and cracks and usually curving across slab corners, initial cracks forming very close to slab edges and additional cracks progressively developing, ordinarily filled with calcareous deposits.

Disintegration – Deterioration into small fragments from any cause.

Distortion – Any deviation of pavement surface from the original shape.

Expansion Joints – A joint permitting the pavement to expand in length.

Faulting – The differential vertical displacement of slabs adjacent to joints or cracks.

Highway terms: (continued)

Flecking – The dislodgement of a thin film of mortar from the outermost portion of occasional coarse aggregate particles on concrete surfaces, generally attributable to lack of bond between mortar and aggregate.

Flexible Base and Pavements – A bituminous pavement consisting of a well-graded aggregate combined with asphalt cement and with sufficiently low bending resistance to maintain intimate contact with the underlying structure and to distribute loads to the foundation by aggregate interlock, particle friction, or surface tension. Principle elements of flexible pavements are wearing surface, base, sub-base and sub-grades.

Frost Heave – The lifting and distortion of a surface due to internal action of frost resulting from subsurface ice formation; affects soil, rock, pavement, and other structures.

Joints – Constructed junctions between adjacent sections of pavement or between pavement and structures.

Leveling Course – A course of variable thickness constructed immediately on top of base material or existing pavement to remove large irregularities prior to super-imposed treatment or construction. (Binder course may function as leveling course and be called Binder course, Leveling course or Binder-Leveling course).

Longitudinal Joint – Either a full depth or weakened-plane type joint constructed parallel to or along the centerline to control longitudinal cracking.

Map Cracking – Disintegration in which cracking of the slab surface develops in a random pattern; may develop over the entire surface or localized areas.

Pitting – The displacement of aggregate particles from the pavement surface due to the action of traffic or disintegration, without major displacement of cementing material.

Plane of Failure – The depth at which the voids in the wheel path and/or between the wheel path are comparable to the voids in the passing lane.

Progressive Scale – Concrete disintegration that at first appears as surface scaling but gradually progresses deeper.

Pumping – Displacement and ejection of water and suspended fine particles at joints, cracks and edges.

Raveling – The progressive disintegration of aggregate particles, by dislodgement, from the surface downward or edges inward.

Resurfacing – Supplemental surface placed on existing pavement to improve surface conformation or increase strength.

Rigid base and Pavements – A term applied to that type of pavement that is constructed with Portland Cement Concrete. Those, which due to high bending resistance, distribute loads to foundations over comparatively large areas.

Rutting – The formation of longitudinal depressions by wheel tracking.

Scaling – The peeling away of the surface of Portland Cement Concrete.

Highway terms: (continued)

Scratch or Wedge Course – A course, separate from the binder course, placed on the base to overcome deficiencies as lack of or too much crown, or to adjust grade or super-elevation.

Settlement – The reduction in elevation of short sections of pavement or structures.

Shoving – The displacement of bituminous pavement due to the action of traffic, generally resulting in bulging of the surface.

Shoulder – A portion of the roadbed between the traffic lane and the top of the ditch in cuts and the top of the slope in embankments.

Spalling – The breaking or chipping of rigid pavement at joints, cracks or edges, usually resulting in fragments with feather edges.

Stripping – The separation of asphalt from aggregate particles due to the presence of moisture in asphalt pavements.

Sub-base – Specified or select material, of a planned thickness, placed as a foundation for pavement.

Subgrade – The material in cuts, fills and fill foundations immediately below the first layer of sub-bas, base ore pavement.

Subsealing or Undersealing – The placing of waterproof material under existing pavement to prevent the vertical flow of water or suspended solids that fill the voids under pavement.

Surface Course – The top course of a pavement providing a surface resistant to traffic abrasion or imparting structural value to pavement.

Surface Scale – A peeling away of the surface mortar of Portland Cement Concrete exposing sound concrete, even though the scale extends into the mortar surrounding coarse aggregate.

Surface Texture – The surface character of pavement that depends on size, shape, arrangement and distribution of aggregates and cement or binder.

Thrust – The pressure exerted by a rigid pavement against other pavements or structures.

Warping – The deviation of pavement surface from its original shape caused by temperature and moisture differentials within the slab.

Warping Joints – A joint permitting then warping of pavement slabs when moisture and temperature differentials occur in pavement, i.e., longitudinal or transverse joints with bonded steel or tie bars passing through them.

CONCRETE TERMS:

Admixtures – Materials other than cement, aggregate and water in concrete used or entrain air, retard setting or accelerate setting.

Anchorage – That portion of a reinforcing bar, and any attachment thereto, designed to resist pulling out or slipping of the bar when subjected to stress.
Concrete: (continued)

Bleeding – The natural separation of a liquid from a liquid-solid or semisolid mixture; for example, water from freshly poured concrete.

Concrete terms: (continued)

Consistency – The degree of solidity or fluidity of freshly mixed concrete and commonly described as slump.

Curing Period – A period provided to prevent the formation of surface cracks due to the rapid loss of water while the concrete is plastic and to ensure attainment of the specified strength.

Fineness Modulus – The fineness modulus (FM) is an index of the fineness of an aggregate – the higher the FM, the coarser the aggregate. FM is the summation of the cumulative percentages of the material retained on the standard sieves divided by 100.

Honeycomb – A surface or interior defect in a concrete mass characterized by the lack of mortar between the coarse aggregate particles.

Laitance – Weak material, consisting principally of lime, which is formed on the surface of concrete, especially when excess water is mixed with the cement.

Saturated Surface Dry – A term used to describe the condition of an aggregate in which the pores of all the particles are completely filled with water, but their surfaces are free from moisture.

Slump – A measure of concrete consistency.

Yield – The cubic feet of concrete produced per sack of cement.

ASPHALT TERMS:

Asphalt Cement – Fluxed or un-fluxed asphalt especially prepared for use in making bituminous pavements.

Batch – The quantity of mix discharged from the mixer in one complete operation of the plant before additional materials are introduced.

Bleeding – The presence of an excessive amount of asphalt on the surface due to either to an excessive amount of prime or tack coats or excessive asphalt in the mix.

C-Factor – Determined by the change in viscosity of asphalt cement during the mixing process relative to that during the Thin-Film Oven test and is used to determine whether incomplete combustion of or contamination by burner fuel is causing or could cause asphalt concrete pavement tenderness.

Cutback Asphalt – Asphalt cement that has been rendered liquid by fluxing with a petroleum distillate. (includes: RCs – Rapid Curing; MCs – Medium Curing; SCs – Slow Curing.)

Emulsion – An emulsion of asphalt cement and water with a small quantity of an emulsifying agent.

Prime Coat – The initial application of low viscosity liquid asphalt to an absorbent base prior to placing asphalt concrete.

Tack Coat – A thin layer of bitumen, road tar, or emulsion laid on a road to enhance adhesion of the course above it.

ASPHALT MIX DESIGN TERMS:

Volume Swell – The increase in volume of compacted aggregate, soil, sand, or a combination of aggregates passing the 10 mesh sieve (2.0 mm) and stabilized with bituminous material, when soaked in water for a standard length of time.

Acceptance Samples and Tests – These are samples taken and tests made to ascertain on a day-to-day basis whether the quality of the materials being incorporated or proposed for incorporation into the construction conform to the plans and specifications.

Air Voids – The total volume of the small pockets of air between the coated aggregate particles throughout a compacted paving mixture, expressed as a percent of the bulk volume of the compacted paving mixture.

Anti-Rutting Specification – Defined as a series of specifications to reduce rutting. It requires a minimum of 70% mechanical fracture on at least one face of the 4 mesh fraction of material, revised aggregate gradation specification to conform to maximum density gradation curve. It allows a 1.05 pay factor as an incentive to stay closer to maximum density line and maintain greater uniformity. The temperature of the mix upon discharge from all mixers including drum dryers id specified in the mix design memorandum. Also, a Quality Assurance Plan is required.

Coarse Aggregate Angularity – The percentage (by mass) of aggregates larger than 4 mesh (4.75 mm) with one or more fractured faces.

Final Record Samples and Tests – These samples and tests are taken at random from completed construction work or completed portions thereof. They are to provide an independent spot-check of the adequacy and the effectiveness of the results obtained in Acceptance sampling and testing and to supplement theses test results.

Fine Aggregate Angularity – The percent air voids present in loosely compacted aggregates smaller than No. 8 mesh (2.36 mm).

Flat and Elongated Particles – The percentage (by mass) of coarse aggregates that have a maximum to minimum dimension ratio greater than 5.

Immersion Compression – A method for measuring the loss of cohesion resulting from the action of water on compacted bituminous mixtures containing penetration graded asphalts.

Independent Assurance Samples and Tests – These are samples taken and tests made to provide an independent spot check of the adequacy and effectiveness of the results obtained in Acceptance sampling and testing and to supplement these test results. The samples are split in the field either into two or three portions that are tested by the field, district, or area, and the Materials Bureau in the case of a three-way split. These test results are used to compare testing procedures between the three laboratories.

Marshall Method of Asphalt Mix Design – A method that uses the measurement of resistance to plastic flow of cylindrical specimens of bituminous paving mixtures loaded on the lateral surface by means of the Marshall apparatus to achieve the following characteristics; sufficient asphalt, sufficient mix stability, sufficient voids and sufficient workability.

Marshall Stability – The stability measured during loading in the Marshall apparatus and is used to determine whether the compacted bituminous mixture will satisfy the demands of traffic without distortion or displacement.

Marshall Flow – The lateral deformation of the specimen at the point of maximum stability during loading in the Marshall apparatus, measured in hundredths of an inch and recorded as a whole number (0.15 inches becomes 15).

Asphalt Mix Design Terms: (continued)

Quality Assurance – Defined as a contractual method used to monitor the quality of material incorporated into Plant Mix Surfacing and Portland Cement Concrete Pavement, and in the case of Plant Mix Surfacing, the density of the finished pavement. This is achieved by random sampling and or testing of contractor produced materials that will be used to establish price adjustments on a statistical basis.

Sand Equivalent (Clay Content) – Clay content is the percentage of clay material contained in the aggregate fraction that is finer than a 4 mesh (4.75 mm) sieve.

Superpave™ – *Su*perior *Per*forming Asphalt *Pave*ments incorporates performance-based, asphalt materials characterization with the design environmental conditions to improve performance by controlling rutting, low temperature cracking and fatigue cracking.

Voids in the Mineral Aggregate (VMA) – The volume of intergranular void space between the aggregate particles of a compacted paving mixture that includes the air voids and the effective asphalt content, expressed as a percent of the total volume of the sample.

Voids Filled with Asphalt (VFA) – The percentage portion of the volume of intergranular void space between the aggregate particles that is occupied by the effective asphalt.

SYMBOLS:

The following are some of the more common symbols used in highway construction:

AASHTO - American Association of State Highway and Transportation Officials
AC - Asphalt Cement
ASTM - American Society for Testing Materials
BST - Bituminous Surface Treatment
BTB - Bituminous Treated Base
CAPAC - Corrugated Aluminum Pipe Arch Culvert
CAPC - Corrugated Aluminum Pipe Culvert
CSPAC - Corrugated Steel Pipe Arch Culvert
CSPC - Corrugated Steel Pipe Culvert
CTB - Cement Treated Base
FHPM - Federal-aid Highway Program Manual
FM - Fineness Modulus
FR - Final Record
HMA - Hot Mix Asphalt
IA - Independent Assurance
LTB - Lime Treated Base
MT - Montana Test
PC - Portland Cement
PCCP - Portland Cement Concrete Pavement
PG - Performance Grade
PMB - Plant Mix Base
PMS - Plant Mix Surfacing
PSI - Pounds Per Square Inch
QA - Quality Assurance
PCPAC - Reinforced Concrete Pipe Arch Culvert
RCPC - Reinforced Concrete Pipe Culvert
RMS - Road Mix Surfacing
SC - Seal Coat
SG - Specific Gravity
SPPAC - Structural (Sectional) Plate Pipe Arch Culvert
SPPC - Structural (Sectional) Plate Pipe Culvert

METHOD OF SAMPLING AND TESTING
MT 604-04
CONVERSION TABLES

Water:

7.5 gal. water	=	1 cu. ft.
1 cu. ft. water	=	62.4 lbs.
3785 cc water	=	1 gal.
8.32 lbs. Water @ 25°c	=	1 gal.
231 cu. in. water	=	1 gal.
1728 cu. in. water	=	1 cu. ft.

Volume Measurements:

1 cu. in.	=	0.000579 cu. ft.
1 cu. ft.	=	1728 cu. in.
1 cu. yd.	=	27 cu. ft.
1 cu. meter	=	35.31445 cu. ft.
1 cu. centimeter	=	0.0000353 cu. ft.

Weight Measurements:

1 oz.	=	28.35 grams		
1 lb.	=	453.59 grams	=	0.454 kilograms
1 oz.	=	0.0625 lbs.		
1 lb.	=	16 oz.		
1 kilogram	=	2.2 lb.	=	1000 grams

Length Measurements:

1 in.	=	0.0833 ft.	=	2.54 cm.
1 yd.	=	3 ft.	=	36 in.
1 rod	=	16.5 ft.	=	198 in.
1 chain	=	66 ft.	=	792 in.
1 mile	=	5280 ft.	=	1760 yd.
1 cm	=	0.032808 ft.	=	0.3937 in.

Area:

Circle	=	3.1416 x R5
1 sq. mile	=	640 acres
1 acre	=	43560 sq. ft.
1 sq. yd.	=	9 sq. ft.
1 sq. yd.	=	1296 sq. in.
1 sq. ft.	=	144 sq. in.

Estimated Equivalents:

1 cu. ft. concrete	=	150 lbs.
1 cu. ft. clay, undisturbed	=	110 lbs. dry; 135 lbs. wet
1 cu. ft. sand	=	100 lbs. loose; 115 lbs. consolidated
1 cu. yd. compacted clay	=	3500 lbs. (wet weight)
1 cu.yd. compacted stabilized gravel	=	3800 lbs.

cu. yds. x 1.9 = tons compacted stabilized gravel
1 mile x 1 ft. x 1 in. compacted stabilized gravel = 30.8 tons

Miscellaneous:

Multiply	by	To obtain
ft. per second	0.68182	miles per hour
miles per hour	88	feet per min.
pounds of water per min.	0.016021	cu. ft. per min.
cu. ft. per min.	0.12468	gal. per second

METHODS OF SAMPLING AND TESTING
MT 605-04
SAMPLES AND CERTIFICATIONS
(Montana Method)

1 Scope:

1.1 This procedure is intended as a general guide to assist in determining whether material designated for use on a highway project should be sampled or should be accepted on certification.

2 Referenced Documents:

2.1 ***MT Manual:***
MT 601 Materials Sampling, Testing and Acceptance Guide

3 Samples and Certifications:

3.1 In general, every item used must be sampled and an acceptance received before it can be incorporated into the work unless acceptance can be made based on the manufacturer's certification , field tests, or field inspection reports.

3.2 All major items to be sampled and tested and most items that may be accepted on the manufacturer's certification or label are listed in alphabetical order in MT-601 with instructions for sampling, testing, and acceptance.

4 Small Quantities:

4.1 Projects requiring only small quantities of materials may not require sampling and testing of certain items such as surfacing aggregates for projects under 500 tons, plant mix aggregate for projects under 500 tons, etc. MT- 601 covers most of the commonly used items included in this small quantity category.

5 Optional Samples:

5.1 Should there be any question relative to the quality or validity of a material or should the Project Manager wish to obtain more samples than the minimum required, he has the option to submit a s many additional samples as may be necessary to insure that specification material is being used. All materials incorporated into the project, whether represented by actual samples or certification, are subject to final field inspection and acceptance by the project Manager.

6 Official Samples:

6.1 Samples of material to be incorporated into the work must be either sampled by, or the sampling must be witnessed by, a representative of the engineer in order to be considered official samples.

7 Report Form:

7.1 Most major materials to be tested have a report form designed for their exclusive use. It is of the utmost importance that these forms be completed as fully as possible.

7.2 All other materials not covered by a particular report form, whether represented by a sample or a certification, must be accompanied by a ***miscellaneous report form No. 45.*** It is equally important that this report be fully completed. This form should show the name of the product, quantity involved, name and address of the manufacturer and / or supplier, etc. In the case of an acceptance on the basis of a certification, a remark must be made that no sample is being submitted and the acceptance is being made on the basis of pre-test, manufacturer's certification or label, Division Laboratory report, etc.

METHODS OF SAMPLING AND TESTING
MT 606-04
PROCEDURE FOR SELECTING SAMPLING LOCATIONS BY RANDOM SAMPLING TECHNIQUE

1 Scope:

1.1 The following is a method of selecting sampling locations of various materials from roadways and trucks hauling asphalt mixture.

2 Definitions:

2.1 *Lot* - a quantity of material that one desires to control. It may represent a day's production, a specified tonnage, a specified number of truckloads, a specified time period during production.

2.2 *Sample* - a segment of a lot chosen to represent the total lot. It may represent any number of sub-samples.

2.3 *Sub-sample* - a segment of a sample, taken from a unit of the lot, i.e., specified ton, a specified time, a specified truckload.

2.4 *Sample Unit* - a portion of sub-sample taken from a unit of a lot and combined with one or more other sample units to make up a sub-sample.

3 Selecting Sampling Locations from Roadways:

3.1 Table X-1, pages 5 to 8, contains random numbers for the general sampling procedures. To use this table for selecting locations for collecting samples, the following steps are necessary:

3.1.1 Determine the number of sampling locations within a section by selecting the maximum average longitudinal distance desired between samples and dividing the length of the section by the maximum average longitudinal distance.

3.1.2 Select a column of random numbers in Table X-1 by placing 28 one inch square pieces of cardboard, numbered 1 thru 28, into a container, shaking them to get them thoroughly mixed, and drawing out one.

3.1.3 Go to the column of Random Numbers identified with the number drawn from the container. In sub-column A, locate all numbers equal to and less than the number of sampling locations desired.

3.1.4 Multiply the total length of the section by the decimal values in sub-column B, found opposite the numbers located in sub-column A. Add the results to the station number at the beginning of the section to obtain the station of the sampling location.

3.1.5 Multiply the total width of the pavement in the section by the decimal values found in sub-column C, opposite the numbers in sub-column A, to obtain the offset distance from the left edge of the pavement to the sampling location.

4 Example:

4.1 Given: A completed plant mix surfacing project, 24 feet wide, 16,500 feet long, running from Station 100+00 to 265+00.

4 **Example:** (continued)

4.1.1 For sampling purposes it is desired to take one pavement core for each 2-lane mile. The number of sampling locations for this section, then are:

$$\frac{16{,}500}{5{,}280} = 3.1 = 3 \text{ locations}$$

4.1.2 The number 16 drawn from a container identifies this column of random numbers in Table X-1 to use.

4.1.3 The numbers selected from column 16 are:

Col. A	Col. B	Col. C
3	.548	.688
2	.739	.298
1	.331	.925

4.1.4 Station number of sampling location:

Length of Section, Feet	X	Col. B	=	Distance from Beginning of Section, Feet	+	Station at Beginning of section	=	Station Number of Sampling Location
16,500		.548		9042		100+00		190+42
16,500		.739		12190		100+00		221+90
26,500		.331		546		100+00		105+46

4.1.5 Offset distance from left edge of pavement to sampling location, feet.

Width of Pavement, Feet	x	Col. C	=	Offset Distance From Left Edge of Pavement to Sampling Location, Feet
24		.688		16.5
24		.298		7.2
24		.925		22.2

4.1.6 Sampling locations are:

Station Number	Distance Left	From Edge, Feet
190+42		16.5
221+90		7.2
105+46		22.2

5 **Selecting Sampling Locations in Trucks Hauling Asphalt Mixture:**

5.1 In this procedure, the following steps are necessary to select the sampling locations:

5 Selecting Sampling Locations in Trucks Hauling Asphalt Mixture: (continued)

5.1.1 Select lot size--it can be time (hours), an average day's production (tons), a selected tonnage [example: 2,000 tons (1815 mg)] or a selected number of truckloads. (A lot size of a day's production is recommended for this procedure as being convenient and easy to randomize.)

5.1.2 Select the number of samples desired per lot. One sample per lot, made up of *four* sub-samples, is the minimum recommended.

5.1.3 Select the number of locations in each truckload from which sampling units of asphalt mixtures will be taken to combine into one sub-sample. *Two* sampling units per sub-sample are recommended.

5.1.4 Assign each truckload of mixture in the lot a number, beginning with 1 for the first truckload and number them successively to the highest number in the lot. Find the truckload numbers for sampling by the following procedure:

5.1.4.1 Place consecutively numbered [1 through _____ one-inch (25 mm)] square pieces of cardboard, equal to the number of truckloads in the lot, into a container (such as a bowl). Mix them thoroughly before each drawing.

5.1.4.2 Draw a number of cardboard squares from the container equal to the number of sub-samples desired for the lot. The numerals on the cardboard squares will be the truckloads to be sampled.

5.1.5 Choose for each sub-sample desired the location in the truckload for each of the sampling units. Use the following steps:

5.1.5.1 Divide the truck beds into equal quadrants and number them 1 through 4 in any order desired.

5.1.5.2 Place four consecutively numbered [1 through 4, one-inch (25 mm)] square pieces of cardboard into a container (such as a bowl). Mix them thoroughly before each drawing.

5.1.5.3 Draw out an amount of cardboard squares equal to the number of sample units desired. The numerals on each square drawn represent the quadrants from which the sample will be taken. Replace the cardboard squares and repeat this step for each sample unit of each sub-sample to be taken.

Note - The principles involved may be applied to any other type of sampling of various materials which use the measurements of time, quantity, depth or other distinctive measurements of a construction phase. There are other random methods such as using a watch or deck of cards that are readily adaptable to obtaining roadway samples and they may be used provided the full benefit of obtaining random samples is accomplished.

MT-416

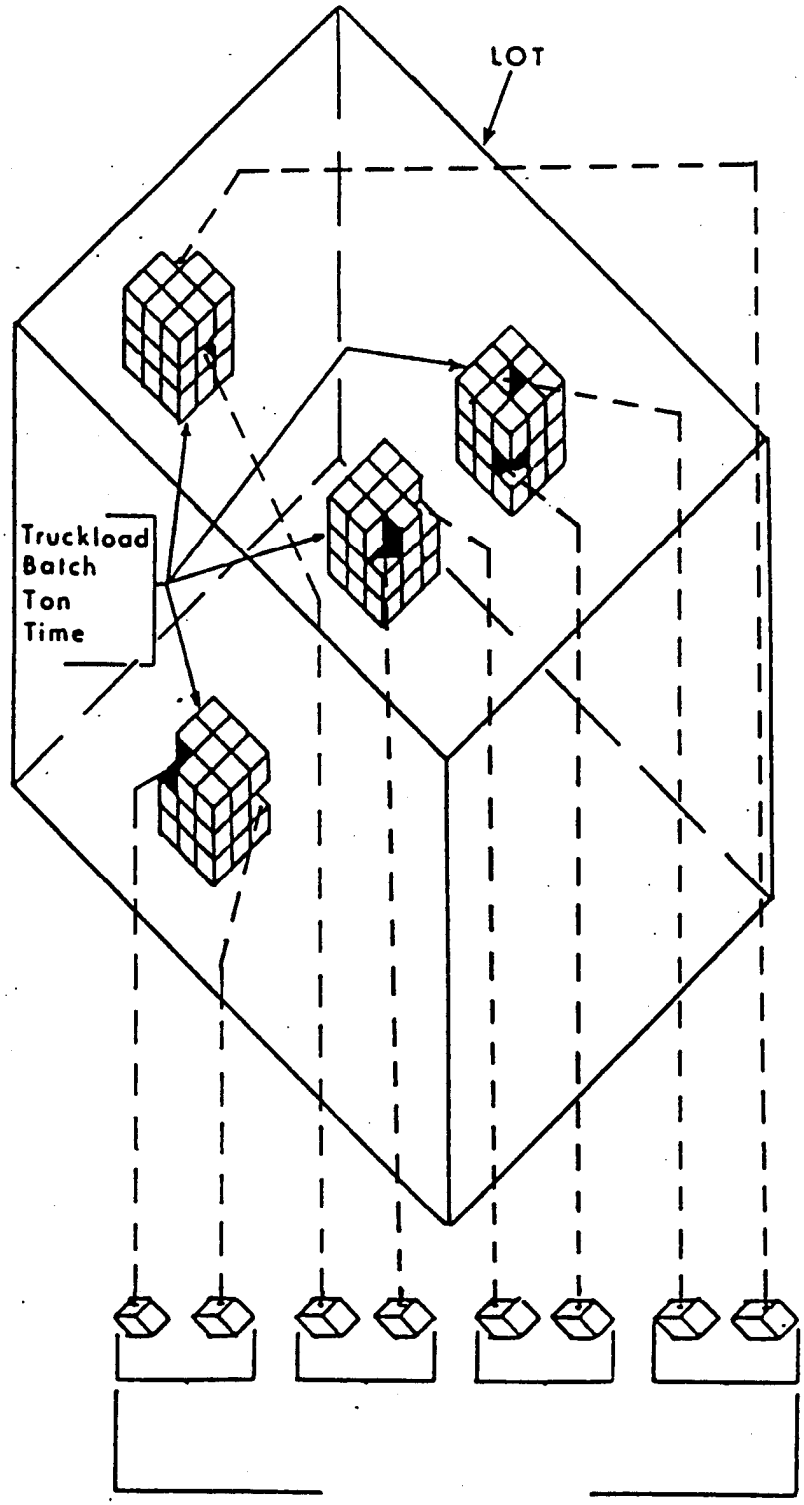

FIGURE 1—Schematic diagram illustrating *Lot, Sample, Subsample, and Sample Unit.*

TABLE X–1–RANDOM NUMBERS FOR GENERAL SAMPLING PROCEDURE

Col. No. 1			Col. No. 2			Col. No. 3			Col. No. 4			Col. No. 5			Col. No. 6			Col. No. 7		
A	B	C	A	B	C	A	B	C	A	B	C	A	B	C	A	B	C	A	B	C
15	.033	.576	05	.048	.879	21	.013	.220	18	.089	.716	17	.024	.863	30	.030	.901	12	.029	.386
21	.101	.300	17	.074	.156	30	.036	.853	10	.102	.330	24	.060	.032	21	.096	.198	18	.112	.284
23	.129	.916	18	.102	.191	10	.052	.746	14	.111	.925	26	.074	.639	10	.100	.161	20	.114	.848
30	.158	.434	06	.105	.257	25	.061	.954	28	.127	.840	07	.167	.512	29	.133	.388	03	.121	.656
24	.177	.397	28	.179	.447	29	.062	.507	24	.132	.271	28	.194	.776	24	.138	.062	13	.178	.640
11	.202	.271	26	.187	.844	18	.087	.887	19	.285	.899	03	.219	.166	20	.168	.564	22	.209	.421
16	.204	.012	04	.188	.482	24	.105	.849	01	.326	.037	29	.264	.284	22	.232	.953	16	.221	.311
08	.208	.418	02	.208	.577	07	.139	.159	30	.334	.938	11	.282	.262	14	.259	.217	29	.235	.356
19	.211	.798	03	.214	.402	01	.175	.641	22	.405	.295	14	.379	.994	01	.275	.195	28	.264	.941
29	.233	.070	07	.245	.080	23	.196	.873	05	.421	.282	13	.394	.405	06	.277	.475	11	.287	.199
07	.260	.073	15	.248	.831	26	.240	.981	13	.451	.212	06	.410	.157	02	.296	.497	02	.336	.992
17	.262	.308	29	.261	.087	14	.255	.374	02	.461	.023	15	.438	.700	26	.311	.144	15	.393	.488
25	.271	.180	30	.302	.883	06	.310	.043	06	.487	.539	22	.453	.635	05	.351	.141	19	.437	.655
06	.302	.672	21	.318	.088	11	.316	.653	08	.497	.396	21	.472	.824	17	.370	.811	24	.466	.773
01	.409	.406	11	.376	.936	13	.324	.585	25	.503	.893	05	.488	.118	09	.388	.484	14	.531	.014
13	.507	.693	14	.430	.814	12	.351	.275	15	.594	.603	01	.525	.222	04	.410	.073	09	.562	.678
02	.575	.654	27	.438	.676	20	.371	.535	27	.620	.894	12	.561	.980	25	.471	.530	06	.601	.675
18	.591	.318	08	.467	.205	08	.409	.495	21	.629	.841	08	.652	.508	13	.486	.779	10	.612	.859
20	.610	.821	09	.474	.138	16	.445	.740	17	.691	.583	18	.668	.271	15	.515	.867	26	.673	.112
12	.631	.597	10	.492	.474	03	.494	.929	09	.708	.689	30	.736	.634	23	.567	.798	23	.738	.770
27	.651	.281	13	.499	.892	27	.543	.387	07	.709	.012	02	.763	.253	11	.618	.502	21	.753	.614
04	.661	.953	19	.511	.520	17	.625	.171	11	.714	.049	23	.804	.140	28	.636	.148	30	.758	.851
22	.692	.089	23	.591	.770	02	.699	.073	23	.720	.695	25	.828	.425	27	.650	.741	27	.765	.563
05	.779	.346	20	.604	.730	19	.702	.934	03	.748	.413	10	.843	.627	16	.711	.508	07	.780	.534
09	.787	.173	24	.654	.330	22	.816	.802	20	.781	.603	16	.858	.849	19	.778	.812	04	.818	.187
10	.818	.837	12	.728	.523	04	.838	.166	26	.830	.384	04	.903	.327	07	.804	.675	17	.837	.353
14	.895	.631	16	.753	.344	15	.904	.116	04	.843	.002	09	.912	.382	08	.806	.952	05	.854	.818
26	.912	.376	01	.806	.134	28	.969	.742	12	.884	.582	27	.935	.162	18	.841	.414	01	.867	.133
28	.920	.163	22	.878	.884	09	.974	.046	29	.926	.700	20	.970	.582	12	.918	.114	08	.915	.538
03	.945	.140	25	.939	.162	05	.977	.494	16	.951	.601	19	.973	.327	03	.992	.399	25	.975	.584

(Continued) TABLE X–1–RANDOM NUMBERS FOR GENERAL SAMPLING PROCEDURE

Col. No. 8			Col. No. 9			Col. No. 10			Col. No. 11			Col. No. 12			Col. No. 13			Col. No. 14		
A	B	C	A	B	C	A	B	C	A	B	C	A	B	C	A	B	C	A	B	C
09	.042	.071	14	.061	.935	26	.038	.023	27	.074	.779	16	.073	.987	03	.033	.091	26	.035	.175
17	.141	.411	02	.065	.097	30	.066	.371	06	.084	.396	23	.078	.056	07	.047	.391	17	.089	.363
02	.143	.221	03	.094	.228	27	.073	.876	24	.098	.524	17	.096	.076	28	.064	.113	10	.149	.681
05	.162	.899	16	.122	.945	09	.095	.568	10	.133	.919	04	.153	.163	12	.066	.360	28	.238	.075
03	.285	.016	18	.158	.430	05	.180	.741	15	.187	.079	10	.254	.834	26	.076	.552	13	.244	.767
28	.291	.034	25	.193	.469	12	.200	.851	17	.227	.767	06	.284	.628	30	.087	.101	24	.262	.366
08	.369	.557	24	.224	.572	13	.259	.327	20	.236	.571	12	.305	.616	02	.127	.187	08	.264	.651
01	.436	.386	10	.225	.223	21	.264	.681	01	.245	.988	25	.319	.901	06	.144	.068	18	.285	.311
20	.450	.289	09	.233	.838	17	.283	.645	04	.317	.291	01	.320	.212	25	.202	.674	02	.340	.131
18	.455	.789	20	.290	.120	23	.363	.063	29	.350	.911	08	.416	.372	01	.247	.025	29	.353	.478
23	.488	.715	01	.297	.242	20	.364	.366	26	.380	.104	13	.432	.556	23	.253	.323	06	.359	.270
14	.496	.276	11	.337	.760	16	.395	.363	28	.425	.864	02	.489	.827	24	.320	.651	20	.387	.248
15	.503	.342	19	.389	.064	02	.423	.540	22	.487	.526	29	.503	.787	10	.328	.365	14	.392	.694
04	.515	.693	13	.411	.474	08	.432	.736	05	.552	.511	15	.518	.717	27	.338	.412	03	.408	.077
16	.532	.112	20	.447	.893	10	.476	.468	14	.564	.357	28	.524	.998	13	.356	.991	27	.440	.280
22	.557	.357	22	.478	.321	03	.508	.774	11	.572	.306	03	.542	.352	16	.401	.792	22	.461	.830
11	.559	.620	29	.481	.993	01	.601	.417	21	.594	.197	19	.585	.462	17	.423	.117	16	.527	.003
12	.650	.216	27	.562	.403	22	.687	.917	09	.607	.524	05	.695	.111	21	.481	.838	30	.531	.486
21	.672	.320	04	.566	.179	29	.697	.862	19	.650	.572	07	.733	.838	08	.560	.401	25	.678	.360
13	.709	.273	08	.603	.758	11	.701	.605	18	.664	.101	11	.744	.948	19	.564	.190	21	.725	.014
07	.745	.687	15	.632	.927	07	.728	.498	25	.674	.428	18	.793	.748	05	.571	.054	05	.797	.595
30	.780	.285	06	.707	.107	14	.745	.679	02	.697	.674	27	.802	.967	18	.587	.584	15	.801	.927
19	.845	.097	28	.737	.161	24	.819	.444	03	.767	.928	21	.826	.487	15	.604	.145	12	.836	.294
26	.846	.366	17	.846	.130	15	.840	.823	16	.809	.529	24	.835	.832	11	.641	.298	04	.854	.982
29	.861	.307	07	.874	.491	25	.863	.568	30	.838	.294	26	.855	.142	22	.672	.156	11	.884	.928
25	.906	.874	05	.880	.828	06	.878	.215	13	.845	.470	14	.861	.462	20	.674	.887	19	.886	.832
24	.919	.809	23	.931	.659	18	.930	.601	08	.855	.524	20	.874	.625	14	.752	.881	07	.929	.932
10	.952	.555	26	.960	.365	04	.954	.827	07	.867	.718	30	.929	.056	09	.774	.560	09	.932	.206
06	.961	.504	21	.978	.194	28	.963	.004	12	.881	.722	09	.935	.582	29	.921	.752	01	.970	.692
27	.969	.811	12	.982	.183	19	.988	.020	23	.937	.872	22	.947	.797	04	.959	.099	23	.973	.082

(Continued) TABLE X–1–RANDOM NUMBERS FOR GENERAL SAMPLING PROCEDURE

Col. No. 15			Col. No. 16			Col. No. 17			Col. No. 18			Col. No. 19			Col. No. 20			Col. No. 21		
A	B	C	A	B	C	A	B	C	A	B	C	A	B	C	A	B	C	A	B	C
15	.023	.979	19	.062	.588	13	.045	.004	25	.027	.290	12	.052	.075	20	.030	.881	01	.010	.946
11	.118	.465	25	.080	.218	18	.086	.878	06	.057	.571	30	.075	.493	12	.034	.291	10	.014	.939
07	.134	.172	09	.131	.295	26	.126	.990	26	.059	.026	28	.120	.341	22	.043	.893	09	.032	.346
01	.139	.230	18	.136	.381	12	.128	.661	07	.105	.176	27	.145	.689	28	.143	.073	06	.093	.180
16	.145	.122	05	.147	.864	30	.146	.337	18	.107	.358	02	.209	.957	03	.150	.937	15	.151	.012
20	.165	.520	12	.158	.365	05	.169	.470	22	.128	.827	26	.272	.818	04	.154	.867	16	.185	.455
06	.185	.481	28	.214	.184	21	.244	.433	23	.156	.440	22	.299	.317	19	.158	.359	07	.227	.277
09	.211	.316	14	.215	.757	23	.270	.849	15	.171	.157	18	.306	.475	29	.304	.615	02	.304	.400
14	.248	.348	13	.224	.846	25	.274	.407	08	.220	.097	20	.311	.653	06	.369	.633	30	.316	.074
25	.249	.890	15	.227	.809	10	.290	.925	20	.252	.066	15	.348	.156	18	.390	.536	18	.328	.799
13	.252	.577	11	.280	.898	01	.323	.490	04	.268	.576	16	.381	.710	17	.403	.392	20	.352	.288
30	.273	.088	01	.331	.925	24	.352	.291	14	.275	.302	01	.411	.607	23	.404	.182	26	.371	.216
18	.277	.689	10	.399	.992	15	.361	.155	11	.297	.589	13	.417	.715	01	.415	.457	19	.448	.754
22	.372	.958	30	.417	.787	29	.374	.882	01	.358	.305	21	.472	.484	07	.437	.696	13	.487	.598
10	.461	.075	08	.439	.921	08	.432	.139	09	.412	.089	04	.478	.885	24	.446	.546	12	.546	.640
28	.519	.536	20	.472	.484	04	.467	.266	16	.429	.834	25	.479	.080	26	.485	.768	24	.550	.038
17	.520	.090	24	.498	.712	22	.508	.880	10	.491	.203	11	.566	.104	15	.511	.313	03	.604	.780
03	.523	.519	04	.516	.396	27	.632	.191	28	.542	.306	10	.576	.659	10	.517	.290	22	.621	.930
26	.573	.502	03	.548	.688	16	.661	.836	12	.563	.091	29	.665	.397	30	.556	.853	21	.629	.154
19	.634	.206	23	.597	.508	19	.675	.629	02	.593	.321	19	.739	.298	25	.561	.837	11	.634	.908
24	.635	.810	21	.681	.114	14	.680	.890	30	.692	.198	14	.749	.759	09	.574	.599	05	.696	.459
21	.679	.841	02	.739	.298	28	.714	.508	19	.705	.445	08	.756	.919	13	.613	.762	23	.710	.078
27	.712	.366	29	.792	.038	06	.719	.441	24	.709	.717	07	.798	.183	11	.698	.783	29	.726	.585
05	.780	.497	22	.829	.324	09	.735	.040	13	.820	.739	23	.834	.647	14	.715	.179	17	.749	.916
23	.861	.106	17	.834	.647	17	.741	.906	05	.848	.866	06	.837	.978	16	.770	.128	04	.802	.186
12	.865	.377	16	.909	.608	11	.747	.205	27	.867	.633	03	.849	.964	08	.815	.385	14	.835	.319
29	.882	.635	06	.914	.420	20	.850	.047	03	.883	.333	24	.851	.109	05	.872	.490	08	.870	.546
08	.902	.020	27	.958	.856	02	.859	.356	17	.900	.443	05	.859	.935	21	.885	.999	28	.871	.539
04	.951	.482	26	.981	.976	07	.870	.612	21	.914	.483	17	.863	.220	02	.958	.177	25	.971	.369
02	.977	.172	07	.983	.624	03	.916	.463	29	.950	.753	09	.863	.147	27	.961	.980	27	.984	.252

(Continued) TABLE X—1—RANDOM NUMBERS FOR GENERAL SAMPLING PROCEDURE

Col. No. 22			Col. No. 23			Col. No. 24			Col. No. 25			Col. No. 26			Col. No. 27			Col. No. 28		
A	B	C	A	B	C	A	B	C	A	B	C	A	B	C	A	B	C	A	B	C
12	.051	.032	26	.051	.187	08	.015	.521	02	.039	.005	16	.026	.102	21	.050	.952	29	.042	.039
11	.068	.980	03	.053	.256	16	.068	.994	16	.061	.599	01	.033	.886	17	.085	.403	07	.105	.293
17	.089	.309	29	.100	.159	11	.118	.400	26	.068	.054	04	.088	.686	10	.141	.624	25	.115	.420
01	.091	.371	13	.102	.465	21	.124	.565	11	.073	.812	22	.090	.602	05	.154	.157	09	.126	.612
10	.100	.709	24	.110	.316	18	.153	.158	07	.123	.649	13	.114	.614	06	.164	.841	10	.205	.144
30	.121	.744	18	.114	.300	17	.190	.159	05	.126	.658	20	.136	.576	07	.197	.013	03	.210	.054
02	.166	.056	11	.123	.208	26	.192	.676	14	.161	.189	05	.138	.228	16	.215	.363	23	.234	.533
23	.179	.529	09	.138	.182	01	.237	.030	18	.166	.040	10	.216	.565	08	.222	.520	13	.266	.799
21	.187	.051	06	.194	.115	12	.283	.077	28	.248	.171	02	.233	.610	13	.269	.477	20	.305	.603
22	.205	.543	22	.234	.480	03	.286	.318	06	.255	.117	07	.278	.357	02	.288	.012	05	.372	.223
28	.230	.688	20	.274	.107	10	.317	.734	15	.261	.928	30	.405	.273	25	.333	.633	26	.385	.111
19	.243	.001	21	.331	.292	05	.337	.844	10	.301	.811	06	.421	.807	28	.348	.710	30	.422	.315
27	.267	.990	08	.346	.085	25	.441	.336	24	.363	.025	12	.426	.583	20	.362	.961	17	.453	.783
15	.283	.440	27	.382	.979	27	.469	.786	22	.378	.792	08	.471	.708	14	.511	.989	02	.460	.916
16	.352	.089	07	.387	.865	24	.473	.237	27	.379	.959	18	.473	.738	26	.540	.903	27	.461	.841
03	.377	.648	28	.411	.776	20	.475	.761	19	.420	.557	19	.510	.207	27	.587	.643	14	.483	.095
06	.397	.769	16	.444	.999	06	.557	.001	21	.467	.943	03	.512	.329	12	.603	.745	12	.507	.375
09	.409	.428	04	.515	.993	07	.610	.238	17	.494	.225	15	.640	.329	29	.619	.895	28	.509	.748
14	.465	.406	17	.518	.827	09	.617	.041	09	.620	.081	09	.665	.354	23	.623	.333	21	.583	.804
13	.499	.651	05	.539	.620	13	.641	.648	30	.623	.106	14	.680	.884	22	.624	.076	22	.587	.993
04	.539	.972	02	.623	.271	22	.664	.291	03	.625	.777	26	.703	.622	18	.670	.904	16	.689	.339
18	.560	.747	30	.637	.374	04	.668	.856	08	.651	.790	29	.739	.394	11	.711	.253	06	.727	.298
26	.575	.892	14	.714	.364	19	.717	.232	12	.715	.599	25	.759	.386	01	.790	.392	04	.731	.814
29	.756	.712	15	.730	.107	02	.776	.504	23	.782	.093	24	.803	.602	04	.813	.611	08	.807	.983
20	.760	.920	19	.771	.552	29	.777	.548	20	.810	.371	27	.842	.491	19	.843	.732	15	.833	.757
05	.847	.925	23	.780	.662	14	.823	.223	01	.841	.726	21	.870	.435	03	.844	.511	19	.896	.464
25	.872	.891	10	.924	.888	23	.848	.264	29	.862	.009	28	.906	.367	30	.858	.299	18	.916	.384
24	.874	.135	12	.929	.204	30	.892	.817	25	.891	.873	23	.948	.367	09	.929	.199	01	.948	.610
08	.911	.215	01	.937	.714	28	.943	.190	04	.917	.264	11	.956	.142	24	.931	.263	11	.976	.799
07	.946	.065	25	.974	.398	15	.975	.962	13	.958	.990	17	.993	.989	15	.939	.947	24	.978	.633

METHODS OF SAMPLING AND TESTING
MT 607-04
PROCEDURE FOR REDUCING FIELD SAMPLES OF AGGREGATE TO TESTING SIZE
(*Modified AASHTO T 248*)

1 Scope

1.1 These methods cover the reduction of field samples of aggregate to the appropriate size for testing, and applies to fine aggregate (FA), coarse aggregate (CA), and mixes of the two, and employ techniques that are intended to minimize variations in measured characteristics between the test samples and the field sample.

Note 1 – Under certain circumstances, reduction in size of the field sample prior to testing is not recommended. Substantial differences between the selected test samples sometimes cannot be avoided, as for example, in the case of an aggregate having relatively few large size particles in the field sample. The laws of chance dictate that these few particles may be unequally distributed among the reduced size test samples. Similarly, if the test sample is being examined for certain contaminants occurring as a few discrete fragments in only small percentages, caution should be used in interpreting results from the reduced size test sample. Chance inclusion or exclusion of only one or two particles in the selected sample may importantly influence interpretation of the characteristics of the field sample. In these cases, the entire field sample should be tested.

2 Referenced Documents

AASHTO
R 76 Reducing Samples of Aggregate to Testing Size

MT Materials Manual
MT 201 Sampling Roadway Materials
MT 204 Specific Gravity and Absorption of Fine Aggregate

3 Selection of Method

3.1 *Fine Aggregates* – Field samples of fine aggregate (FA) that are drier than the saturated-surface-dry (SSD) condition (Note 2) shall be reduced to test size by a mechanical splitter according to Method A. Field samples of FA that are wetter than SSD may be reduced to test size by quartering according to Method B, or the entire field sample may be dried to drier than SSD, using temperatures that do not exceed those specified for any of the tests contemplated, and then reduced to test sample size using Method A.

3.1.1 Field samples of fine aggregate wetter than SSD may be reduced to testing size by treatment as a miniature stockpile as described in Method C.

3.1.2 If a moist field sample is very large, a preliminary split may be made by quartering according to Method B to reduce the sample to not less than 5000 g, the portion obtained is then dried and reduced to test sample size using Method A.

3.1.3 Mixtures of FA and CA that are wetter than SSD shall be reduced to test sample size according to Method B.

Note 2 – The method of determining the saturated-surface-dry condition is described in paragraph 5.2 of MT 204. As a quick approximation, if the fine aggregate will retain its shape when molded in the hand, it may be considered to be wetter than saturated-surface-dry.

3.2 Coarse Aggregate – Use of a mechanical splitter in accordance with Method A is preferred, however, the field sample may be reduced by quartering in accordance with Method B.

4 Field Sample Size

4.1 The size of the field sample shall conform to paragraph 3 of MT 201.

METHOD A – MECHANICAL SPLITTER

5 Apparatus

5.1 *Sample Splitter* – Sample splitters shall have an even number of equal width chutes, but not less than a total of eight for coarse aggregate or twelve for fine aggregate which discharge alternately to each side of the splitter. The minimum width of the individual chutes shall be approximately 50 percent larger than the largest particles in the sample to be split (Table 1). The splitter shall be equipped with two receptacles to hold the two halves of the sample following splitting. It shall also be equipped with a hopper or straight-edged pan, which has a width equal to or slightly less than the overall width of the assembly of chutes by which the sample may be fed at a controlled rate to the chutes. The splitter and accessory equipment shall be so designed that the sample will flow smoothly without restriction or loss of material.

Table 1

Size Passing - 100%	Splitter Opening
2 in.	3 in. or 6 bars
1½ in.	2¼ in. or 6 bars
1 in.	1½ in. or 3 bars
¾ in.	1½ in. or 3 bars
½ in.	¾ in. or 2 bars
⅜ in.	9/16 in. or 2 bars
4M	½ in. or 1 bar

Each bar = ½ inch

Example – When splitting 1½ inch Crushed Base Course, the total sample would require 2¼ inches or 6 bars and the minus 4M would require ½ inch or 1 bar.

6 Procedure

6.1 Place the field sample in the hopper or pan and uniformly distribute it from edge to edge, so that when it is introduced into the chutes, approximately equal amounts will flow through each chute. (Note 3). The rate at which the sample is introduced shall be such as to allow free flowing through the chutes into the receptacles below. Reintroduce the portion of the sample in one of the receptacles into the splitter as many times as necessary to reduce the sample to the size specified for the intended test. The portion of the material collected in the other receptacle may be reserved for reduction in size for other tests.

Note 3 – A sample splitter that has a hopper equipped with a dumping device may be filled and leveled with a straightedge prior to dumping into the chutes. A sample splitter that has a free-flowing hopper shall be filled by a container, which has a width equal to or slightly less than the overall width of the assembly of chutes. The side of the container shall be placed against the edge of the hopper and dumped in a single motion into the hopper. In no case shall the material be poured into the hopper from the end of the container, scoop, or shovel.

METHOD B – QUARTERING

7 Apparatus

7.1 The apparatus shall consist of a straightedge, scoop, shovel, or trowel; a broom or brush; and a canvas blanket approximately 6 x 8 ft (2 x 2.5 m).

8 Procedure

8.1 Place the field sample on a hard, clean, level surface where there will be neither loss of material nor the accidental addition of foreign material. Mix the material thoroughly by turning the entire sample over three times. With the last turning, shovel the entire sample into a conical pile by depositing each shovelful on top of the preceding one. Carefully flatten the conical pile to a uniform thickness and diameter by pressing down the apex with a shovel so that each quarter sector of the resulting pile will contain the material originally in it. The diameter should be approximately four to eight times the thickness. Divide the flattened mass into four equal quarters with a shovel or trowel and remove two diagonally opposite quarters, including all fine material, and brush the cleared spaces clean. Successively mix and quarter the remaining material until the sample is reduced to the desired size.

8.2 As an alternate method when the floor surface is uneven, the field sample may be placed on a canvas blanket and mixed with a shovel as described above or by alternately lifting each corner of the canvas and pulling it over the sample toward the diagonally opposite corner causing the material to be rolled. Flatten the pile as described in paragraph 8.1. Divide the sample as also described in paragraph 8.1 or if the surface beneath the blanket is uneven, insert a stick or pipe beneath the blanket and under the center of the pile, then lift both ends of the stick dividing the sample into two equal parts. Remove the stick leaving a fold of the blanket between the divided portions. Insert the stick under the center of the pile at right angles to the first division and again lift both ends of the stick, dividing the sample into four equal parts. Remove two diagonally opposite quarters, being careful to clean the fines from the blanket. The remaining two quarters shall be successively remixed and quartered until the sample is reduced to the desired size.

METHOD C – MINIATURE STOCKPILE SAMPLING

9 Apparatus

9.1 The apparatus shall consist of a small sampling thief, small scoop, or spoon.

10 Procedure

10.1 Place the field sample on a hard, clean, level, non-absorbent surface. Thoroughly mix the sample and form a miniature stockpile. Obtain a sample for each test by selecting at least five increments of material at random locations from the miniature stockpile, using any of the devices described in paragraph 9.

MONTANA HIGHWAY DEPARTMENT
MATERIALS DIVISION
MT 608-04

VOIDS TABLE

Percent Voids $\frac{SG \times 6.7.355 - wt.}{SG \times 62.3555} \times 100$

Voids shown to the nearest one-tenth (1/10)

S.G.	2.55	2.26	2.57	2.58	2.59	2.60	2.61	2.62	2.63	2.64	2.65	2.66	2.67	2.68	2.69	2.70
Wt/Ft^3																
90	43.4	43.6	43.9	44.1	44.3	44.5	44.7	44.9	45.1	45.3	45.5	45.7	45.9	46.1	46.3	46.5
91	42.8	43.0	43.2	43.4	43.6	43.9	44.1	44.3	44.5	44.7	44.9	45.1	45.3	45.5	45.7	45.9
92	42.1	42.4	42.6	42.8	43.0	43.2	43.5	43.7	43.9	44.1	44.3	44.5	44.7	44.9	45.1	45.4
93	41.6	41.7	42.0	42.2	42.4	42.6	42.9	43.1	43.3	43.6	43.7	43.9	44.1	44.3	44.5	44.8
94	40.9	41.1	41.3	41.6	41.8	42.0	42.2	42.5	42.7	42.9	43.1	43.3	43.5	43.7	44.0	44.2
95	40.2	40.5	40.7	40.9	41.2	41.4	41.6	41.8	42.1	42.3	42.5	42.7	42.9	43.1	43.4	43.6
96	39.6	39.9	40.1	40.3	40.6	40.8	41.0	41.2	41.5	41.7	41.9	42.1	42.3	42.5	42.8	43.0
97	39.0	39.2	39.5	39.7	39.9	40.2	40.4	40.6	40.8	41.1	41.3	41.5	41.7	42.0	42.2	42.4
98	38.4	38.6	38.8	39.1	39.3	39.5	39.8	40.0	40.2	40.5	40.7	40.9	41.1	41.4	41.6	41.8
99	37.7	38.0	38.2	38.5	38.7	38.9	39.2	39.4	39.6	39.9	40.1	40.3	40.5	40.8	41.0	41.2
100	37.1	37.4	37.6	37.8	38.1	38.3	38.6	38.8	39.0	39.2	39.5	39.7	39.9	40.2	40.4	40.6
101	36.5	36.7	37.0	37.2	37.5	37.7	37.9	38.2	38.4	38.6	38.9	39.1	39.3	39.6	39.8	40.0
102	35.8	36.1	36.3	36.6	36.8	37.1	37.3	37.6	37.8	38.0	38.3	38.5	38.7	39.0	39.2	39.4
103	35.2	35.5	35.7	36.0	36.2	36.5	36.7	36.9	37.2	37.4	37.7	37.9	38.1	38.4	38.6	38.8
104	34.6	34.8	35.1	35.3	35.6	35.8	36.1	36.3	36.6	36.8	37.1	37.3	37.5	37.8	38.0	38.2
105	34.0	34.2	34.5	34.7	35.0	35.2	35.5	35.7	36.0	36.2	36.5	36.7	36.9	37.2	37.4	37.6
106	33.3	33.6	33.8	34.1	34.4	34.6	34.9	35.1	35.4	35.6	35.8	36.1	36.3	36.6	36.8	37.0
107	32.7	33.0	33.2	33.5	33.7	34.0	34.2	34.5	34.8	35.0	35.2	35.5	35.7	36.0	36.2	36.4
108	32.1	32.3	32.6	32.9	33.1	33.4	33.6	33.9	34.1	34.4	34.6	34.9	35.1	35.4	35.6	35.8
109	31.4	31.7	32.0	32.2	32.6	32.8	33.0	33.3	33.5	33.8	34.0	34.3	34.5	34.8	35.0	35.3
110	30.8	31.1	31.4	31.6	31.9	32.1	32.4	32.7	32.9	33.2	33.4	33.7	33.9	34.2	34.4	34.7
111	30.2	30.5	30.7	31.0	31.3	31.5	31.8	32.1	32.3	32.6	32.8	33.1	33.3	33.6	33.8	34.1
112	29.6	29.8	30.1	30.4	30.6	30.9	31.2	31.4	31.7	32.0	32.2	32.5	32.7	33.0	33.2	33.5

$$Percent\ Solids = \frac{Wt/Ft3}{SGx62.4} x100$$

METHODS OF SAMPLING AND TESTING
MT 609-16
FIELD NUMBERING CONCRETE CYLINDERS
(MONTANA METHOD)

1 Scope

1.1 The procedure outlined in this method has been adopted in order to establish a uniform, statewide numbering system for concrete test specimens and entry of specimens in MDT's SiteManager.

2 Terminology

2.1 Definitions

2.1.1 *Lot* – A single day's pour or every 200 yd^3 (150 m^3) of concrete poured, whichever is less, excluding Class Pave. A lot of Class Pave is a single day's pour or every 1,000 yd^3 (750 m^3) of concrete poured, whichever is less.

2.2.2 *Test* – A set of four (4) cylinders for Compressive Strength testing.

3 Specimen Number Procedure

3.1 Each concrete cylinder for an entire project will have its own unique specimen number.

3.2 Specimen numbers are to contain the Lot# (L), the Test# (T), and the Cylinder# in this format: L#T#_Cylinder# (e.g., L4T1_1, L4T1_2, etc). Cylinder numbers are to be in continuous consecutive order for each class of concrete for the entire project.

3.3 Example

3.3.1 Project A has a 24 yd^3 pour on day 1. Cylinders from this pour would be Lot 1 and Specimen Numbers for day 1 would be L1T1_1-4.

3.3.2 Project A has a much larger pour on day 2. The first 200 yd^3 poured would be Lot 2. Assuming 4 Tests in Lot 2, Lot 2 will have 16 cylinders. Specimen Numbers for Lot 2 would be L2T1_5-8, L2T2_9-12, L2T3_13-16, and L2T4_17-20.

Note 1 – A Cylinder# for Compressive Strength testing for a specific class of concrete should never be repeated. If 300 cylinders are cast for a specific class of concrete for a project, the cylinders should be numbered 1 through 300.

4 SiteManager Sample Record Procedure

4.1 Generate one (1) SiteManager Sample Record for each Lot of cylinders cast. The Sample Record can contain as many as four Tests (four (4) sets of four (4) cylinders) for Compressive Strength testing. A unique Sample Record is not required for each Test that is in the same Lot. Enter the following data to generate a Sample Record:

a. Sample ID: Assigned by Site Manager
b. Sample Date: The date the concrete was sampled in the field (not the logged date)
c. Sample Type: Project Acceptance
d. Acceptance Method: Test Results
e. Material Code: Concrete Class Code (i.e., General, Pave, Pre, SCC, Deck, etc.)
f. Witnessed by: Self explanatory
g. Producer/Supplier: Supplier of the concrete (e.g., 99-FOSSUMR-SUPP for Fossum Ready Mix)
h. QPL/PIT/MILL: Source of aggregate (e.g., 42-031010 for Fossum Ready Mix (Belzer) pit)

i. Qualified Product Name: Leave blank
j. District/Area: Self explanatory
k. Contract Descr: Contract ID and Job Name
l. Specimen Number(s): As described in Section 3 (e.g., L1T1-4_1-16)
m. Intended Use: Describe use and location sample represents

Save Sample Record.

4.2 Navigate to the Addt'l Sample Data tab. Enter data into Specimen Number(s) field, if blank. The Specimen Number(s) should match the Specimen Number(s) on the Basic Sample Data tab. Enter Control Type "Lot Number" then enter the Lot# in the Number box and Save.

4.3 Navigate to the Contract tab and attach appropriate Contract Number. Enter the Represented Quantity for the item associated with that sample (e.g. yd^3 of concrete or yd^2 of sidewalk) and Save.

4.4 Navigate to the Tests tab. Attach a Concrete Properties test template for each sample tested for concrete properties in this Lot, whether or not it is was tested with the cylinders. The Sample Test Number (Sample Test Nbr) should match the Test# entered in the Specimen Number box on the Basic Sample Data tab when applicable. Enter the Received Date, Actual Start Date, and Actual Completion Date in the fields displayed in the bottom right hand corner. These dates need to be filled in by the inspector for each test template attached and should be the same date as the Sample Date shown on the Basic Sample Data tab.

Note 2 – For each test template, ensure that the User ID of the personnel actually performing the testing is listed as the Tester.

5 Split Loads

5.1 On multiple structure jobs where one load of concrete is split and placed on more than one structure on the project, one set of test specimens will suffice, providing the split load of concrete is not altered in any way such as delaying successive pours, introducing additional water into the mix, etc.

6 Marking Sides of Cylinder

6.1 All identifying markings on concrete cylinders shall be placed on the sides of the cylinder instead of, or in addition to, markings being placed on the ends. Markings on the cylinders are to include at a minimum:

- Full Sample ID assigned by SiteManager.
- Specimen Number as described in Section 3.
- Sample Date.

Note 3 – If necessary, concrete cylinders, upon arriving at the Materials Bureau, are immediately capped on both ends. If field personnel place the identifying numbers on the end of the cylinders only, it is necessary for the Materials Bureau to transfer the identifying numbers to the side of the cylinder before it is capped, as the original information will be covered by the caps. Transferring information increases the potential for errors.

METHODS OF SAMPLING AND TESTING
MT 610-04
METHOD OF NUMBERING SUBGRADE MATERIAL, SURFACING MATERIAL, BITUMINOUS TREATED MATERIAL AND LIQUID ASPHALT
(Montana Method)

1 Scope:

1.1 This method is intended to standardize the procedure in assigning field numbers to subgrade, surfacing, bituminous treated material and liquid asphalt.

2 Field Numbering Procedure:

2.1 Sample numbers shall run consecutively throughout the project for each type and size of material. This must be repeated for each new source of material used on the project. Only one set of consecutive numbers is needed for contracts which involve two or more projects. All projects shall be listed, however, and the project for which the material is designated shall be indicated with a check mark.

3 Sub-grade Material:

3.1 In the case of sub-grade, each type of material would mean original ground, embankment, pipe bedding, ramp, etc. Numbering shall be as outlined in paragraph 2.

4 Surfacing Material (Crushed Top Surfacing, Crushed Base Course, etc.):

4.1 Samples shall be numbered in accordance with paragraph 2.

5 Plant Mix Surfacing, Plant Mix Base, Road Mix Surfacing, Bituminous Surface Treatment and Bituminous Treated Base:

5.1 In addition to samples of surfacing aggregates, samples of bituminous mixtures, as prepared for use in paving, shall be numbered as outlined in paragraph 2.

6 Liquid Asphalt:

6.1 Samples shall be numbered in accordance with paragraph 2. When switching to a liquid asphalt produced by a different company or to a different grade of liquid asphalt, the numerical sequence must return to number one. Refer to MT 601 for sample size and frequency of sampling.

6.2 When sampling liquid asphalt, sample numbers and lot numbers will run consecutively. If the manufacturer changes and the grade remains the same, the sample numbers will start over but the lot numbers will continue. If the grade of asphalt changes, the sample number and lot number will both start over.

Example 1:

Manufacturer	**Grade**		
MRC	PG 64-22	Sample No. 1 – 24	Lot No. 1 – 4
EXXON	PG 64-22	Sample No. 1 – 12	Lot No. 5 – 6
MRC	PG 64-28	Sample No. 1 – 18	Lot No. 1 – 3
MRC	PG 64-22	Sample No. 25 – 37	Lot NO. 7 - 8

METHODS OF SAMPLING AND TESTING
MT 611-04
A GUIDE TO LABORATORY FORMS
(Montana Form Nos.)

1 Scope:

1.1 This is a guide for the selection of the proper laboratory form when submitting samples, inspection reports, or certifications to the Materials Bureau.

2 General:

2.1 The following listing is given in two parts. Part I is used when submitting materials for testing. Part II tells which forms to use when submitting inspection reports or certifications for various types of materials. Each of these parts is further broken down into different classes of material (aggregate, asphalt, steel, etc.). Following each individual item is the number of the laboratory form to be used.

PART I

FORMS TO ACCOMPANY SAMPLES

Soil and Aggregates

Bedding Material - MBA 123
Blending Sand - MBA 123
Blotter Material - MBA 123
Binder - MBA 123 Steel
Borrow - MBA 123
Concrete Aggregate - MBA 124A
Crushed Base Course - MBA 123
Crushed Cover Aggregate - MBA 123
Crushed Top Surfacing - MBA 123
Cushion - MBA 123 Cement
Filter Material - MBA 123
Mineral Filler - MBA 123
Plant Mix Base Course - MBA 123
Plant Mix Surfacing - MBA 123
Proposed Surfacing - MBA 123
Proposed Concrete – MBA 124A
Sand Surfacing - MBA 123
Selected Surfacing - MBA 123
Soil and Water for Corrosion - 45
Soil for "R" Value - MBA 123
Topsoil - MBA 123 Protective

Asphalt Seed

All asphaltic materials will be
submitted on the following laboratory
forms; Wood
QA projects - CB-57 Wood
Non QA projects and maintenance - 10I-C

Steel Products

Reinforcing Bars - 45
Pre-stress Strand - 45
Wire Mesh - 45
Pipe - 45

Miscellaneous Materials

Bark - MBA 123
Canvas Shims - 45
- 55
Conduit - 45
Delineators - 45
Electrical Wire - 45
Expansion Joint Filler - 45
Fencing Items - 45
Glass Beads - 45
Mulch - 45
Paint - 45
Peat Moss - 45
Plastic Pipe - 45
Coating - 45
Riprap - 45
- 45
Signing Material - 45
U-posts - 45
Wood Cores - 45
Preservatives - 45
Products - 45

Bituminous Mixtures

Plant Mix Material for Extraction - 45
Plant Mix Material for Monitoring - 45
Plant Mix Pavement - 45
Concrete

Concrete Samples

Concrete Cores - 45
Concrete Cylinders - 93
Concrete Cylinders (AR) - 77
Flexural Beams - 93

PART II

FORMS FOR INSPECTION AND CERTIFICATION

Certifications

Contractor's Certification of Compliance: Non-Structural Steel & Iron Items – Form 406
Contractor's Certification of Compliance: Miscellaneous Items – Form 407
All certifications of materials should be accompanied by Lab. Form No. 46

Inspection Reports

Corrugated Metal Pipe Culvert and Misc. Culvert Items - 102
Field Nuclear Density Tests - MBF 1000A
Pre-cast Concrete Items (Culverts, Barrier Rail, etc.) - 19A
Pre-stress Beam Inspection Report - 48
Pre-stress Beam Pre-tensioning Record - BR-12
Steel and Misc. Structural Materials
1) Fabrication Inspection - MB-2
2) Field Inspection - MBF 46
Welding Inspection
1) Pre-fabrication Welding - WI-1
2) Fabrication Welding - WI-2
3) Final Welding - WI-3
4) Miscellaneous Welding - WI-4
Wood Products - 45