T-3, alligator cracking

R-1, secondary crack

T-2, edge crack

T-1, overview

A2-A, overview

A-8, overview

A-6, settlement

A-5, drain with gap

T-4, local failure

A-7, overview

A-3A, bleeding & sealed crack

BAKER

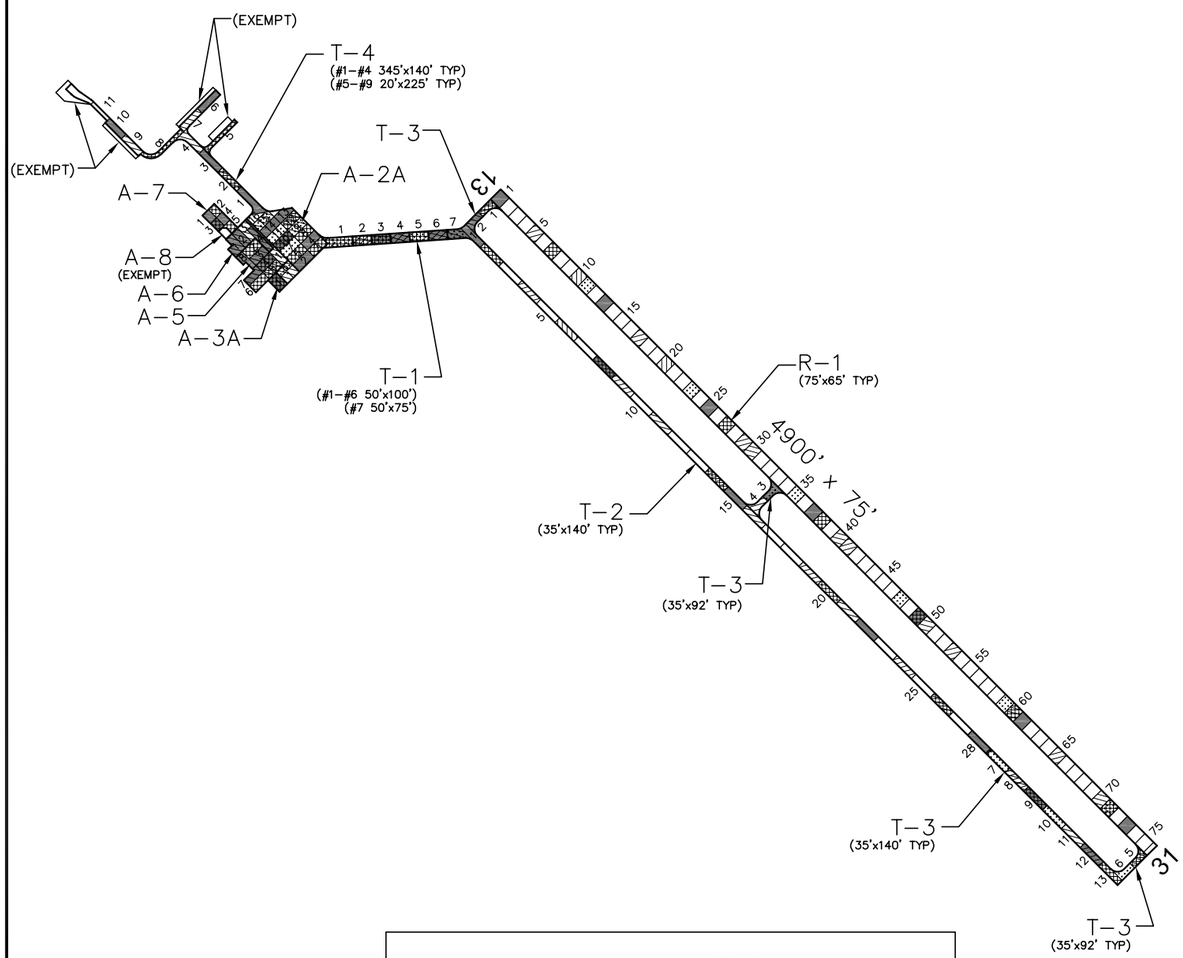

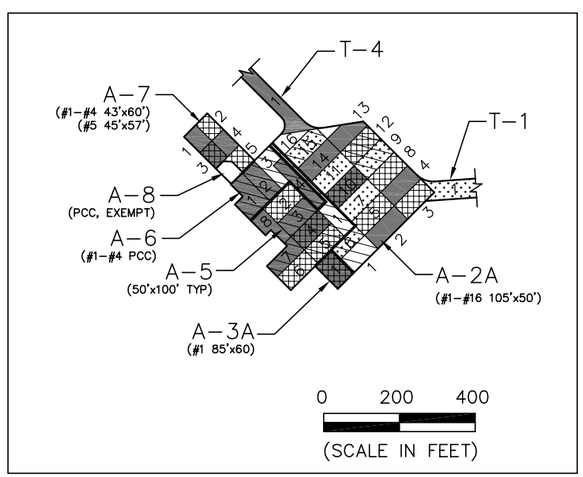

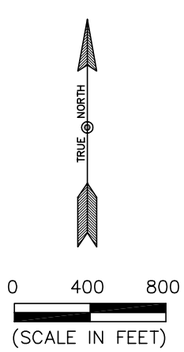

PAVEMENT STRENGTH SURVEY/PAVEMENT CONDITION SURVEY

BAKER

PAVE. IDENT.	SOIL CLASS	SUB GRADE CLASS	SUBBASE COURSE	BASE COURSE	SURFACE COURSE	OVERLAY	PAVEMENT STRENGTH MAX. GROSS LOAD (LBS) SINGLE	DUAL	DUAL TAN.	REMARKS
RUNWAYS										
R-1			12" COMPACTED	10" P-208+	5" P-401		17,500			3 4 6 7
			SUBGRADE+	12" CEMENT						
			35" SAND	TREATED SAND						
TAXIWAYS										
T-1				11" P-208	2" P-401	3" P-401	12,500			2 4 6 7
T-2				6" AGG.	P-609/2"RM	3" P-401	12,500			2 4 6 7
T-3				11" P-208	2"P-401/P-609	4.5" P-401	12,500			4 6 7
T-4			GEOGRID 18" P-153	GEOTEXTILE FABRIC 16" P-208	4" P-401					5 7
APRONS										
A-2A				11" P-208	2" P-401	5.25" P-401	12,500			2 5 7
A-3A			FILTER FABRIC	6" AGG	P-609/2" RM	P-609,5.25"P-401				2 5 7
A-5			GEOGRID 18" P-153	GEOTEXTILE FABRIC 16" P-208	4" P-401					5 7
A-6			GEOGRID 22" P-153	GEOTEXTILE FABRIC 8" P-208	8" P-501					5 7
A-7			GEOGRID 18" P-153	GEOTEXTILE FABRIC 16" P-208	4" P-401					6
A-8					_" P-501					7

REMARKS:

1. 1971, RM = ROAD MIX
2. AIP-02, 1988, CONSTRUCT PARTIAL PARALLEL TAXIWAY.
3. AIP-03, 1992, RECONSTRUCT PORTION OF RUNWAY.
4. AIP-04, 1993, RECONSTRUCT PORTION OF RUNWAY, REHABILITATE PARALLEL TAXIWAY, AND WIDEN CONNECTING TAXIWAY.
5. AIP-06, 1996, RECONSTRUCT PORTION OF APRON, OVERLAY APRON, AND CONSTRUCT TAXIWAY.
6. AIP-07, 2001, OVERLAY RUNWAY 13-31 AND TAXIWAYS, CONSTRUCT APRON (A-7).
7. AIP-008, 2003, CRACK SEAL; CONSTRUCT CONCRETE APRON (A-8).

LEGEND

- 1994 SURVEY AREA
- 1997 SURVEY AREA
- 2000 SURVEY AREA
- 2003 SURVEY AREA
- 2006 SURVEY AREA

DATE OF PAVEMENT STRENGTH SURVEY:	SEPT. 8, 1988
EVALUATED BY:	J. STYBA
DATE OF MOST RECENT PAVEMENT CONDITION SURVEY:	JULY 17, 2006
EVALUATED BY:	B. BURKLAND

MONTANA AVIATION SYSTEM PLAN
2006 UPDATE - PAVEMENT CONDITION INDEXES

BAKER MUNICIPAL

PREPARED FOR: MONTANA AERONAUTICS DIVISION

BAKER
MONTANA

DATE: NOV. 2006

PREPARED BY: ROBERT PECCIA & ASSOCIATES