BIG TIMBER

7/19/06

T-4, surface detail with voids

A-2, surface detail with bleeding

T-1, overview

A-1, overview

BIG TIMBER

7/19/06

T-2, depressions

T-5, scrapes

R-1, overview

R-2, overview

BIG TIMBER

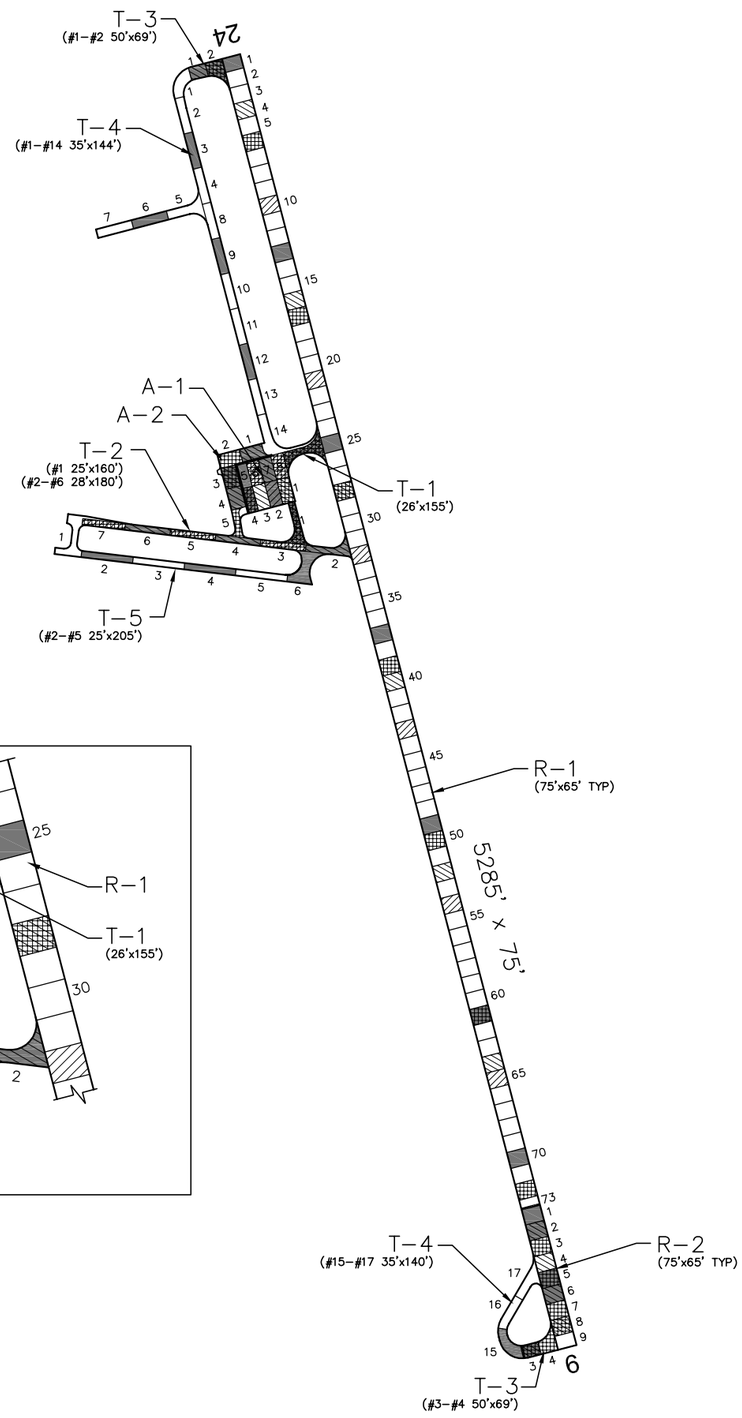

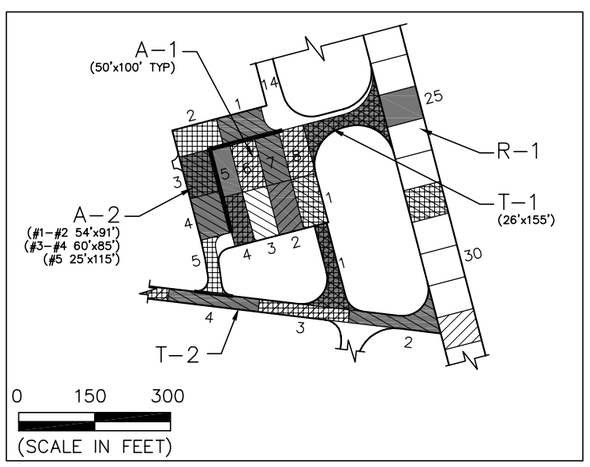

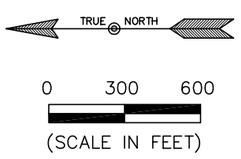

PAVEMENT STRENGTH SURVEY/PAVEMENT CONDITION SURVEY

BIG TIMBER

PAVE. IDENT.	SOIL CLASS	SUB GRADE CLASS	SUBBASE COURSE	BASE COURSE	SURFACE COURSE	OVERLAY	PAVEMENT STRENGTH MAX. GROSS LOAD (LBS) SINGLE	DUAL	DUAL TAN.	REMARKS
RUNWAYS										
R-1	E-7	F5	6" COMP. SUBGRADE	6" P-208, 3.5" P-207	2.5" P-401	P-609	12,500			1 2
R-2			P-154	4" P-208	2.5" P-401	P-609	12,500			1 2
TAXIWAYS										
T-1	E-7	F5	6" COMP. SUBGRADE	4" P-208	2.5" P-401	P-609	12,500			1 2
T-2					UNKNOWN	2"P-401,P-609	12,500			1 2
T-3			P-154	4" P-208	2.5" P-401	P-609	12,500			1 2
T-4	CBR=12		30" P-154	6" P-208	4" P-401		12,500			2
T-5	CBR=12		30" P-154	6" P-208	4" P-401		12,500			2
APRONS										
A-1	E-7	F5	6" COMP. SUBGRADE	4" P-208	2.5" P-401	P-609	12,500			1 2
A-2			P-154	4" P-208	2.5" P-401	P-609	12,500			1 2

REMARKS:

FROST, POOR DRAINAGE

AIP-01, 1984

1 AIP-02, 1996 RECONSTRUCT AND EXTEND RUNWAY 6-24, RECONSTRUCT TAXIWAY (T-1), CONSTRUCT CONNECTING TAXIWAY, OVERLAY TAXIWAY (T-2), AND RECONSTRUCT APRON.

2 AIP-03, 2003, CONSTRUCT PARTIAL PARALLEL TAXIWAY, JUGHANDLE TURNAROUND (T-4), AND HANGAR ACCESS TAXIWAYS (T-5). FOG SEAL AND REMARK REMAINING PAVEMENTS.

LEGEND

- 1994 SURVEY AREA
- 1997 SURVEY AREA (NOT SURVEYED)
- 2000 SURVEY AREA
- 2003 SURVEY AREA
- 2006 SURVEY AREA

DATE OF PAVEMENT STRENGTH SURVEY:	SEPT. 22, 1987
EVALUATED BY:	C. NEW
DATE OF MOST RECENT PAVEMENT CONDITION SURVEY:	JULY 19, 2006
EVALUATED BY:	B. BURKLAND

MONTANA AVIATION SYSTEM PLAN
2006 UPDATE - PAVEMENT CONDITION INDEXES

BIG TIMBER AIRPORT

PREPARED FOR: MONTANA AERONAUTICS DIVISION

BIG TIMBER MONTANA

DATE: NOV. 2006

PREPARED BY: ROBERT PECCIA & ASSOCIATES