CULBERTSON

7/11/06

R-1, surface detail with cracks

R-2, surface detail

T-2, overview

A-1, overview with failed sealant

CULBERTSON

7/11/06

T-1, surface detail with void

T-1, surface detail

CULBERTSON

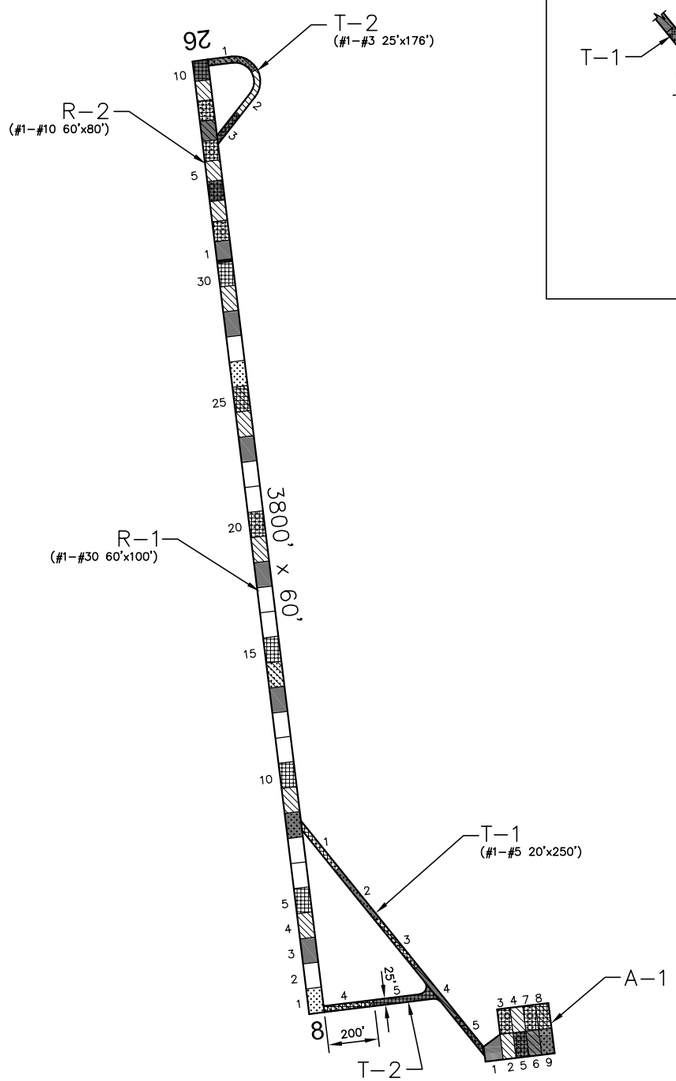

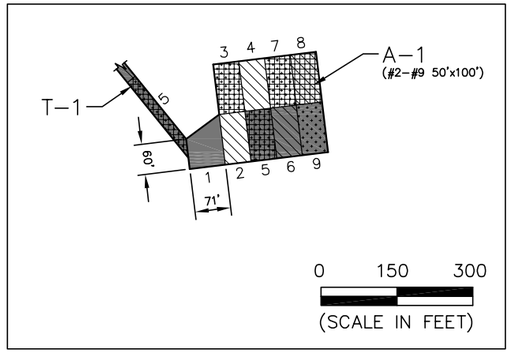

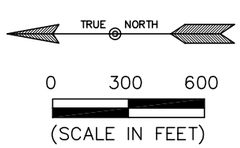

PAVEMENT STRENGTH SURVEY/PAVEMENT CONDITION SURVEY

PAVE. IDENT.	SOIL CLASS	SUB GRADE CLASS	SUBBASE COURSE	BASE COURSE	SURFACE COURSE	OVERLAY	PAVEMENT STRENGTH MAX. GROSS LOAD (LBS) SINGLE	DUAL	DUAL TAN.	REMARKS
RUNWAYS										
R–1	E–7	F7		8" P–208	P–609,1.5"AC	1.5"P–401,P–609	12,500			<1<3
R–2		CBR=5		8" P–208	3" P–401		12,500			<2<3
TAXIWAYS										
T–1	E–7	F7		8" P–208	P–609,1.5"AC	1.5"P–401,P–609	12,500			<1<3
T–2		CBR=5		8" P–208	3" P–401		12,500			<2<3
APRONS										
A–1	E–7	F7,CBR=5		8" P–208	P–609,1.5"AC	1.5"P–401,P–609	12,500			<1<3

REMARKS:

1> ADAP–01, 1976, OVERLAY RUNWAY, CONNECTING TAXIWAY, AND APRON.

2> AIP–02, 1993, ALL PAVEMENTS OVERLAYED, RUNWAY WIDENDED AND EXTENDED, AND NEW TAXIWAY (T–2) CONSTRUCTED. PAVEMENT STRENGTH UPDATED PER DESIGN REPORT.

3> AIP–03, 2001, CRACK SEAL, FOG SEAL, AND REMARK ALL PAVEMENTS.

LEGEND

- 1994 SURVEY AREA (NOT SURVEYED)
- 1997 SURVEY AREA
- 2000 SURVEY AREA
- 2003 SURVEY AREA
- 2006 SURVEY AREA

DATE OF PAVEMENT STRENGTH SURVEY:	SEPT. 22, 1983
EVALUATED BY:	C. NEW
DATE OF MOST RECENT PAVEMENT CONDITION SURVEY:	JULY 11, 2006
EVALUATED BY:	B. BURKLAND

MONTANA AVIATION SYSTEM PLAN
2006 UPDATE - PAVEMENT CONDITION INDEXES

BIG SKY FIELD

PREPARED FOR: MONTANA AERONAUTICS DIVISION ORO Y PLATA

CULBERTSON MONTANA

DATE: NOV. 2006

PREPARED BY: ROBERT PECCIA & ASSOCIATES

CULBERTSON