ENNIS

7/20/06

T-1, rutting

R-1, surface detail with crack & depression

A-2, crack, failed sealant & depression

R-1, overview

ENNIS

7/20/06

T-2, overview

T-2, surface detail

T-1, patch

A-1, crack & depression

ENNIS

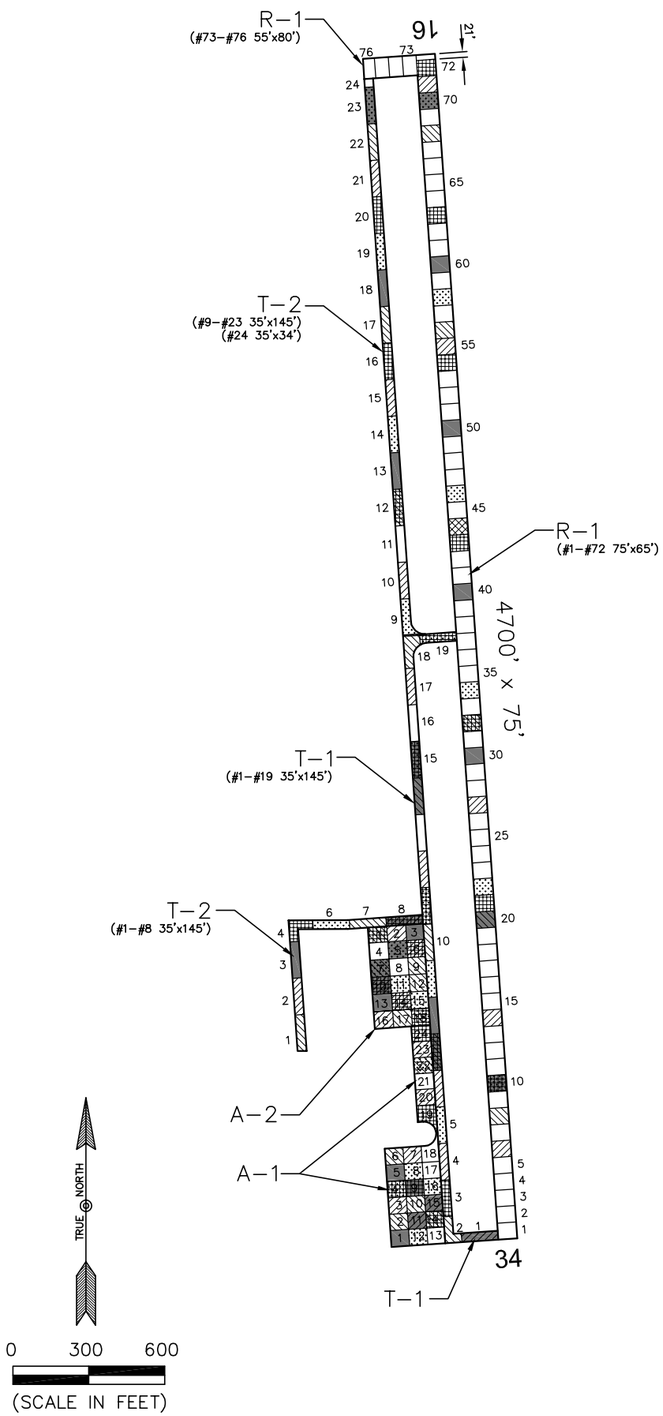

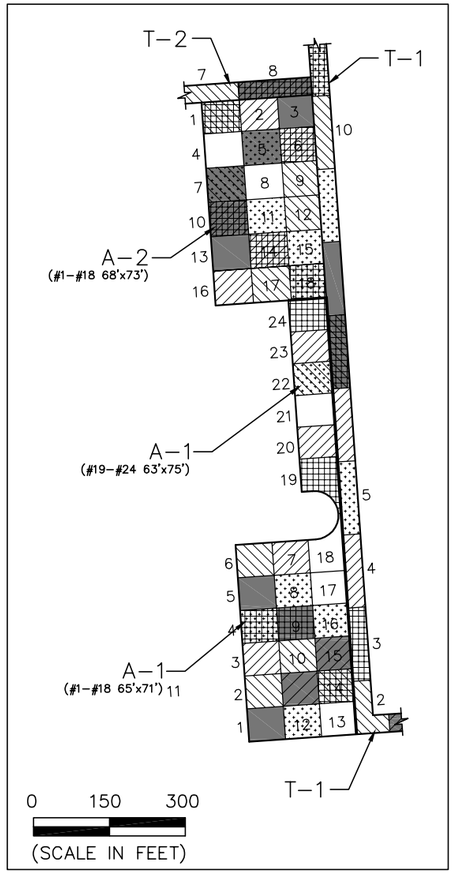

PAVEMENT STRENGTH SURVEY/PAVEMENT CONDITION SURVEY

ENNIS

PAVE. IDENT.	SOIL CLASS	SUB GRADE CLASS	SUBBASE COURSE	BASE COURSE	SURFACE COURSE	OVERLAY	PAVEMENT STRENGTH MAX. GROSS LOAD (LBS) SINGLE	DUAL	DUAL TAN.	REMARKS
RUNWAYS										
R–1	CBR=4			8" P–208	3" P–401	P–609	12,500			1 3
TAXIWAYS										
T–1	CBR=4			8" P–208	3" P–401	P–609	12,500			1 3
T–2			P–152	8" P–208	3" P–401	P–609	12,500			2 3
APRONS										
A–1	CBR=4			8" P–208	3" P–401	P–609	12,500			1 3
A–2			P–152	8" P–208	3" P–401	P–609	12,500			2 3

REMARKS:

1 AIP–02, 1990, ALL NEW CONSTRUCTION.
2 AIP–03, 1992, CONSTRUCT PARALLEL TAXIWAY EXTENSION, APRON AND ACCESS TAXIWAY.
3 AIP–05, 2001, CRACK SEAL, FOG SEAL, AND REMARK ALL PAVEMENTS.

LEGEND

- 1994 SURVEY AREA
- 1997 SURVEY AREA
- 2000 SURVEY AREA
- 2003 SURVEY AREA
- 2006 SURVEY AREA

DATE OF PAVEMENT STRENGTH SURVEY:	MAR. 12, 1990
EVALUATED BY:	S. DALTON
DATE OF MOST RECENT PAVEMENT CONDITION SURVEY:	JULY 20, 2006
EVALUATED BY:	B. BURKLAND

MONTANA AVIATION SYSTEM PLAN
2006 UPDATE - PAVEMENT CONDITION INDEXES

ENNIS - BIG SKY AIRPORT

PREPARED FOR: MONTANA AERONAUTICS DIVISION ORO Y PLATA

ENNIS
MONTANA

DATE: NOV. 2006

PREPARED BY: ROBERT PECCIA & ASSOCIATES