FORT BENTON

7/15/06

T-2, surface detail with popout

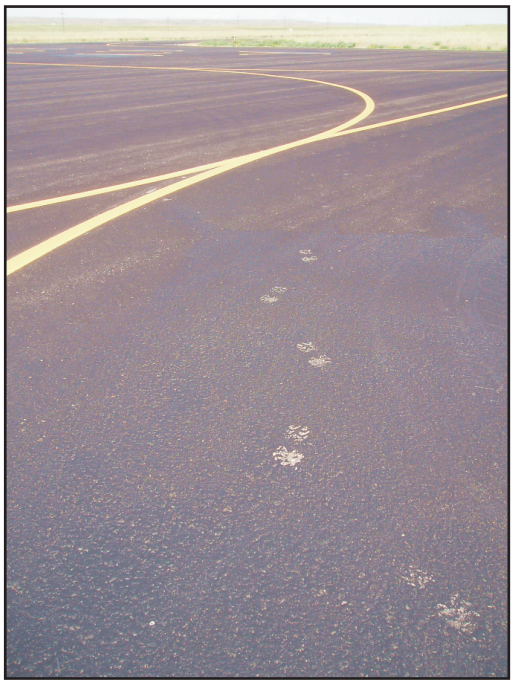

A-1, overview

T-1, overview

T-3, surface detail with alligator cracks

FORT BENTON

7/15/06

T-3, crack & scrape

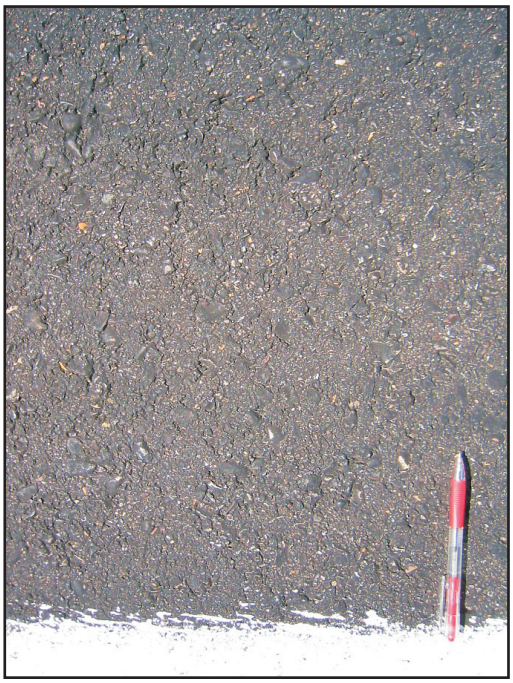

R-1, surface detail

R-1, overview

FORT BENTON

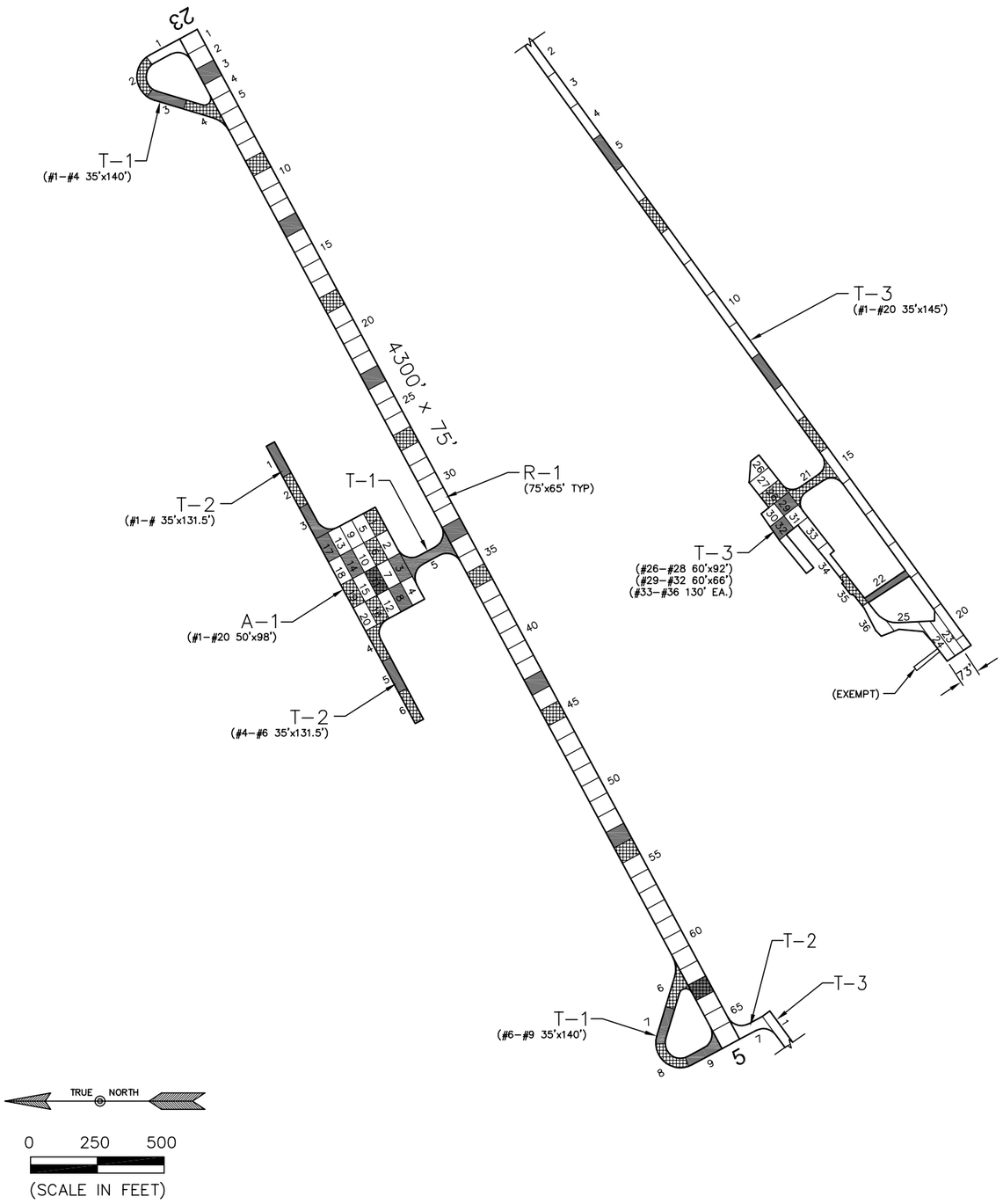

PAVEMENT STRENGTH SURVEY/PAVEMENT CONDITION SURVEY

PAVE. IDENT.	SOIL CLASS	SUB GRADE CLASS	SUBBASE COURSE	BASE COURSE	SURFACE COURSE	OVERLAY	PAVEMENT STRENGTH MAX. GROSS LOAD (LBS) SINGLE	DUAL	DUAL TAN.	REMARKS
RUNWAYS										
R-1		CBR=9	6" COMP. P-152 & FILTER FABRIC	6" P-208	3" P-401	P-609	12,500			2 3
TAXIWAYS										
T-1		CBR=9	6" COMP. P-152 & FILTER FABRIC	6" P-208	3" P-401	P-609	12,500			2 3
T-2		CBR=9	6" COMP. P-152 & FILTER FABRIC	6" P-208	3" P-401	P-609	12,500			2 3
T-3				8" AGG	3" AC		12,500			1
APRONS										
A-1		CBR=9	6" COMP. P-152 & FILTER FABRIC	6" P-208	3" P-401	P-609	12,500			2 3

REMARKS:

1. ORIGINAL AIRPORT CONSTRUCTION, PLUS SEVERAL REHABILITATION PROJECTS.
2. AIP-03, 1999, ALL NEW CONSTRUCTION.
3. AIP-004, 2005, CRACK SEAL, FOG SEAL, AND REMARK.

LEGEND

- 1994 SURVEY AREA (NOT SURVEYED)
- 1997 SURVEY AREA (NOT SURVEYED)
- 2000 SURVEY AREA (NOT SURVEYED)
- 2003 SURVEY AREA
- 2006 SURVEY AREA

DATE OF PAVEMENT STRENGTH SURVEY:	
EVALUATED BY:	
DATE OF MOST RECENT PAVEMENT CONDITION SURVEY:	JULY 15, 2006
EVALUATED BY:	B. BURKLAND

MONTANA AVIATION SYSTEM PLAN
2006 UPDATE - PAVEMENT CONDITION INDEXES

FORT BENTON AIRPORT

PREPARED FOR: MONTANA AERONAUTICS DIVISION ORO Y PLATA

FORT BENTON
MONTANA

DATE: NOV. 2006

PREPARED BY: ROBERT PECCIA & ASSOCIATES

FORT BENTON