POLSON

7/26/06

R-11, overview

R-11, surface detail

T-11, overview with cracks

T-11, surface detail

POLSON

7/26/06

A-11, surface detail with oil spill & crack

T-12, overview with skin patch

T-14, overview

POLSON

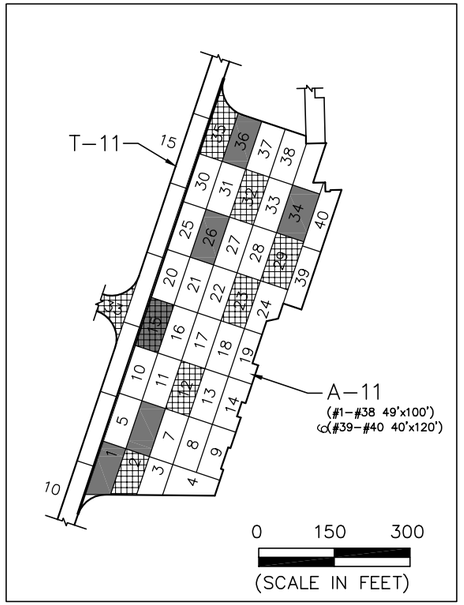

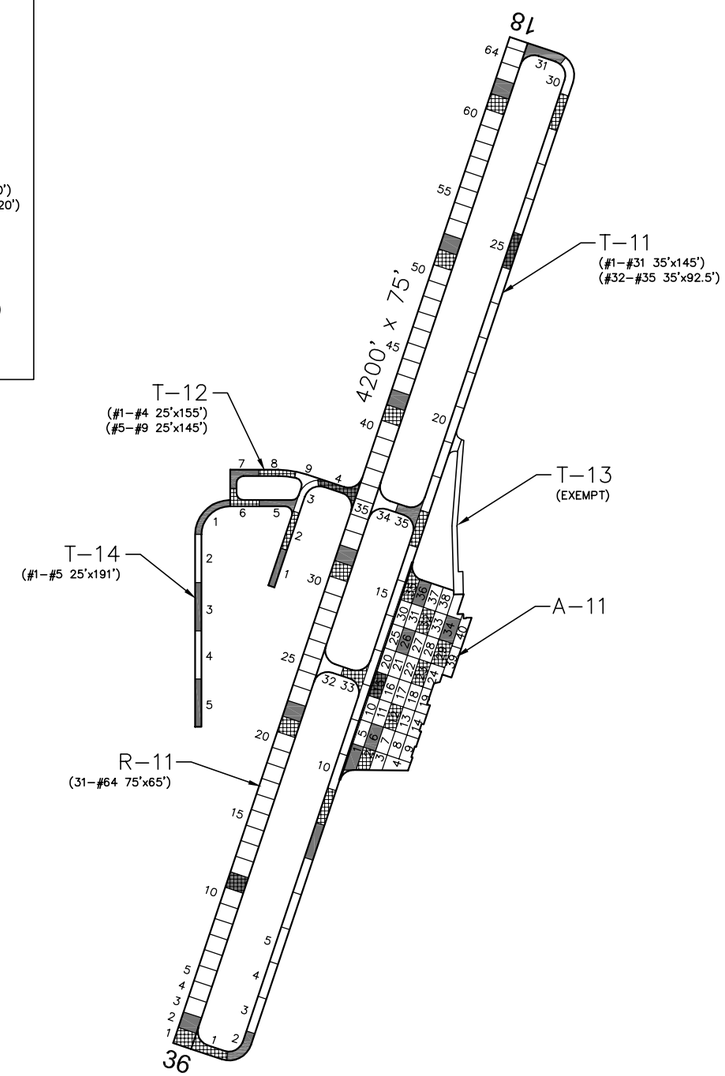

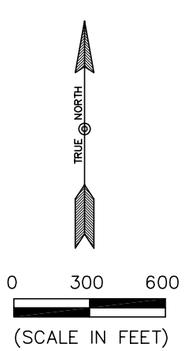

PAVEMENT STRENGTH SURVEY/PAVEMENT CONDITION SURVEY

PAVE. IDENT.	SOIL CLASS	SUB GRADE CLASS	SUBBASE COURSE	BASE COURSE	SURFACE COURSE	OVERLAY	PAVEMENT STRENGTH MAX. GROSS LOAD (LBS) SINGLE	DUAL	DUAL TAN.	REMARKS
RUNWAYS										
R–11	E–6	F6,CBR=4	9" CMP P–152 W/FILTER FABRIC	13" P–207/P–208	3" P–401		12,500			1
TAXIWAYS										
T–11	E–6	F6,CBR=4	FILTER FABRIC	13" P–208	3" P–401		12,500			2
T–12	E–6	F6,CBR=4	FILTER FABRIC	13" P–208	3" P–401		12,500			2
T–13				UNKNOWN						
T–14	E–6		FILTER FABRIC	12" P–208	3" P–401		12,500			3
APRONS										
A–11	E–6	F6,CBR=4		12" P–207/P–208	3" P–401		12,500			1

REMARKS:

FAAP–01, 1966

AIP–01, 1983, OVERLAY AND EXTEND RUNWAY 18–36, CONSTRUCT TURNAROUNDS. OVERLAY AND EXPAND CONNECTING TAXIWAY AND APRON.

1 AIP–02, 1998, REHABILITATE AND WIDEN RUNWAY, REHABILITATE CONNECTING TAXIWAY AND PORTION OF APRON.

2 AIP–03, 1999, CONSTRUCT PARALLEL, CONNECTING AND HANGAR ACCESS TAXIWAYS.

3 AIP–004, 2003, CONSTRUCT HANGAR TAXIWAY E (T–14); CRACK SEAL, FOG SEAL, AND REMARK ALL AIRCRAFT PAVEMENTS.

LEGEND

- 1994 SURVEY AREA (RECONSTRUCTED)
- 1997 SURVEY AREA (RECONSTRUCTED)
- 2000 SURVEY AREA (NOT SURVEYED)
- 2003 SURVEY AREA
- 2006 SURVEY AREA

DATE OF PAVEMENT STRENGTH SURVEY:	
EVALUATED BY:	
DATE OF MOST RECENT PAVEMENT CONDITION SURVEY:	JULY 26, 2006
EVALUATED BY:	B. BURKLAND

MONTANA AVIATION SYSTEM PLAN
2006 UPDATE - PAVEMENT CONDITION INDEXES

POLSON AIRPORT

PREPARED FOR: MONTANA AERONAUTICS DIVISION

POLSON MONTANA

DATE: NOV. 2006

PREPARED BY: ROBERT PECCIA & ASSOCIATES

POLSON