STEVENSVILLE

10/2/06

R-1, overview with bleeding

T-1, overview

T-4, surface detail

A-2, overview

STEVENSVILLE

10/2/06

A-1, surface detail with tiedown

STEVENSVILLE

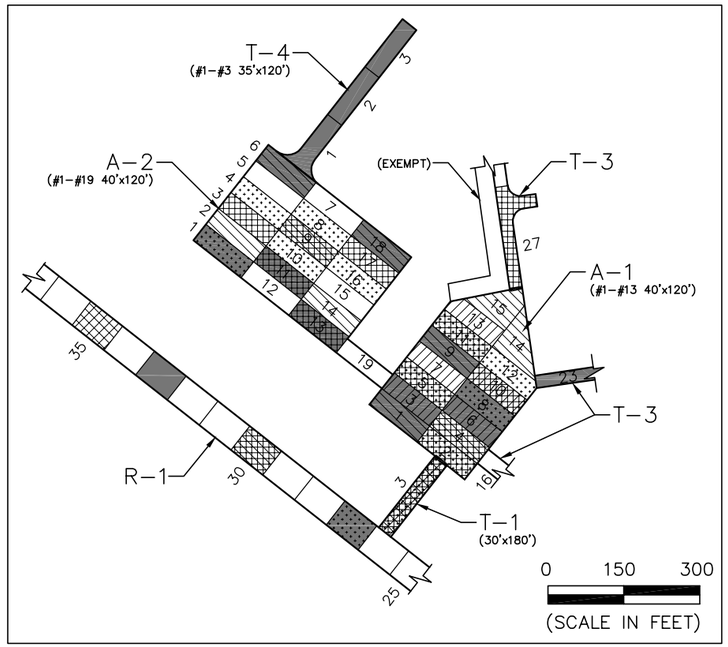

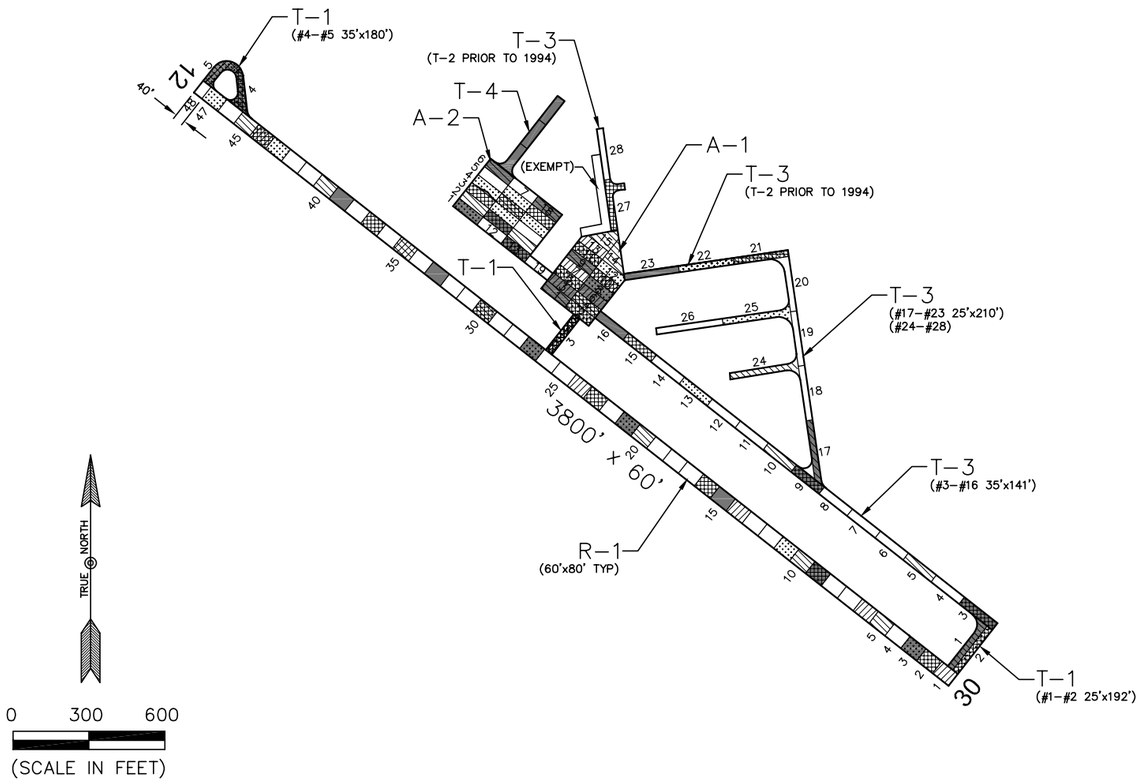

PAVEMENT STRENGTH SURVEY/PAVEMENT CONDITION SURVEY

PAVE. IDENT.	SOIL CLASS	SUB GRADE CLASS	SUBBASE COURSE	BASE COURSE	SURFACE COURSE	OVERLAY	PAVEMENT STRENGTH MAX. GROSS LOAD (LBS) SINGLE	DUAL	DUAL TAN.	REMARKS
RUNWAYS										
R–1	CBR=7.6			5.5" P–208	1.8" P–609	1" P–402	12,500			3
TAXIWAYS										
T–1	CBR=7.6			5.5" P–208	1.8" P–609	1" P–402	12,500			3
T–3			6" COMP.	6" P–208	2" P–401R		12,500			4
T–4			12" P–154	4" P–208	3" TYPE S–3		12,500			5
APRONS										
A–1	CBR=7.6			5.5" P–208	1.8" P–609	1" P–402	12,500			3
A–2			6" COMP.	6" P–208	2" P–401R					4

REMARKS:

1. ADAP–03, 1981, ORIGINAL CONSTRUCTION
2. SUBGRADE = CEMENTED SILTY GRAVEL AND HARD PAN.
3. AIP–01, OVERLAY RUNWAY, APRON, AND TAXIWAY.
4. AIP–02, 1994, CONSTRUCT PARTIAL PARALLEL TAXIWAY FOR RUNWAY 12–30, CONSTRUCT ACCESS TAXIWAY, AND EXPAND APRON.
5. AIP–004, 2003, CONSTRUCT TAXIWAY (T–4); CRACK SEAL, FOG SEAL, AND REMARK REMAINING PAVEMENTS.

LEGEND

- 1994 SURVEY AREA
- 1997 SURVEY AREA
- 2000 SURVEY AREA
- 2003 SURVEY AREA
- 2006 SURVEY AREA

DATE OF PAVEMENT STRENGTH SURVEY:	
EVALUATED BY:	
DATE OF MOST RECENT PAVEMENT CONDITION SURVEY:	OCT. 2, 2006
EVALUATED BY:	J. PICCONE

MONTANA AVIATION SYSTEM PLAN
2006 UPDATE - PAVEMENT CONDITION INDEXES

STEVENSVILLE AIRPORT

PREPARED FOR: MONTANA AERONAUTICS DIVISION

STEVENSVILLE MONTANA

DATE: NOV. 2006

PREPARED BY: ROBERT PECCIA & ASSOCIATES

STEVENSVILLE