THREE FORKS

9/3/06

A-1, surface detail with ravelling

T-2, surface detail with medium crack

A-2, overview

A-2, surface detail, shattered slab

THREE FORKS

9/3/06

T-2, overview with cracking

R-2, overview

R-2, grass on edge

R-2, gopher hole

THREE FORKS

9/3/06

A-1, surface detail

T-4, surface detail with void

T-1, surface detail

THREE FORKS

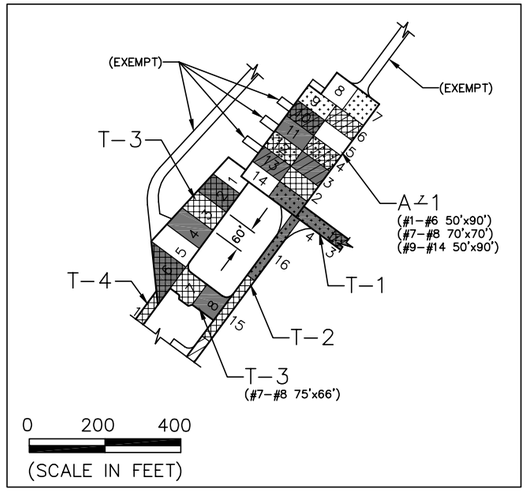

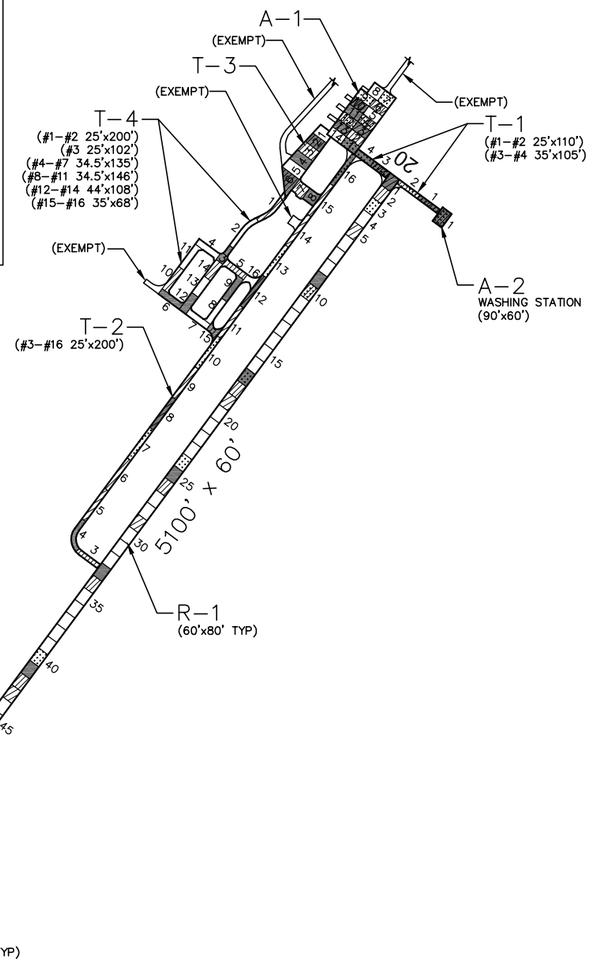

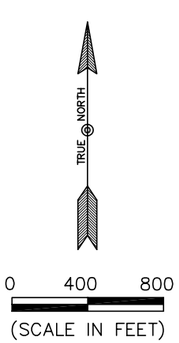

PAVEMENT STRENGTH SURVEY/PAVEMENT CONDITION SURVEY

PAVE. IDENT.	SOIL CLASS	SUB GRADE CLASS	SUBBASE COURSE	BASE COURSE	SURFACE COURSE	OVERLAY	PAVEMENT STRENGTH MAX. GROSS LOAD (LBS) SINGLE	DUAL	DUAL TAN.	REMARKS
RUNWAYS										
R–1	CBR=12			4" P–208	2.5" P–401	2" P–401	12,500			1 3
R–2			P–154	4" P–208	2.5" P–401	2" P–401	12,500			2 3
TAXIWAYS										
T–1	CBR=12			4" P–208	2.5" P–401	2" P–401	12,500			1
T–2			P–154	4" P–208	2.5" P–401	2" P–401	12,500			2
T–3			P–154	4" P–208	2.5" P–401	2" P–401	12,500			3
T–4				4" P–208	2.5" P–401		12,500			3
APRONS										
A–1	CBR=12			4" P–208	2.5" P–401	2" P–401	12,500			1 3
A–2					6" P–501		UNKNOWN			

REMARKS:

1. AIP–01, 1986, ALL PAVEMENTS ORIGINALLY BUILT.
2. AIP–02, 1993, CONSTRUCT RUNWAY EXTENSION AND PARTIAL PARALLEL TAXIWAY.
3. AIP–03, 2000, OVERLAY RUNWAY (R–1,R–2), APRON (A–1), AND TAXIWAYS (T–1,T–2,T–3); RECONSTRUCT TAXIWAY (T–4).

LEGEND

- 1994 SURVEY AREA
- 1997 SURVEY AREA
- 2000 SURVEY AREA (NOT SURVEYED)
- 2003 SURVEY AREA
- 2006 SURVEY AREA

DATE OF PAVEMENT STRENGTH SURVEY:	JUNE 8, 1990
EVALUATED BY:	J. STYBA
DATE OF MOST RECENT PAVEMENT CONDITION SURVEY:	SEPT. 3, 2006
EVALUATED BY:	B. BURKLAND

MONTANA AVIATION SYSTEM PLAN
2006 UPDATE - PAVEMENT CONDITION INDEXES

THREE FORKS AIRPORT

PREPARED FOR: MONTANA AERONAUTICS DIVISION

THREE FORKS MONTANA

DATE: NOV. 2006

PREPARED BY: ROBERT PECCIA & ASSOCIATES

THREE FORKS