WOLF POINT

7/12/06

R-1, surface detail with weathering

R-1, crack with spaling

R-2, overview

R-4, surface detail with crack & depression

WOLF POINT

7/12/06

T-2, crack, bleeding & depression

T-3, edge failure

A-5, depression & patch

T-4, patched crack with depression

WOLF POINT

7/12/06

T-1, surface detail with crack & depression

WOLF POINT

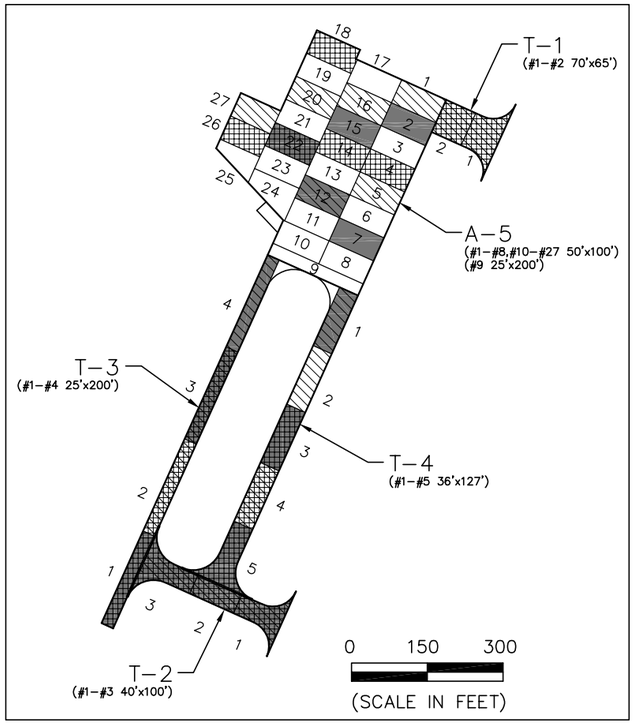

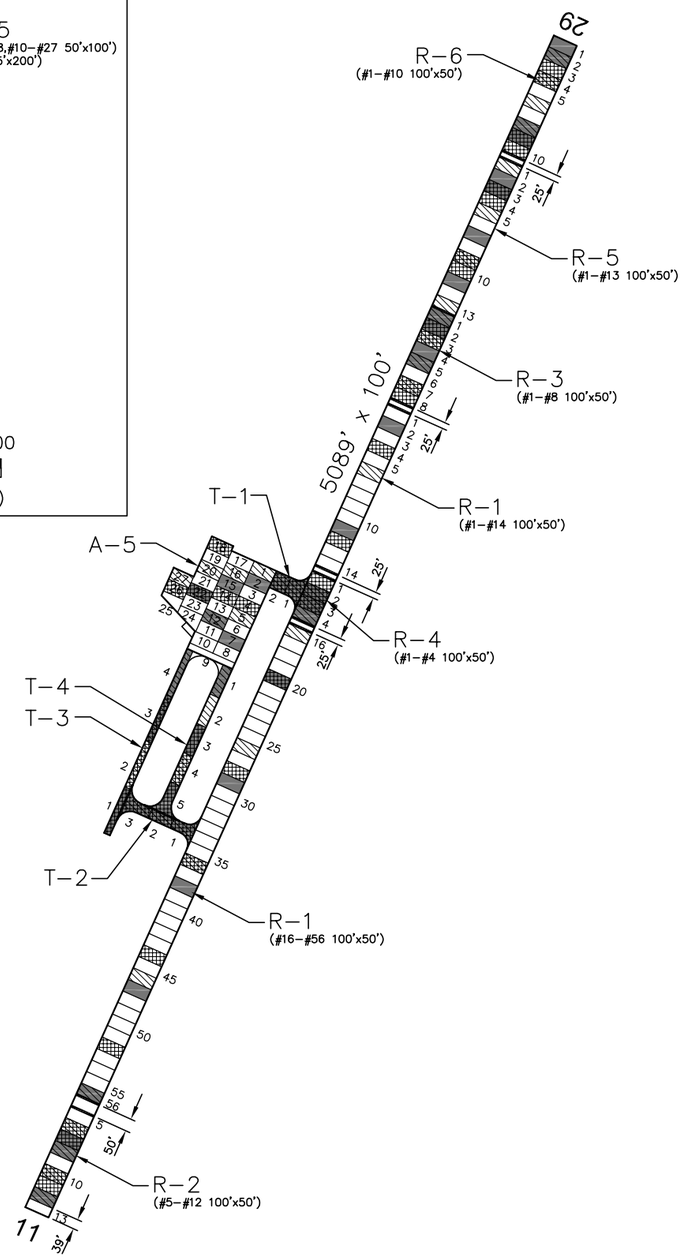

TRUE NORTH

0 300 600

(SCALE IN FEET)

PAVEMENT STRENGTH SURVEY/PAVEMENT CONDITION SURVEY

PAVE. IDENT.	SOIL CLASS	SUB GRADE CLASS	SUBBASE COURSE	BASE COURSE	SURFACE COURSE	OVERLAY	PAVEMENT STRENGTH MAX. GROSS LOAD (LBS) SINGLE	DUAL	DUAL TAN.	REMARKS
RUNWAYS										
R-1	E-8	F8	3" SAND	10" P-208	2" BIT	1" BL, 2" P-401 .25" P-609	47,000	56,000		<1
						P-609 SBST .25" P-609, 1" P-402				<4 <6
R-2	E-8	F8	3" SAND	12.5" P-208	2" BIT	1" BL, 3" P-401 .25" P-609	42,000	54,000		<1
						P-609 SBST .25" P-609, 1" P-402				<4 <6
R-3	E-8	F8	3" SAND	12.5" P-208	2" BIT	1" BL, 2" P-401 1.5" P-201, .25" P-609	57,000	70,000		<1 <3
						P-609 SBST 1" P-402				<4 <6
R-4	E-8	F8	3" SAND	12.5" P-208	2" BIT	1" BL, 3" P-401 .25" P-609	42,000	53,000		<1
						P-609 SBST .25" P-609, 1" P-402				<4 <6
R-5	E-7	F7	7" GRAVEL	4" BIT	2" BIT	P-609 SBST 1.5" P-201, .25" P-609	43,000	55,000		<1 <3
						P-609 1.5" P-201 .25" P-609, 1" P-402				<2 <3 <4 <6
R-6	E-7	F7	9" GRAVEL	4.5" BIT	2" BIT	P-609 SBST .25" P-609	38,000	50,000		<2 <3
						P-609 1.5" P-201 .25" P-609				
						1.5" P-201 .25" P-609, 1" P-402				<3 <4 <6
TAXIWAYS										
T-1	E-8	F8	3" SAND	12.5" P-208	PBT	1" BL, 3" P-401 .25" P-609	38,000	48,000		<4 <6
						P-609 SBST .25" P-609				
T-2	E-10	F10		5" P-209	6" P-401	3" P-401 .25" P-609	12,500	12,500		<4 <6
T-3	E-7	F7	8" P-154	2" P-208	2.5" P-201		12,500			
T-4	E-10	F10		15" P-208	3" P-401		18,000			<4 <5 <6
APRONS										
A-5	E-8	F8		15" P-208	3" P-401		18,000			<4 <5 <6

REMARKS:

1" B.L. INDICATED IN OVERLAY IS 1" BITUMINOUS LEVELING COURSE, ½" THICKNESS CONSIDERED FOR STRENGTH.

1> SURFACE COURSE CONSISTED OF AN ORIGINAL PBT IN 1957 PLUS 1" OVERLAY IN 1964.

2> SINGLE APPLICATION BITUMINOUS SURFACE TREATMENT WITH PRIOR LEVEL-UP COURSE.

3> 1984, 1.5" P-201 APPLIED TO CENTER 50' ONLY.

4> AIP-02, 1994, REHABILITATE RUNWAY 11-29, RELOCATE PARTIAL PARALLEL TAXIWAY, REHABILITATE CONNECTING TAXIWAY, RECONSTRUCT APRON.

5> 15" OF BASE COURSE IS 11" OF UNCRUSHED AND 4" OF CRUSHED; SOIL SEPARATION FABRIC BETWEEN SUBGRADE AND BASE COURSE.

6> AIP-003, 2001, CRACK SEAL, FOG SEAL, AND REMARK ALL PAVEMENTS.

LEGEND

- 1994 SURVEY AREA (NOT SURVEYED)
- 1997 SURVEY AREA (NOT SURVEYED)
- 2000 SURVEY AREA
- 2003 SURVEY AREA
- 2006 SURVEY AREA

DATE OF PAVEMENT STRENGTH SURVEY:	JUNE 22, 1967
EVALUATED BY:	W. MOORE
DATE OF MOST RECENT PAVEMENT CONDITION SURVEY:	JULY 12, 2006
EVALUATED BY:	B. BURKLAND

MONTANA AVIATION SYSTEM PLAN
2006 UPDATE - PAVEMENT CONDITION INDEXES

LYMAN CLAYTON AIRPORT

PREPARED FOR: MONTANA AERONAUTICS DIVISION ORO Y PLATA

WOLF POINT
MONTANA

DATE: NOV. 2006

PREPARED BY: ROBERT PECCIA & ASSOCIATES

WOLF POINT